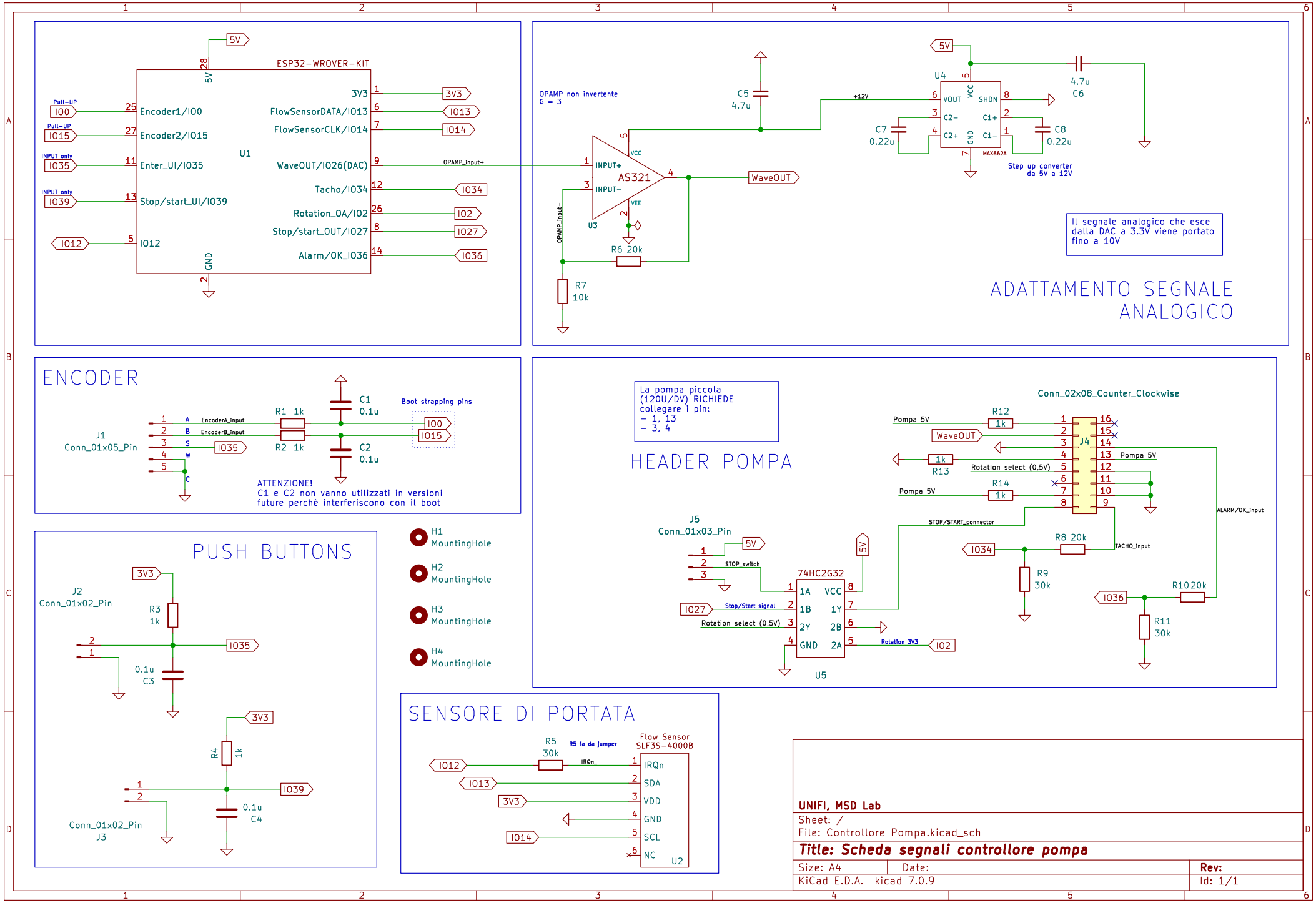

UNIFI, MSD Lab

Sheet: /

File: Controllore Pompa.kicad_sch

Title: Scheda segnali controllore pompa

Size: A4	Date:	**Rev:**
KiCad E.D.A. kicad 7.0.9		Id: 1/1