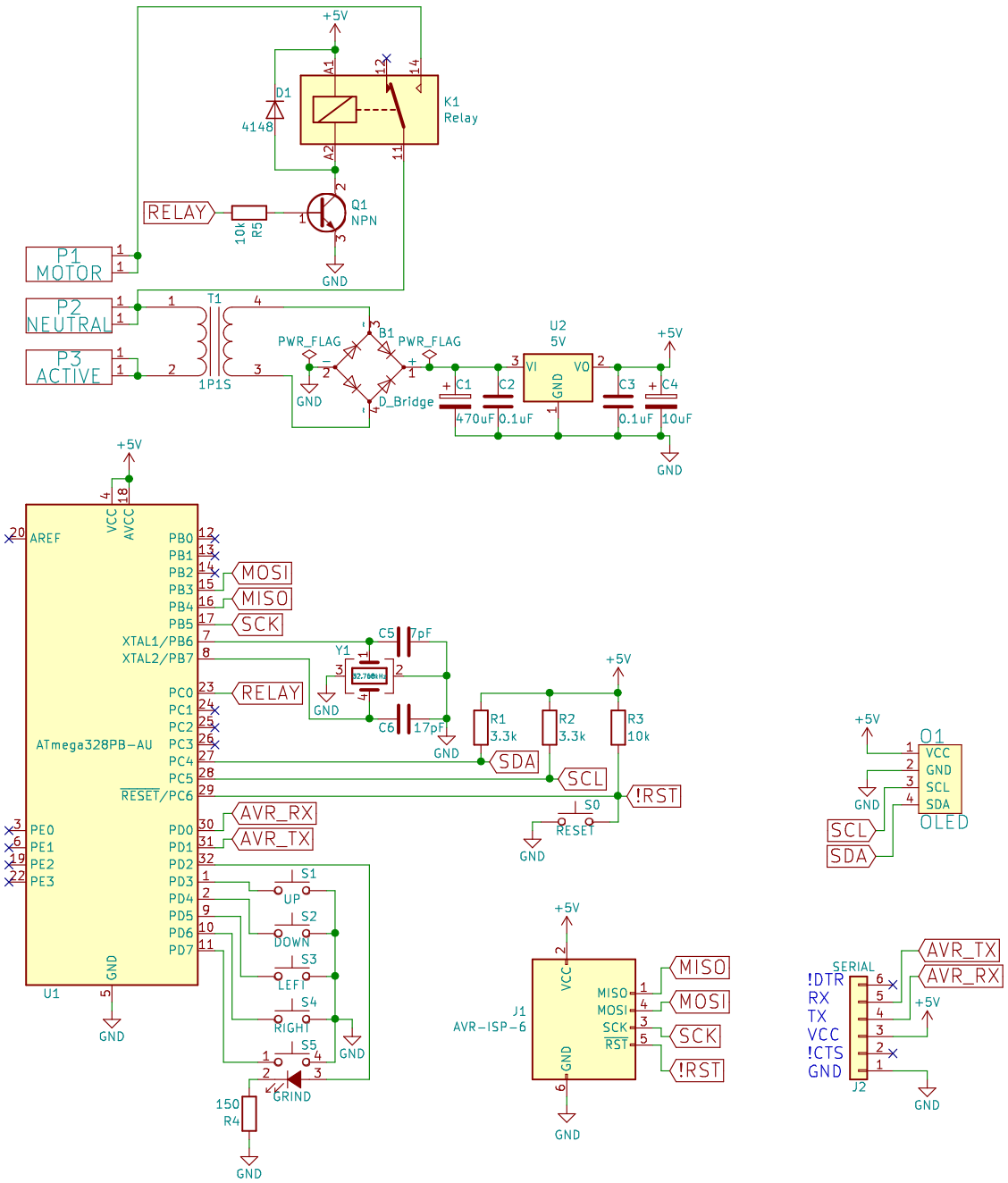

BOM

B1 – DF04S – Bridge Rectifier
C1 – EMVY160ADA471MHA0G – 470uF Electrolytic Capacitor
C2 – 0.1uF 1206 Ceramic Capacitor
C3 – 0.1uF 1206 Ceramic Capacitor
C4 – MCESL35V106M5X5.2 – 10uF Electrolytic Capacitor
C5 – 7pF 1206 Ceramic Capacitor
C6 – 17pF 1206 Ceramic Capacitor
D1 – T4 1N4148W SOD-123 Diode
J1 – 6-Pin (2x3) ISP Header
J2 – 6-Pin (1x6) Serial Header
K1 – SRM-1C-SL-5VDC – Relay
O1 – OLED Display w/ SH1106 Driver in I2C Mode
P1 – 19708-4001 – PCB-Mount Spade Terminal
P2 – 19708-4001 – PCB-Mount Spade Terminal
P3 – 19708-4001 – PCB-Mount Spade Terminal
Q1 – PBSS4350Z – NPN Transistor
R1 – 1.8k Ohm 1206 Resistor
R2 – 1.8k Ohm 1206 Resistor
R3 – 10k Ohm 1206 Resistor
R4 – 150 Ohm 1206 Resistor
R5 – 10k Ohm 1206 Resistor
S0 – PTS645SM43SMTR92LFS – Surface Mount 6mm Tact Switch
S1 – 3FSH9 – Surface Mount Tact Switch
S2 – 3FSH9 – Surface Mount Tact Switch
S3 – 3FSH9 – Surface Mount Tact Switch
S4 – 3FSH9 – Surface Mount Tact Switch
S5 – 5GSH93561 – Surface Mount Tact Switch w/ LED
T1 – 44121 – 6V Transformer
U1 – ATMEGA328PB – Microcontroller
U2 – NCP1117 – 5V 1A LDO Linear Regulator
Y1 – FSRLF – 32.768kHz Crystal

refer to:
https://clews.pro/projects/grinder_timer
https://gitlab.com/clewsy/grinder_timer

Sheet: /
File: grinder_timer.sch

Title: grinder_timer_schematic

Size: A4	Date:	Rev: 2
KiCad E.D.A. kicad 5.1.5+dfsg1-2build2		Id: 1/1