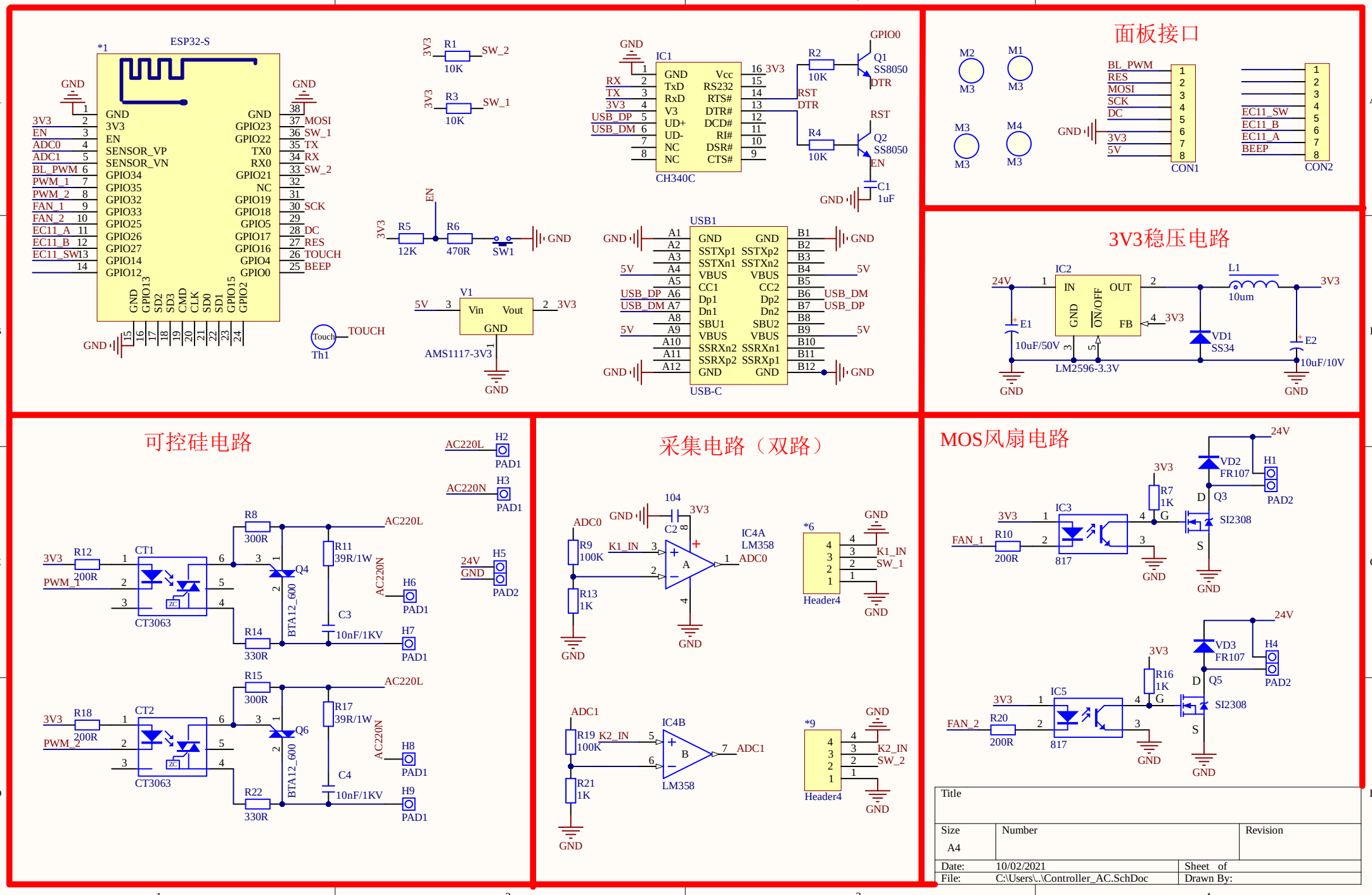
ESP32-S
*1
GND
3V3
EN
ADC0
ADC1
BL_PWM
PWM_1
PWM_2
FAN_1
FAN_2
EC11_A
EC11_B
EC11_SW
GND
3V3
EN
SENSOR_VP
SENSOR_VN
GPIO34
GPIO35
GPIO32
GPIO33
GPIO25
GPIO26
GPIO27
GPIO14
GPIO12
GND
GPIO23
GPIO22
TX0
RX0
GPIO21
NC
GPIO19
GPIO18
GPIO5
GPIO17
GPIO16
GPIO4
GPIO0
MOSI
SW_1
TX
RX
SW_2
SCK
DC
RES
TOUCH
BEEP
GND GPIO13 SD2 SD3 CMD CLK SD0 SD1 GPIO15 GPIO2
Touch
Th1
R1 10K SW_2
R3 10K SW_1
R5 12K
R6 470R
SW1
V1
Vin Vout GND
AMS1117-3V3
IC1
CH340C
GND TxD RxD V3 UD+ UD- NC NC
Vcc RS232 RTS# DTR# DCD# RI# DSR# CTS#
R2 10K
R4 10K
Q1 SS8050
Q2 SS8050
C1 1uF
USB1
USB-C
GND SSTXp1 SSTXn1 VBUS CC1 Dp1 Dn1 SBU1 VBUS SSRXn2 SSRXp2 GND
GND SSTXp2 SSTXn2 VBUS CC2 Dp2 Dn2 SBU2 VBUS SSRXn1 SSRXp1 GND
USB_DP
USB_DM
面板接口
M1
M2
M3
M4
BL_PWM
RES
MOSI
SCK
DC
3V3
5V
CON1
EC11_SW
EC11_B
EC11_A
BEEP
CON2
3V3稳压电路
IC2
IN OUT GND ON/OFF FB
24V
E1 10uF/50V
L1 10um
VD1 SS34
E2 10uF/10V
LM2596-3.3V
可控硅电路
AC220L
AC220N
H2 PAD1
H3 PAD1
H5 PAD2
R8 300R
R11 39R/1W
R12 200R
CT1
CT3063
Q4
BTA12_600
C3 10nF/1KV
R14 330R
H6 PAD1
H7 PAD1
R15 300R
R17 39R/1W
R18 200R
CT2
Q6
C4 10nF/1KV
R22 330R
H8 PAD1
H9 PAD1
采集电路（双路）
104
C2
IC4A LM358
ADC0
K1_IN
R9 100K
R13 1K
*6
Header4
K1_IN
SW_1
ADC1
K2_IN
R19 100K
R21 1K
IC4B
LM358
*9
K2_IN
SW_2
MOS风扇电路
24V
VD2 FR107
H1 PAD2
R7 1K
IC3
Q3
SI2308
R10 200R
817
VD3 FR107
H4 PAD2
R16 1K
IC5
Q5
R20 200R
Title
Size A4
Number
Revision
Date: 10/02/2021
Sheet of
File: C:\Users\..\Controller_AC.SchDoc
Drawn By:

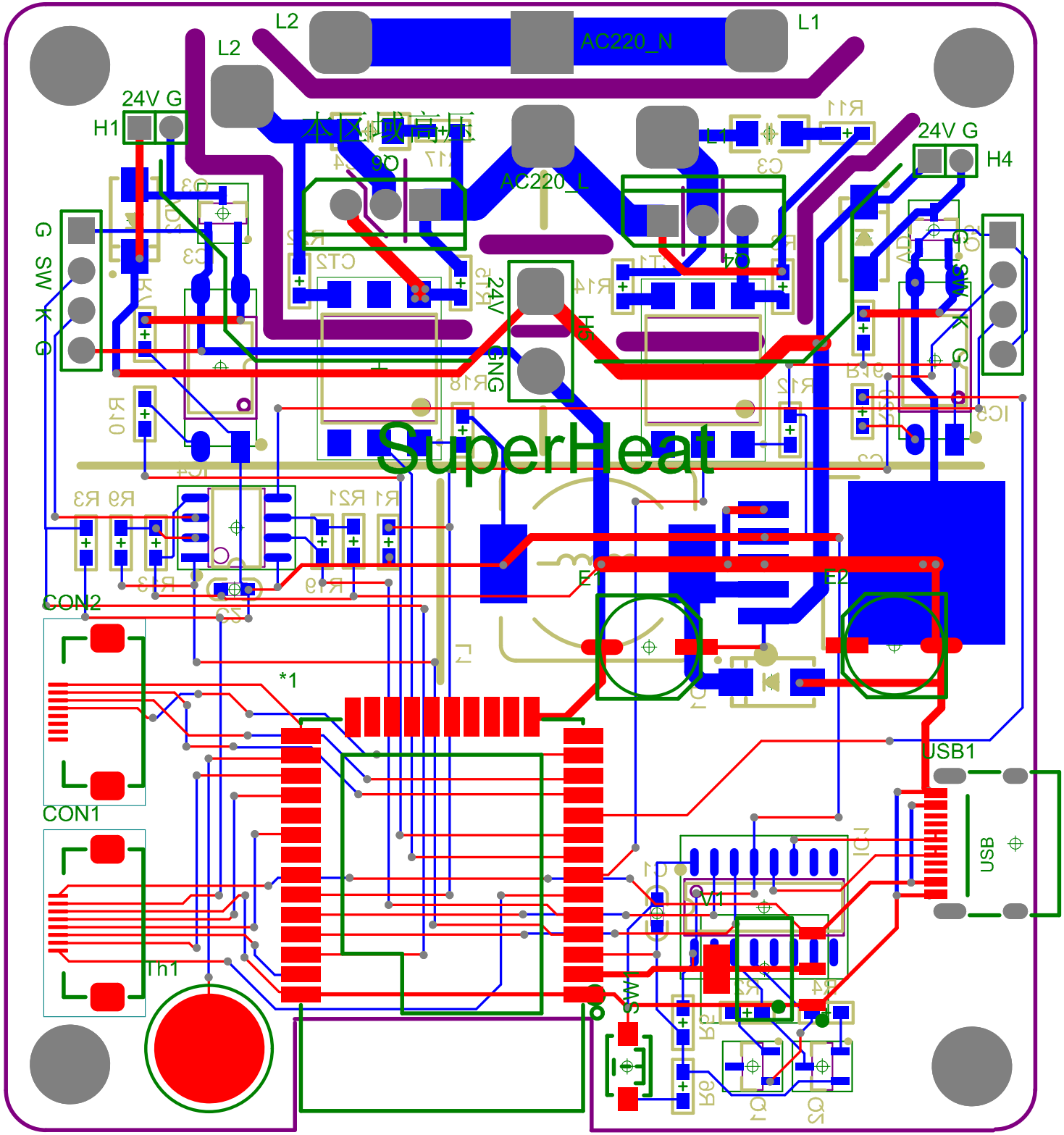
L2
L2
AC220_N
L1
24V G
H1
本区域高压
AC220_L
24V G
H4
G
SW
K
G
24V
GNG
H6
SuperHeat
CON2
*1
E1
E2
CON1
USB1
USB
Th1
SW1