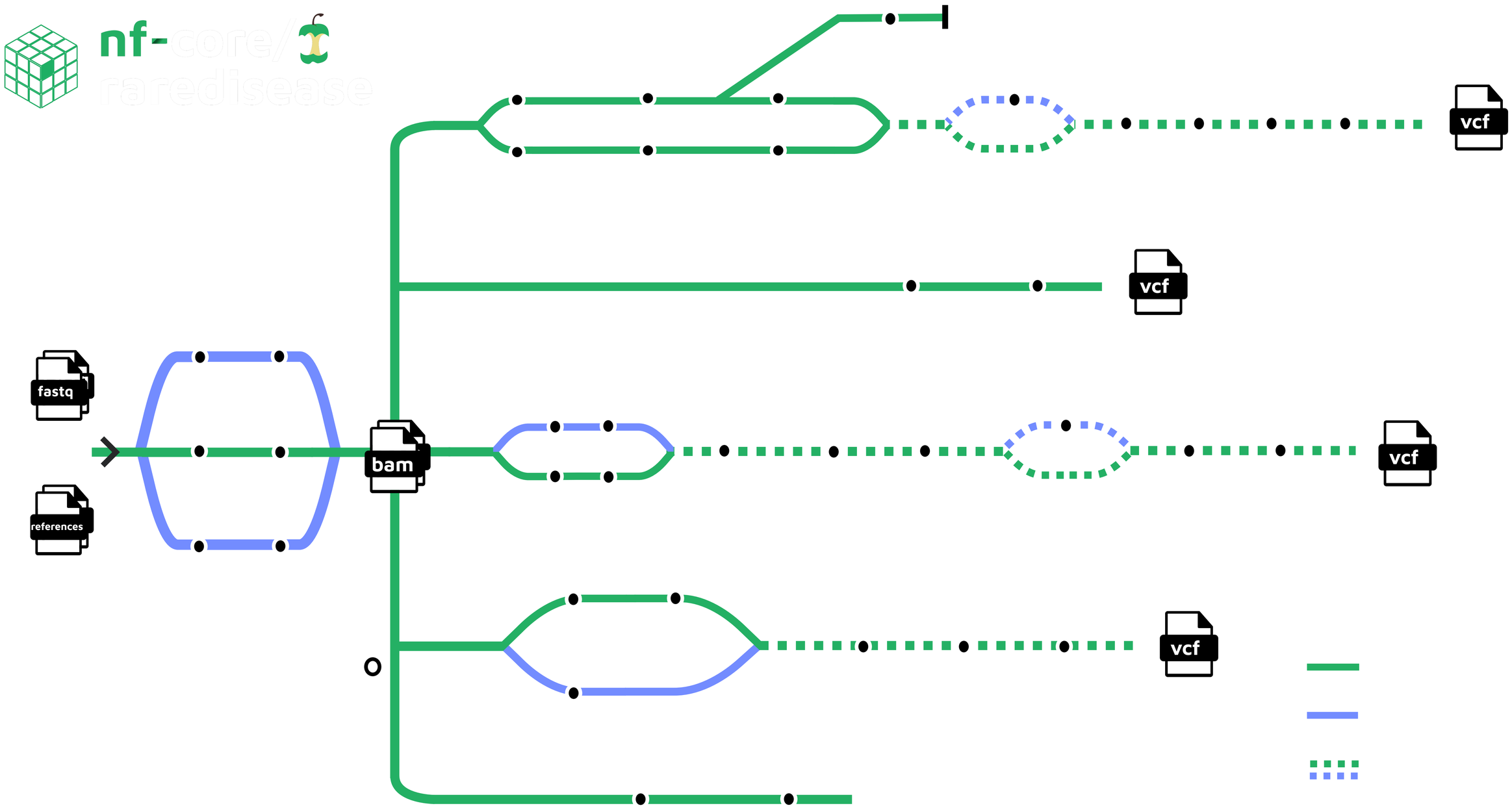
nf-core/
raredisease
fastq
references
bam
vcf
vcf
vcf
vcf