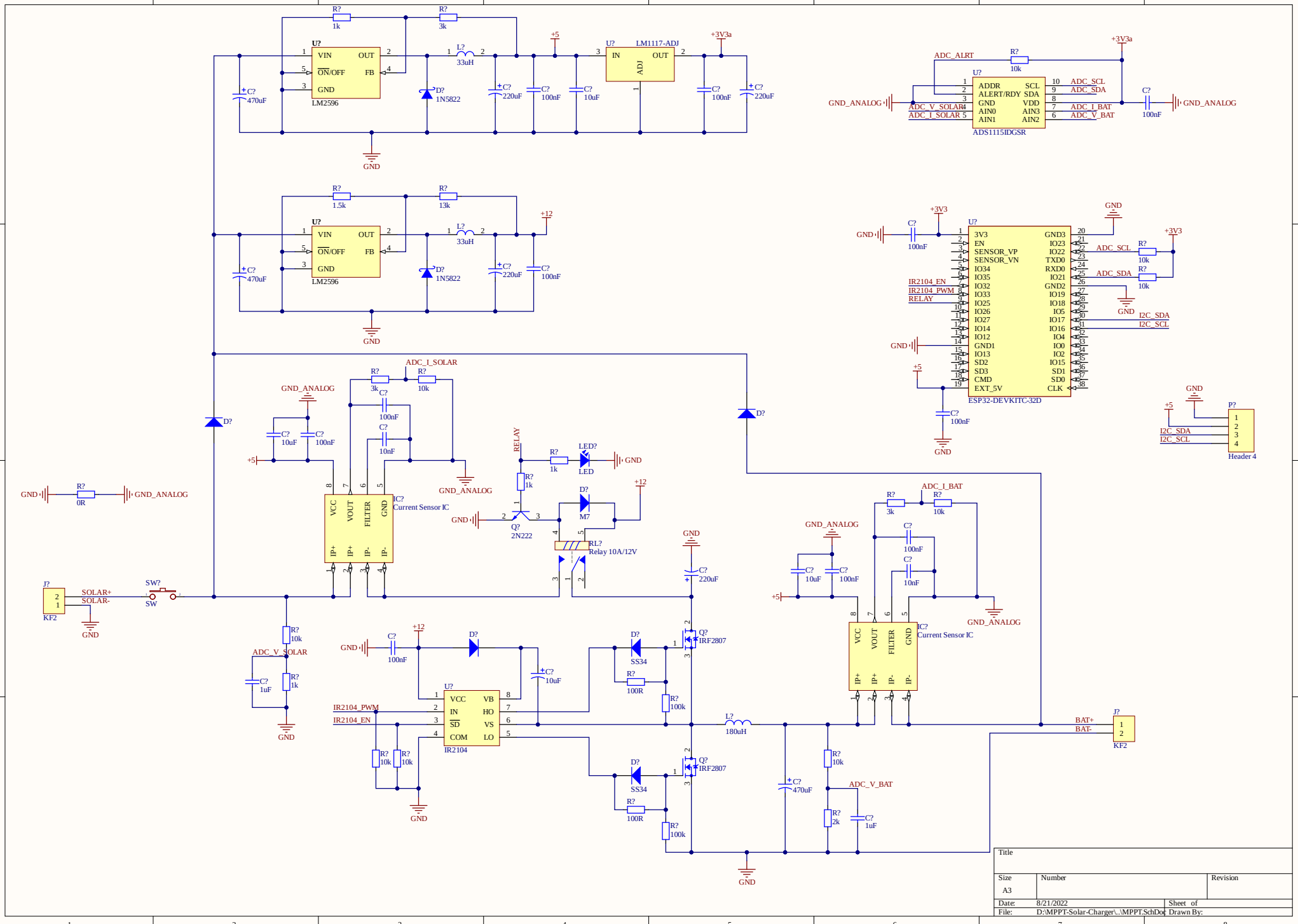
LM2596
LM1117-ADJ
ADS1115IDGSR
ESP32-DEVKITC-32D
Current Sensor IC
IR2104
IRF2807
SS34
Relay 10A/12V
Header 4
KF2
Title
Size
A3
Number
Revision
Date: 8/21/2022
Sheet of
File: D:\MPPT-Solar-Charger\..\MPPT.SchDoc
Drawn By: