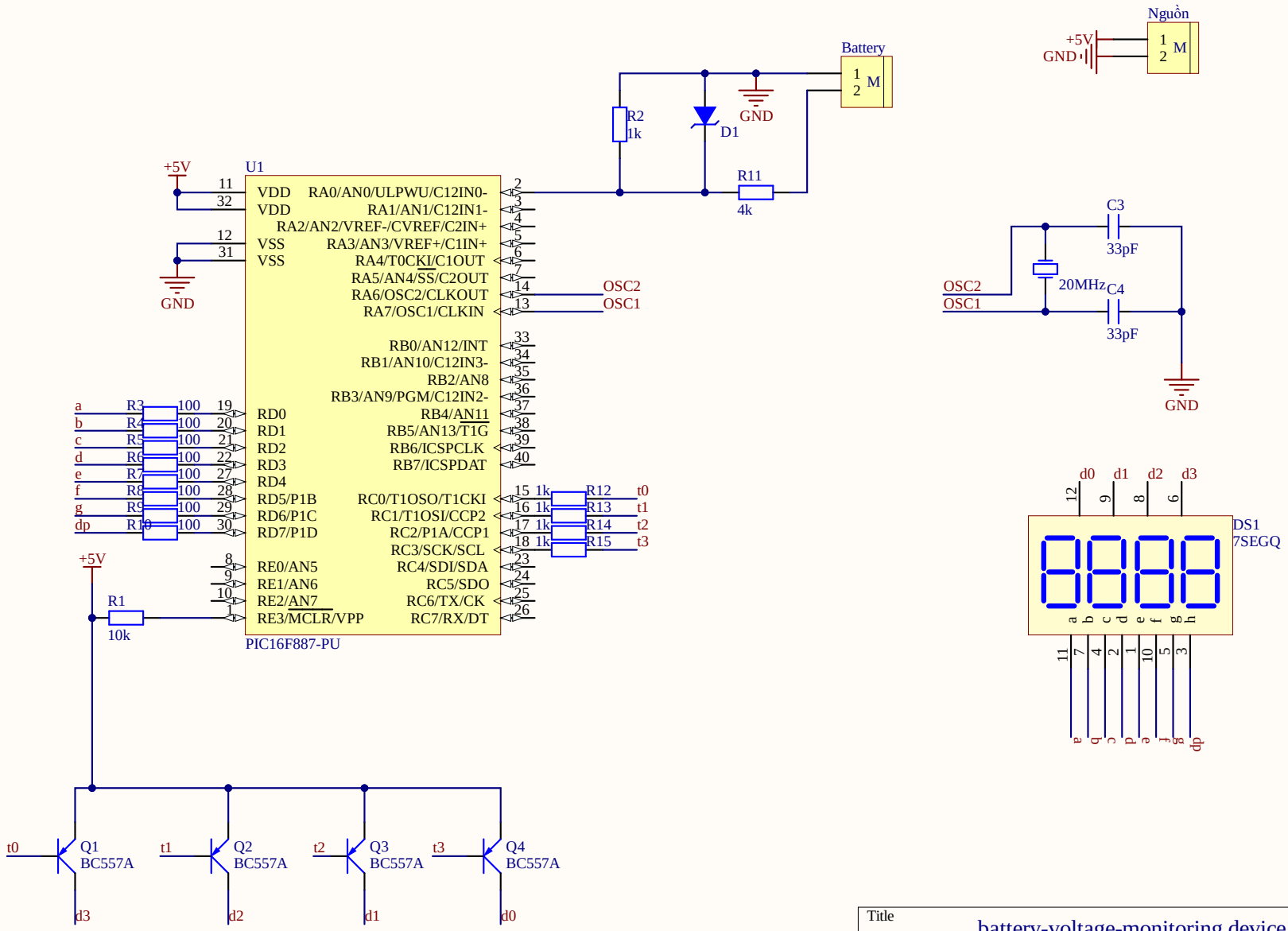

Title	battery-voltage-monitoring device	
Size A	Number	Revision 1.0
Date: 7/07/2022		Sheet of
File: C:\Users\..\Voltage-Monitor.SchDoc		Drawn By: Nam Phan