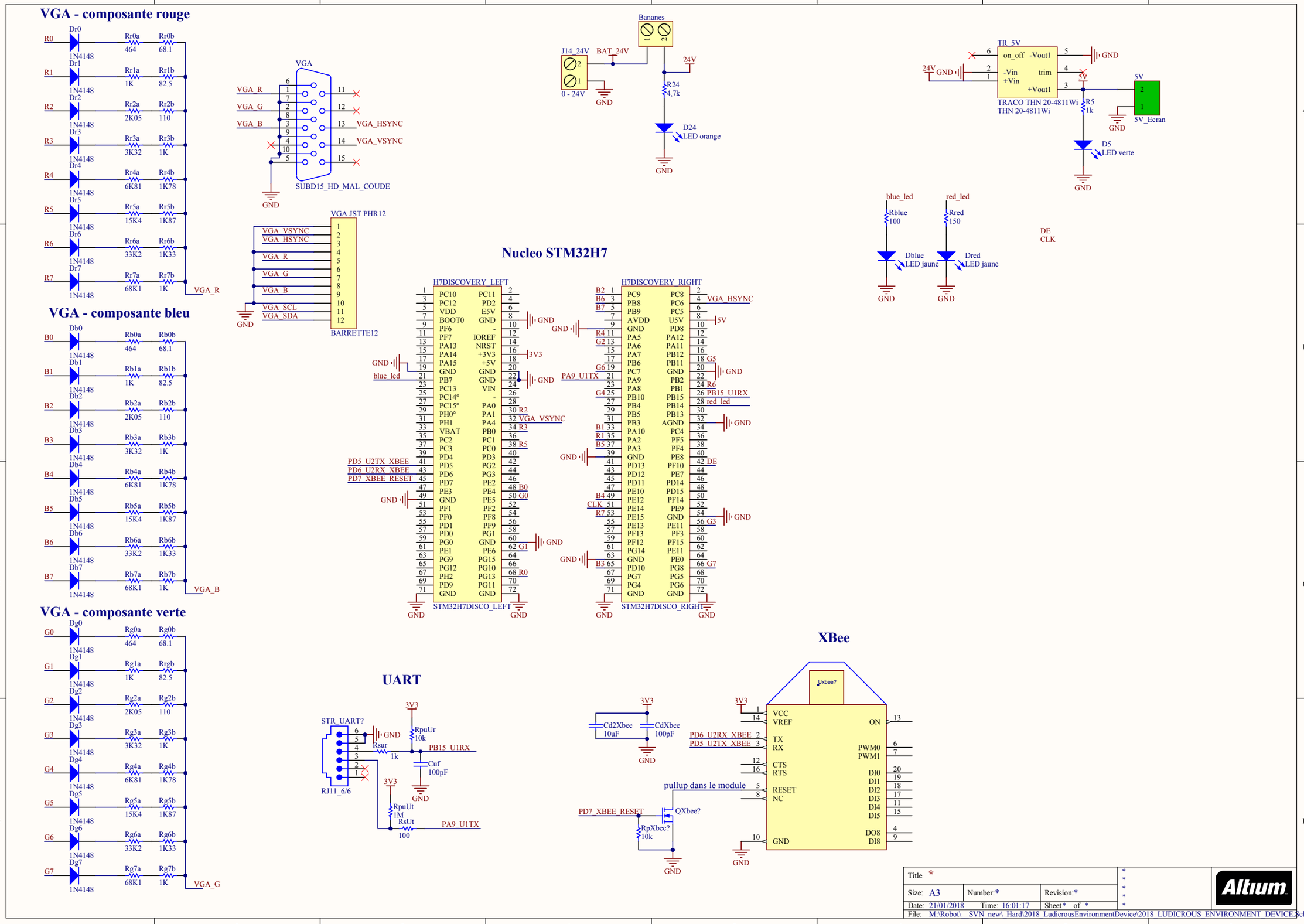
VGA - composante rouge
VGA - composante bleu
VGA - composante verte
VGA
SUBD15_HD_MAL_COUDE
VGA JST PHR12
BARRETTE12
Nucleo STM32H7
H7DISCOVERY_LEFT
H7DISCOVERY_RIGHT
STM32H7DISCO_LEFT
STM32H7DISCO_RIGHT
UART
STR_UART?
RJ11_6/6
XBee
Uxbee?
pullup dans le module
QXbee?
Bananes
J14_24V
BAT_24V
0 - 24V
D24
LED orange
TR_5V
TRACO THN 20-4811Wi
THN 20-4811Wi
5V_Ecran
D5
LED verte
blue_led
red_led
Dblue
LED jaune
Dred
LED jaune
DE
CLK
Title *
Size: A3
Number:*
Revision:*
Date: 21/01/2018
Time: 16:01:17
Sheet * of *
File: M:\Robot\ SVN_new\ Hard\2018 LudicrousEnvironmentDevice\2018 LUDICROUS ENVIRONMENT DEVICE.SchDoc
Altium

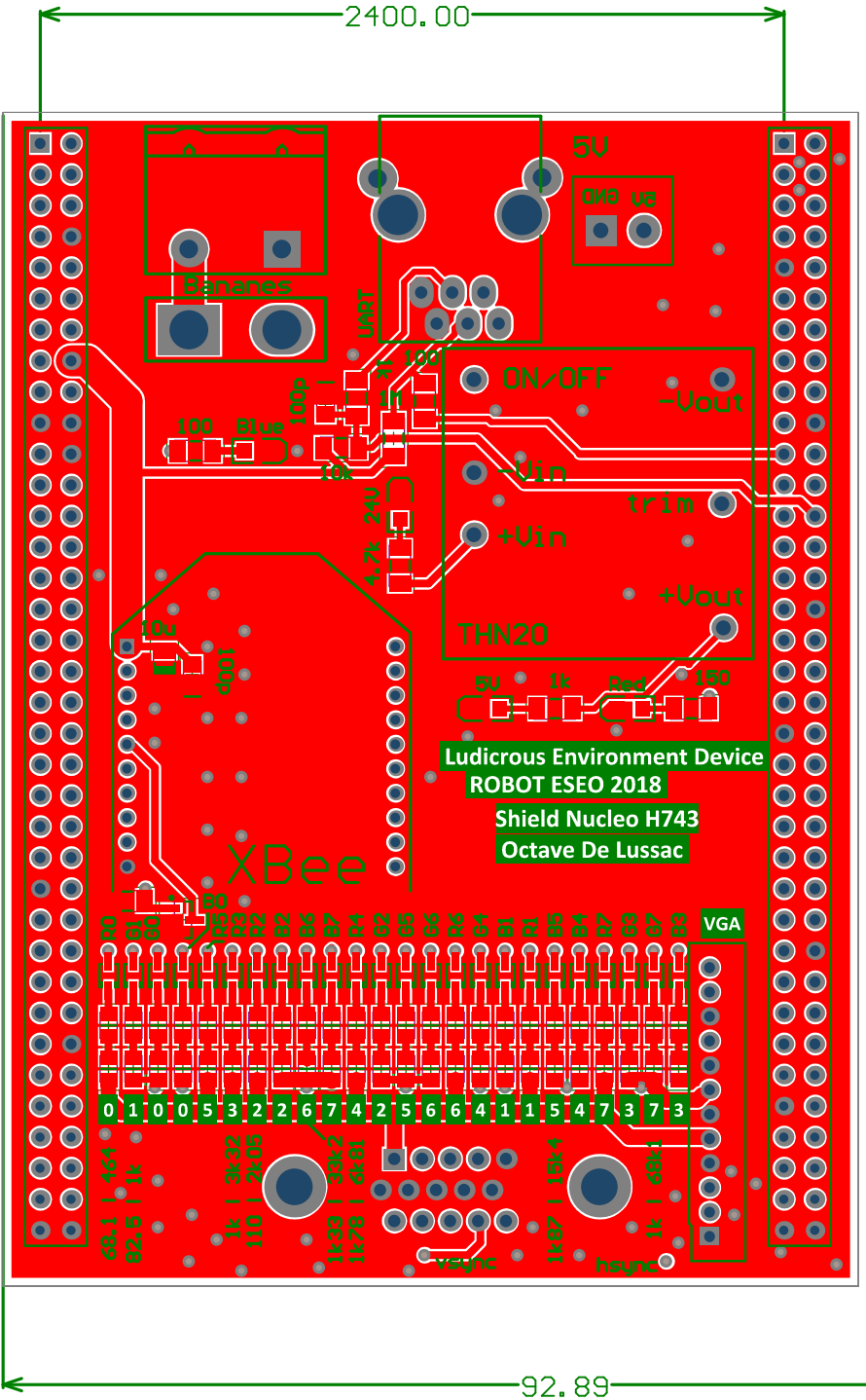
2400.00
5V
GND
UART
100
100p
100
Blue
10k
ON/OFF
-Vout
-Vin
trim
+Vin
+Vout
THN20
24V
4.7k
10u
100p
5V
1k
Red
150
Ludicrous Environment Device
ROBOT ESEO 2018
Shield Nucleo H743
Octave De Lussac
XBee
VGA
vsync
hsync
92.89

2400.00
GND
24V
GND
24V
GND
5V
92.89
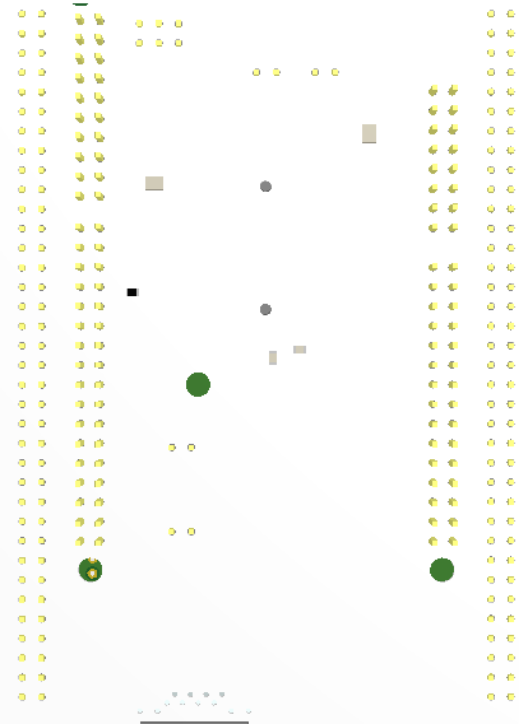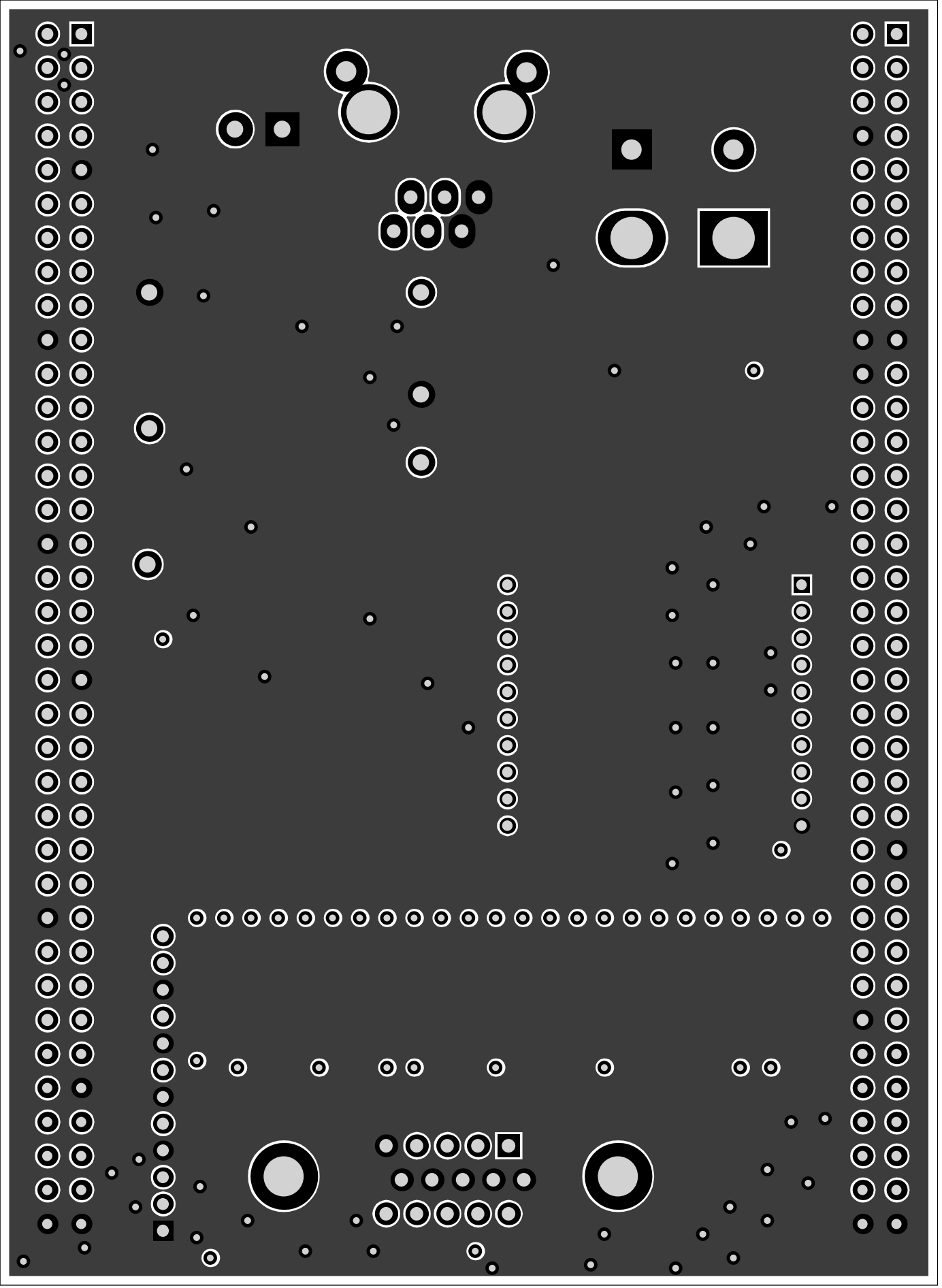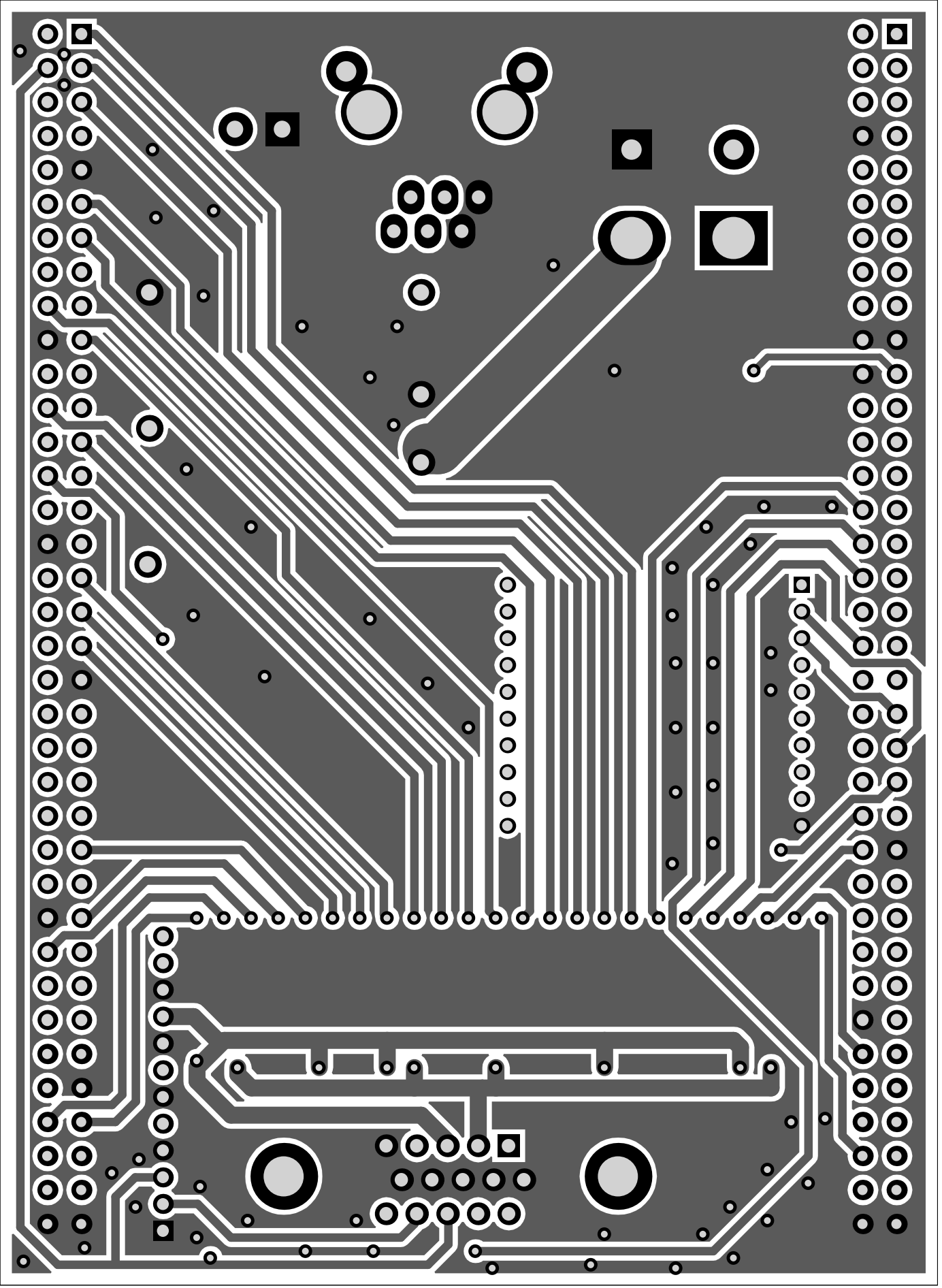
Bananes
UART
XBee
PRO
Ludicrous Environment Device
ROBOT ESEO 2018
Shield Nucleo H743
Octave De Lussac
VGA
-Vout
trim
+Vout
THN20
100
B1
1M
10k
24V
4.7k
15D
vsync
hsync