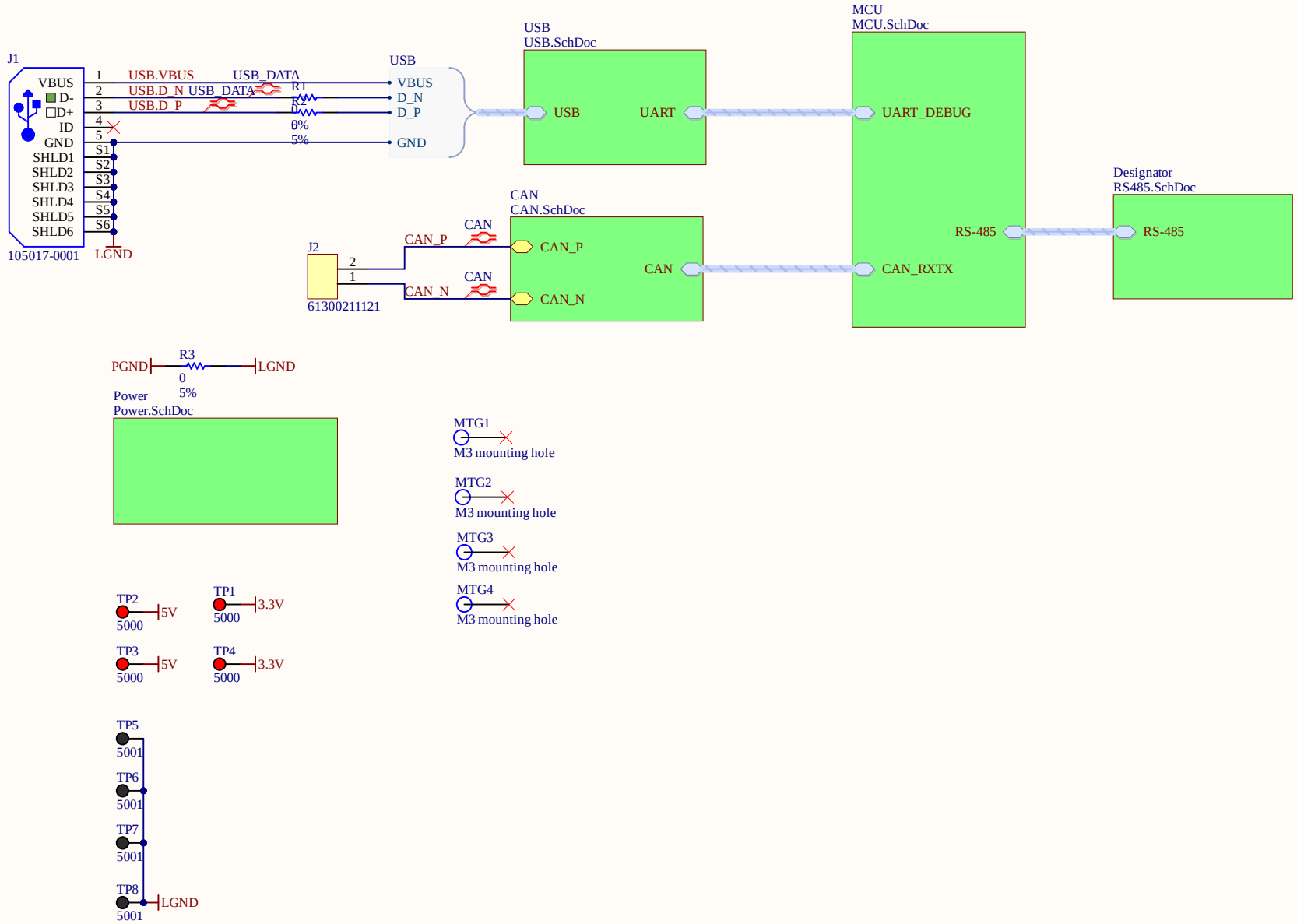

Title: *OmniTiles.SchDoc*			
Desc:			
Size: Letter	Auth: *	Proj: OmniTiles_MCU_BLE_DEV.PrjPcb	
VCS: Not in version control			
Date: 3/25/2026 8:49:42 PM	AD Ver.	Doc. *	Sheet 1 of 6
File: OmniTiles.SchDoc			

PENN ELECTRIC RACING
www.pennelectricracing.com
Confidential and Proprietary

Penn Engineering
University of Pennsylvania
www.seas.upenn.edu

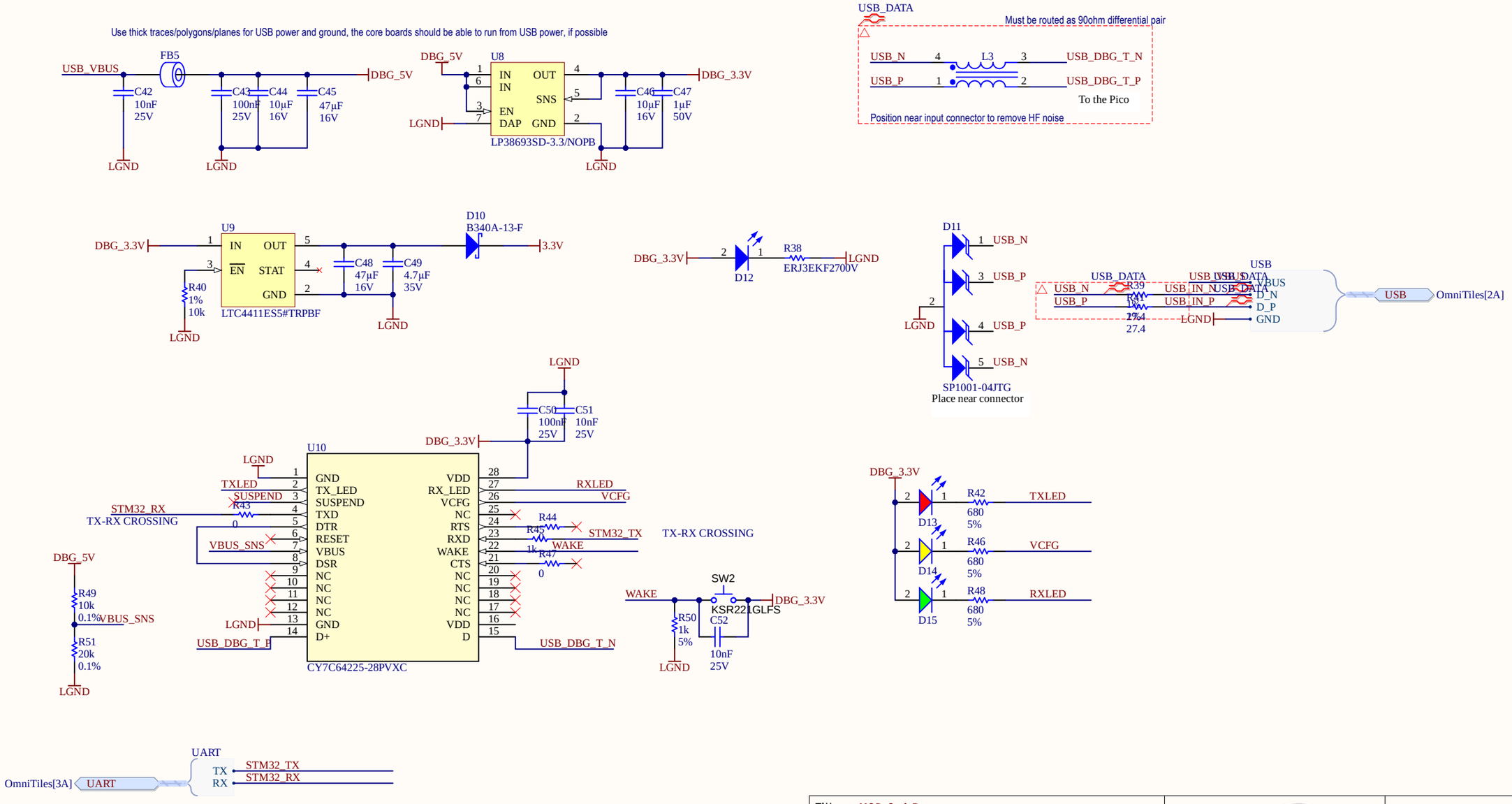

Title: *USB.SchDoc*			
Desc:			
Size: Legal	Auth: *	Proj: OmniTiles_MCU_BLE_DEV.PrjPcb	PENN ELECTRIC RACING / Penn Engineering
Date: 3/25/2026 8:49:42 PM		Sheet 2 of 6	www.pennelectricracing.com / www.seas.upenn.edu
File: USB.SchDoc			

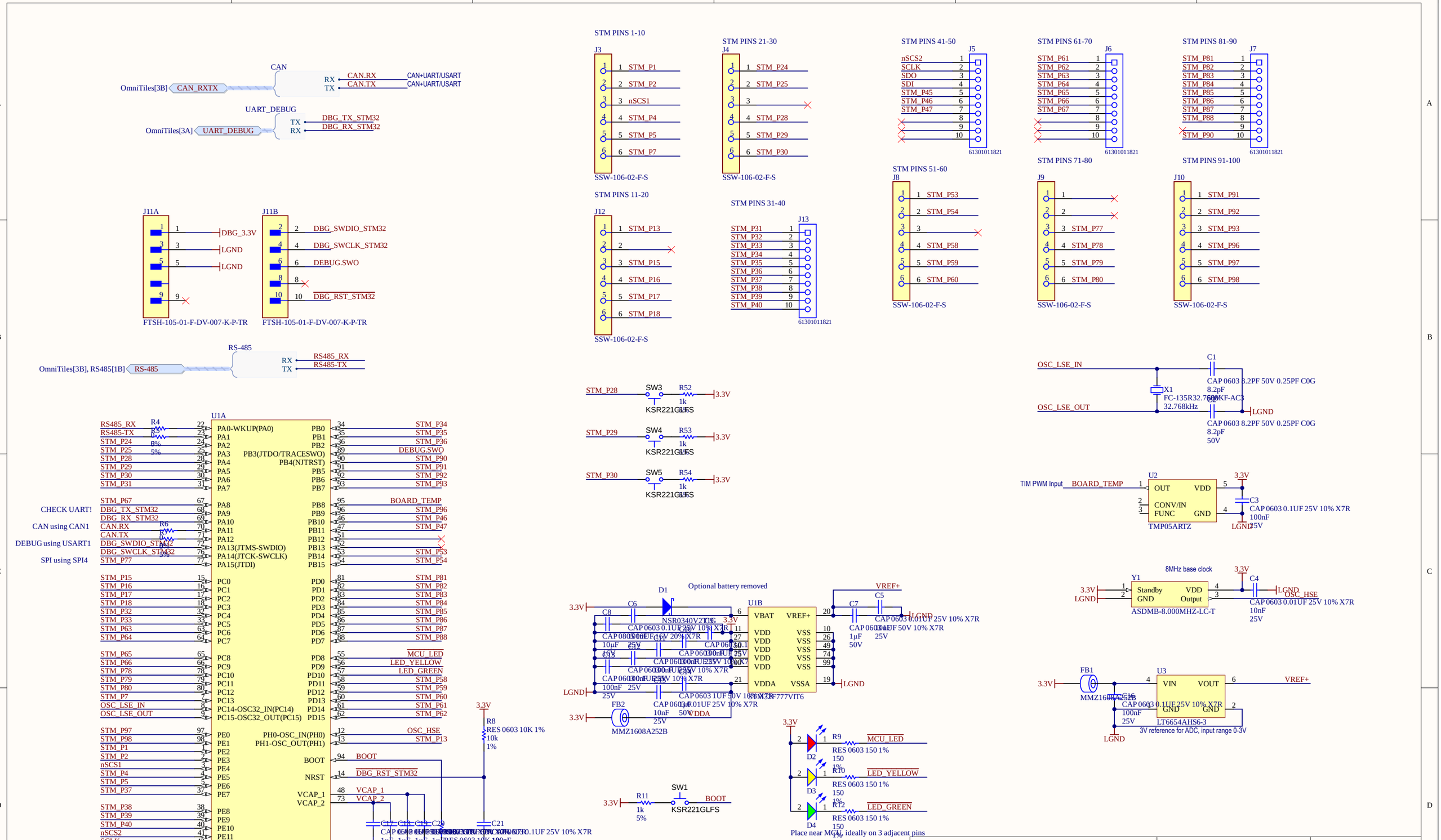
CAN
OmniTiles[3B] CAN_RXTX
RX CAN.RX CAN+UART/USART
TX CAN.TX CAN+UART/USART
UART_DEBUG
OmniTiles[3A] UART_DEBUG
TX DBG_TX_STM32
RX DBG_RX_STM32
J11A
J11B
DBG_3.3V
LGND
LGND
DBG_SWDIO_STM32
DBG_SWCLK_STM32
DEBUG.SWO
DBG_RST_STM32
FTSH-105-01-F-DV-007-K-P-TR
FTSH-105-01-F-DV-007-K-P-TR
RS-485
OmniTiles[3B], RS485[1B] RS-485
RX RS485_RX
TX RS485-TX
U1A
STM32F777VIT6
CHECK UART!
CAN using CAN1
DEBUG using USART1
SPI using SPI4
BOOT
DBG_RST_STM32
VCAP_1
VCAP_2
OSC_HSE
STM_P13
BOARD_TEMP
MCU_LED
LED_YELLOW
LED_GREEN
STM_P58
STM_P59
STM_P60
STM_P61
STM_P62
STM_P34
STM_P35
STM_P36
DEBUG.SWO
STM_P90
STM_P91
STM_P92
STM_P93
STM_P96
STM_P46
STM_P47
STM_P53
STM_P54
STM_P81
STM_P82
STM_P83
STM_P84
STM_P85
STM_P86
STM_P87
STM_P88
STM PINS 1-10
J3
SSW-106-02-F-S
STM PINS 21-30
J4
SSW-106-02-F-S
STM PINS 41-50
J5
61301011821
STM PINS 61-70
J6
61301011821
STM PINS 81-90
J7
61301011821
STM PINS 11-20
J12
SSW-106-02-F-S
STM PINS 31-40
J13
61301011821
STM PINS 51-60
J8
SSW-106-02-F-S
STM PINS 71-80
J9
SSW-106-02-F-S
STM PINS 91-100
J10
SSW-106-02-F-S
SW3
SW4
SW5
KSR221GLFS
R52
R53
R54
3.3V
OSC_LSE_IN
OSC_LSE_OUT
X1
FC-135R32.768KF-AC3
32.768kHz
C1
C2
CAP 0603 8.2PF 50V 0.25PF C0G
LGND
TIM PWM Input
BOARD_TEMP
U2
TMP05ARTZ
C3
CAP 0603 0.1UF 25V 10% X7R
8MHz base clock
Y1
ASDMB-8.000MHZ-LC-T
C4
OSC_HSE
Optional battery removed
D1
NSR0340V2T1G
U1B
VREF+
VDDA
FB2
MMZ1608A252B
FB1
MMZ1608A252B
U3
LT6654AHS6-3
3V reference for ADC, input range 0-3V
SW1
R11
D2
D3
D4
R9
R10
R12
Place near MCU, ideally on 3 adjacent pins
Title: MCU.SchDoc
Desc:
Size: Tabloid
Auth: *
Proj: OmniTiles_MCU_BLE_DEV.PrjPcb
Date: 3/25/2026
8:49:42 PM
Sheet 3 of 6
File: MCU.SchDoc
PENN ELECTRIC RACING
www.pennelectricracing.com
Penn Engineering
www.seas.upenn.edu

THIS DOCUMENT AND THE DATA DISCLOSED HEREIN OR HEREWITH IS THE PROPERTY OF ALTIUM LIMITED AND MAY BE FREELY DISTRIBUTED IN WHOLE. NO RIGHTS ARE RESERVED OR EXPRESS OR IMPLIED WARANTEE GIVEN.

REVISION	DESCRIPTION	DATE	APPROVED

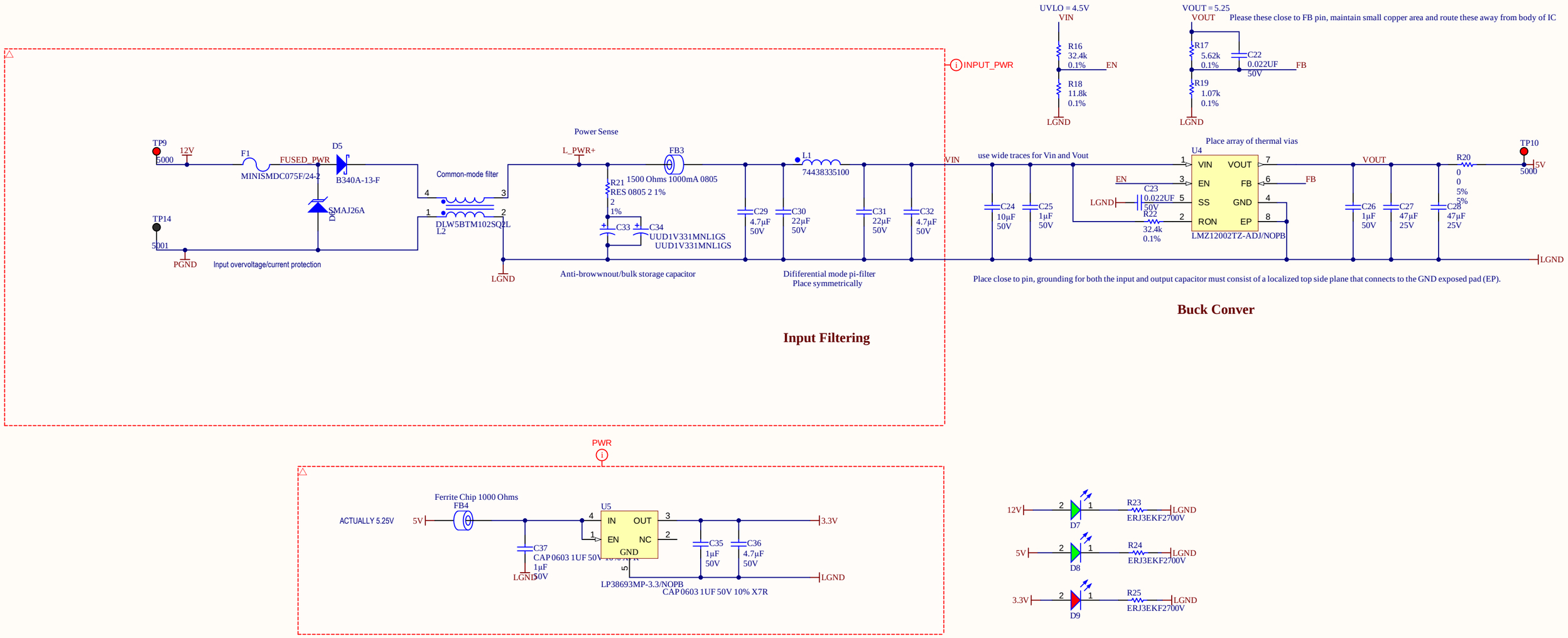

APPROVALS	DATE
ENG: *	
DSN: *	
CHK: *	
REFERENCE DOCUMENTS	
BOM:	
ASSY DWG:	
FAB DWG:	
PCB DWG:	

PROJECT: Altium *

PROJECT REVISION: Version control disabled | DOCUMENT REVISION: | DESIGN ITEM: Version control disabled

TITLE: *

SIZE	CAGE CODE	DWG NO.	REV
B			

SCALE: | FILE NAME: Power.SchDoc | SHEET 4 OF 6

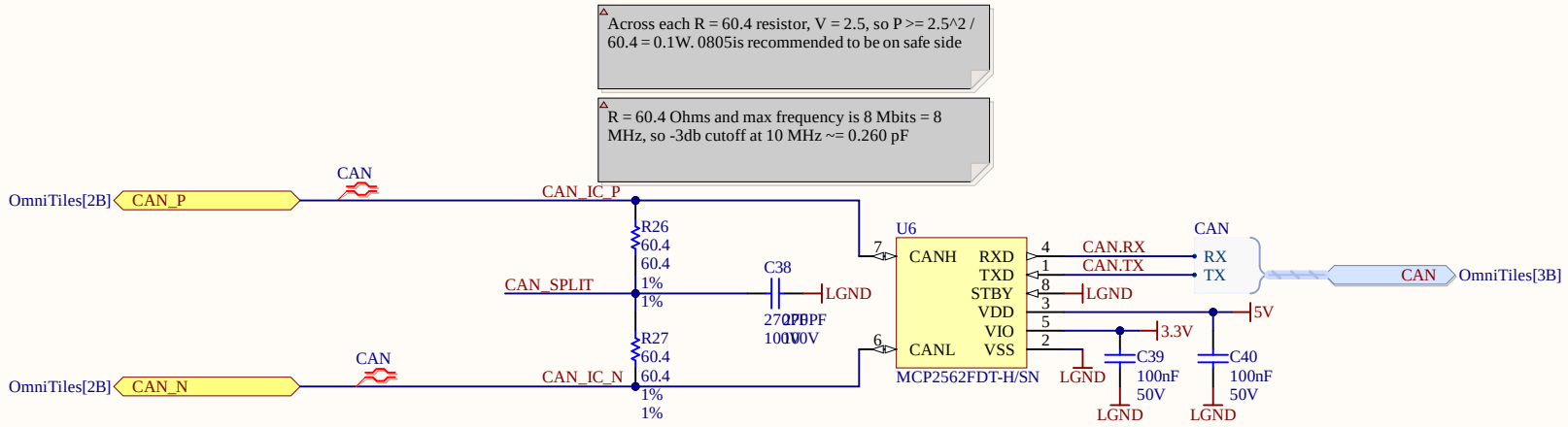

Title		
Size A	Number	Revision
Date: 3/25/2026		Sheet of
File: CAN.SchDoc		Drawn By:

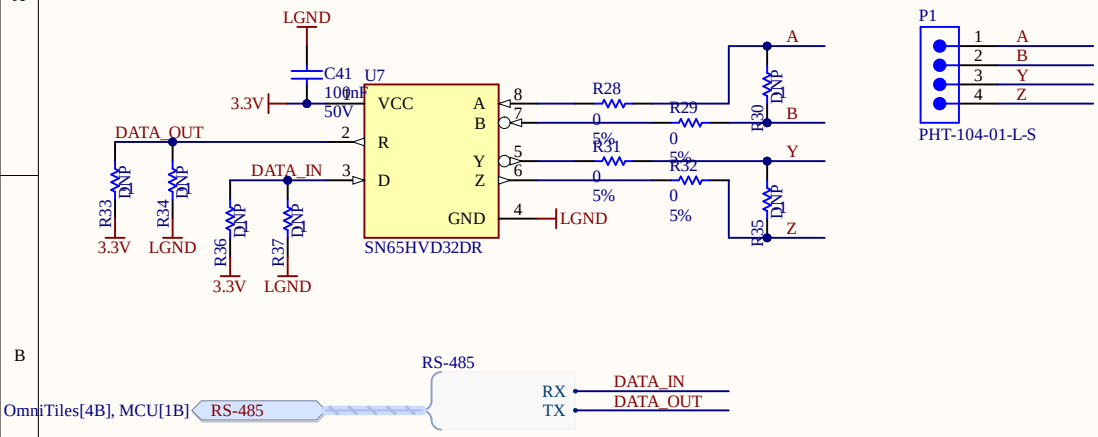

Title		
Size A	Number	Revision
Date: 3/25/2026		Sheet of
File: RS485.SchDoc		Drawn By: