THIS DOCUMENT AND THE DATA DISCLOSED HEREIN OR HEREWITH IS THE PROPERTY OF ALTIUM LIMITED AND MAY BE FREELY DISTRIBUTED IN WHOLE. NO RIGHTS ARE RESERVED OR EXPRESS OR IMPLIED WARANTEE GIVEN.

REVISION	DESCRIPTION	DATE	APPROVED

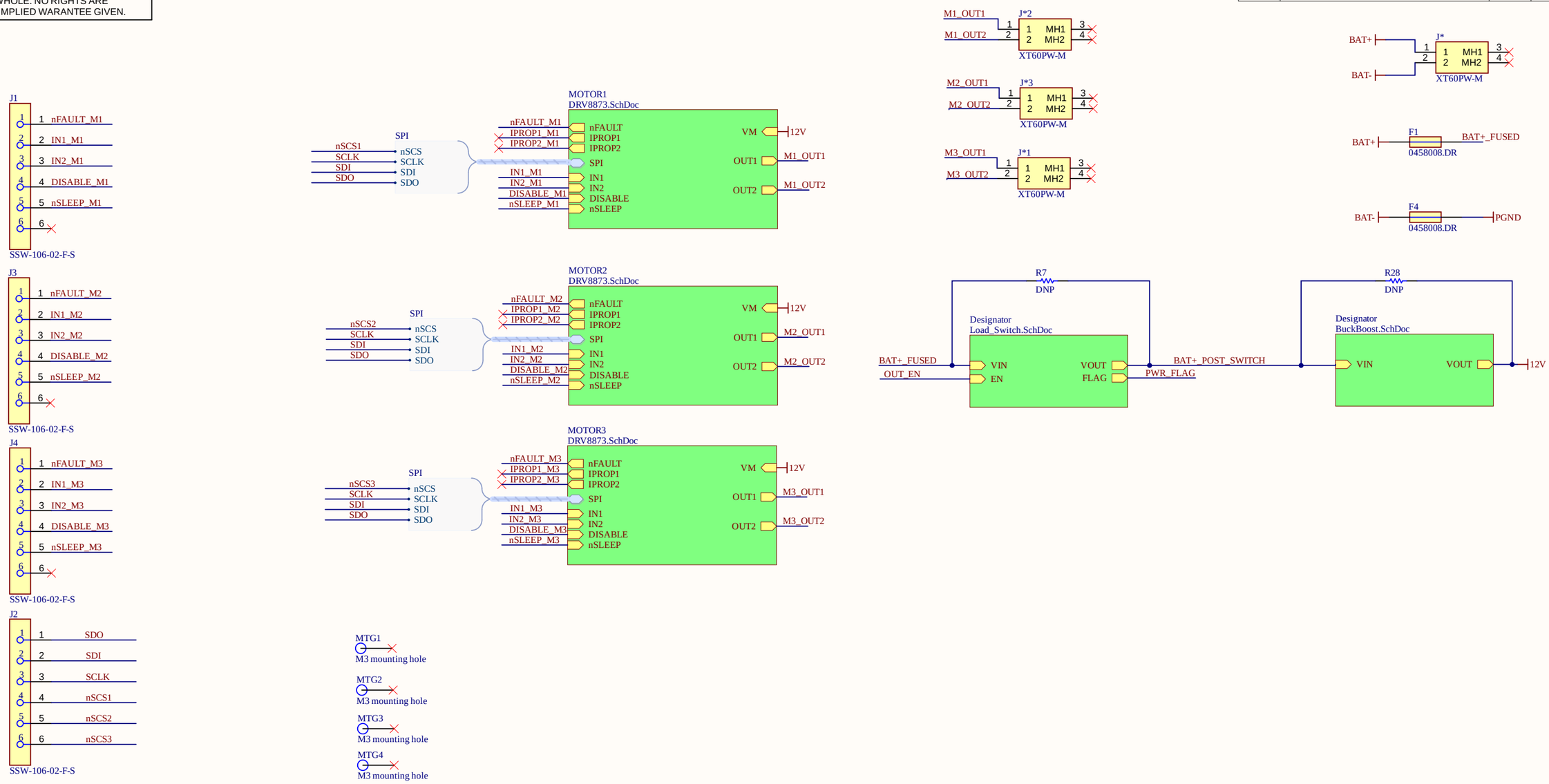

APPROVALS	DATE
ENG: *	
DSN: *	
CHK: *	
REFERENCE DOCUMENTS	
BOM:	
ASSY DWG:	
FAB DWG:	
PCB DWG:	

PROJECT: Altium *

PROJECT REVISION: Version control disabled | DOCUMENT REVISION: Version control disabled | DESIGN ITEM:

TITLE: *

SIZE	CAGE CODE	DWG NO.	REV
B			

SCALE: | FILE NAME: OmniTiles_Power_Board.SchDoc | SHEET 1 OF 4

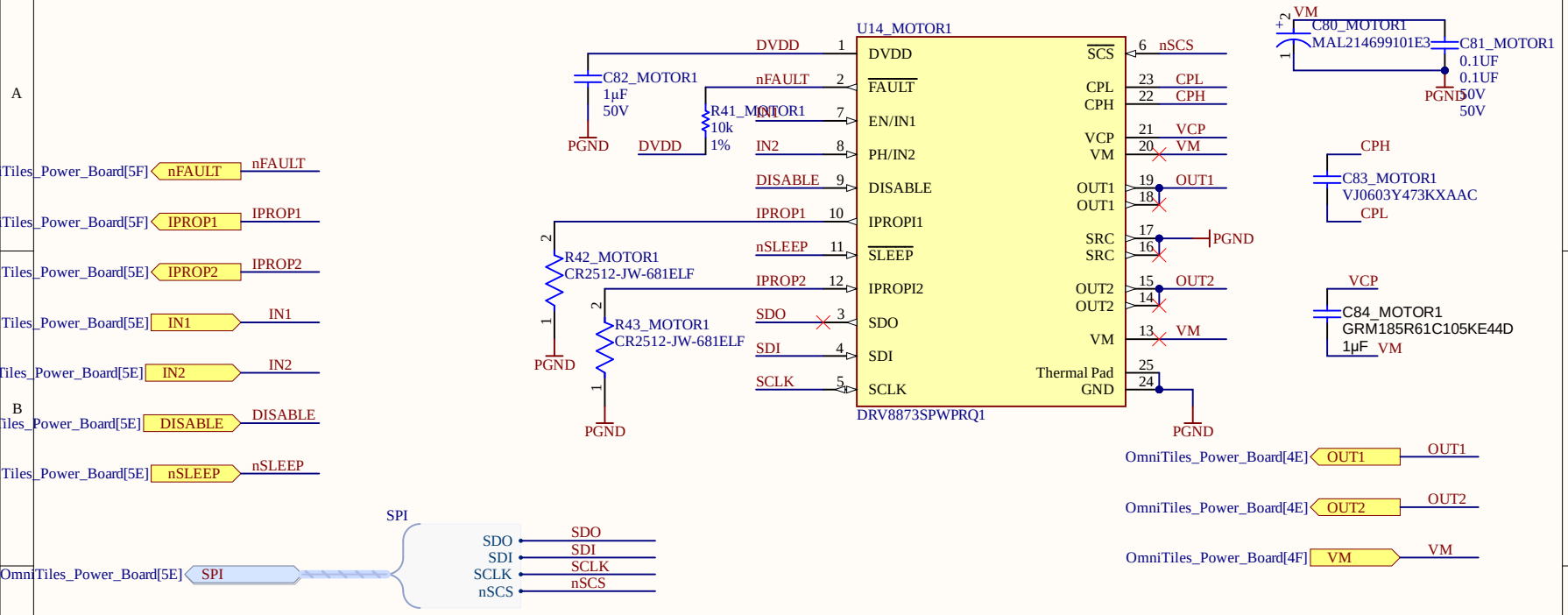

Title		
Size A	Number	Revision
Date: 3/22/2026		Sheet of
File: DRV8873.SchDoc		Drawn By:

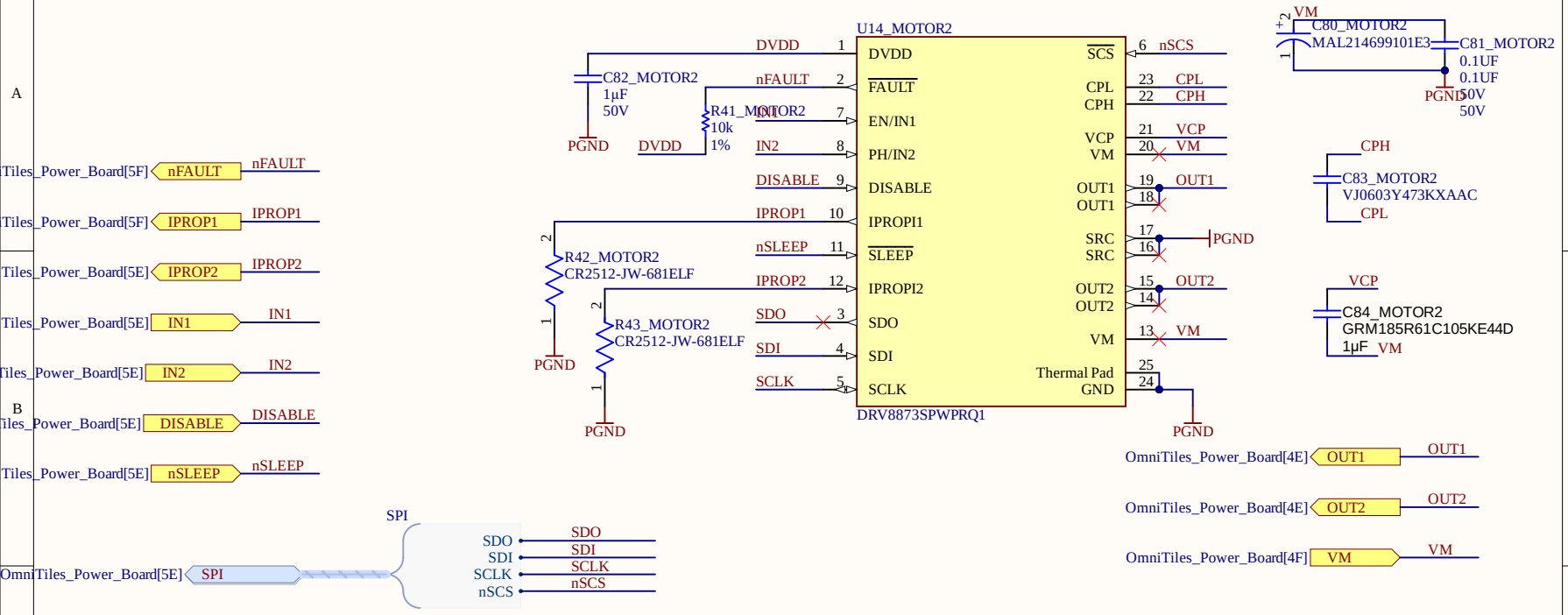

Title		
Size A	Number	Revision
Date: 3/22/2026		Sheet of
File: DRV8873.SchDoc		Drawn By:

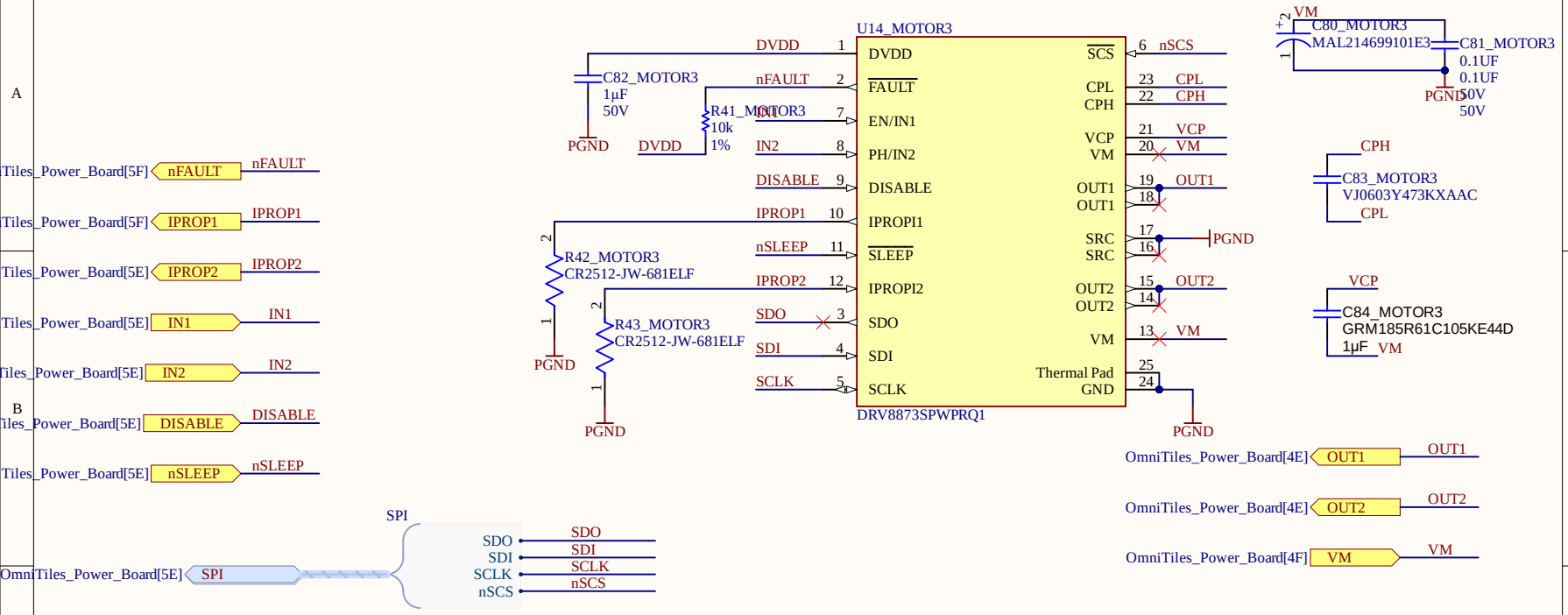

Title		
Size A	Number	Revision
Date: 3/22/2026		Sheet of
File: DRV8873.SchDoc		Drawn By:

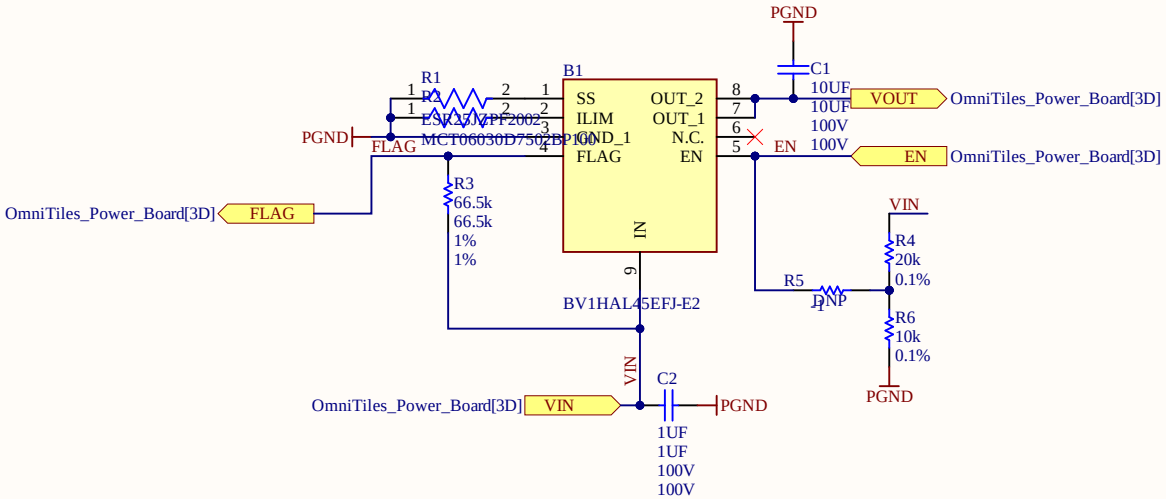

Title		
Size A	Number	Revision
Date: 3/22/2026		Sheet of
File: Load_Switch.SchDoc		Drawn By:

Revision History				
Rev	ECN #	Approved Date	Approved by	Notes
N/A	N/A	N/A	N/A	N/A

Desmos Calcs:
https://www.desmos.com/calculator/gkoe8gw5vd

Components should be rated for 1.2*16.8V = 20V

Peak I_RMS at 10A load is 4.518 A, 3x 220uF bulks can handle 2.4A * 3 = 7.2A at 100kHz

Peak power loss at boost: 2.63W
Top Buck FET: 1.3W
Top Boost FET: 0.25W
Bottom Boost FET: 1.08W

General DC power loss (10A): 1.43W
Shunts: 0.4W
Inductor: 1.03W

Voltage ripple due to bulk cap: 7mV boost, 4mV buck

Voltage ripple due to ESR (15mOhm): 180mV boost, 109mV buck

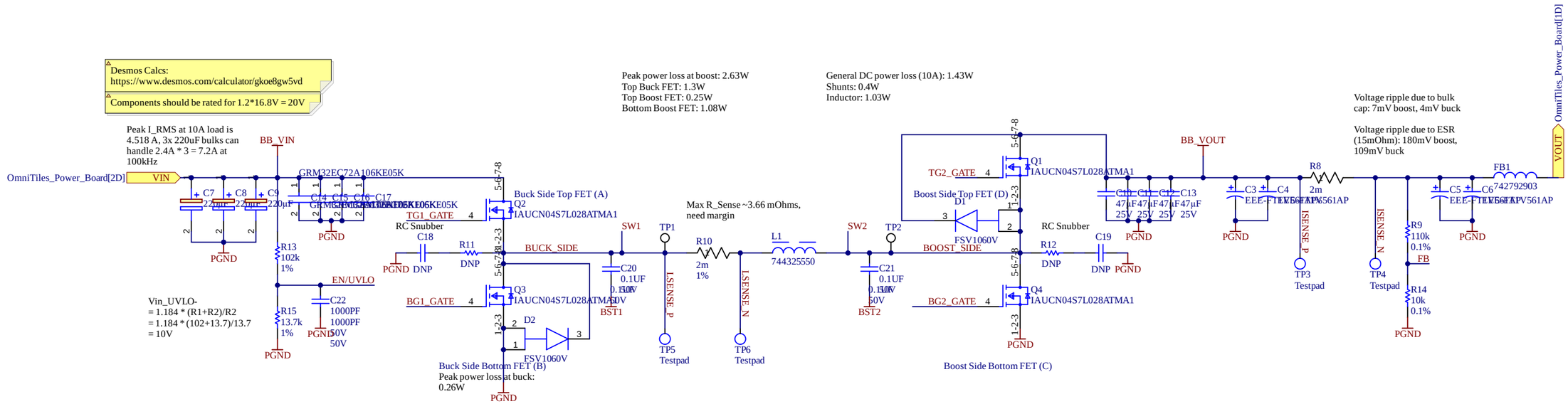

Grounds tied close to the sources of switch B and switch C

PGND — TP7

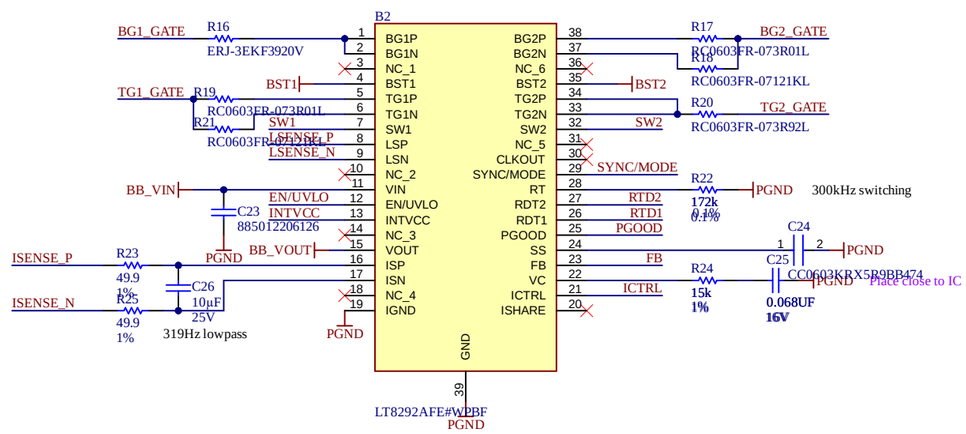

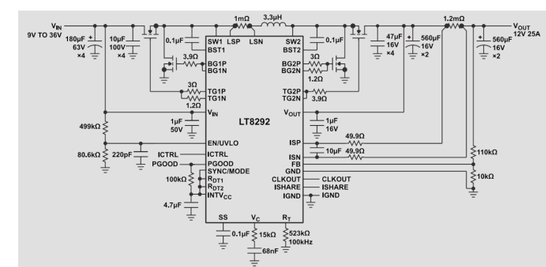

Operation mode: pulse skip 100k to GND, FCM float

SYNC/MODE — R27 100k 1% — PGND

PGOOD — Pullup to INTVcc

R26 100k 1%

INTVCC
RTD2
RTD1

C27 4.7µF 10V

PGND

40ns Buck/Boost side switching dead time

ICTRL — INTVCC

50mV full-scale threshold
25A current limit

1. Keep gate traces short
2. Minimum spacing between sense traces
3. Connect BST cap close to IC
4. Place sense filtering close to IC
5. Place INTVCC cap close to IC

Texas Instruments and/or its licensors do not warrant the accuracy or completeness of this specification or any information contained therein. Texas Instruments and/or its licensors do not warrant that this design will meet the specifications, will be suitable for your application or fit for any particular purpose, or will operate in an implementation. Texas Instruments and/or its licensors do not warrant that the design is production worthy. You should completely validate and test your design implementation to confirm the system functionality for your application.

Orderable:	Designed for:	Mod. Date: 1/30/2026	Texas Instruments
TID #:	Project Title:		
Number: Rev:	Sheet Title: *		
SVN Rev: Version control disabled	Assembly Variant: [No Variations]	Sheet: 4 of 4	
Drawn By: *	File: BuckBoost.SchDoc	Size: B	http://www.ti.com
Engineer:	Contact:		© Texas Instruments