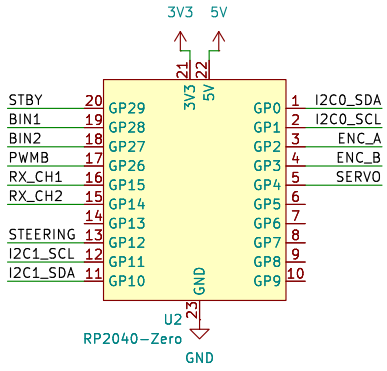

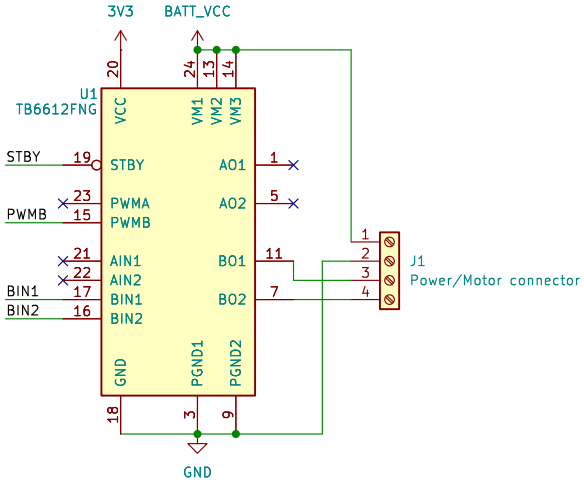

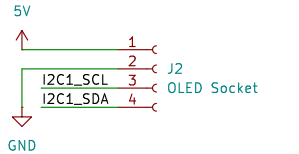

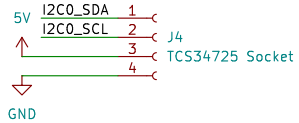

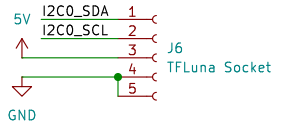

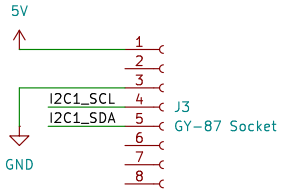

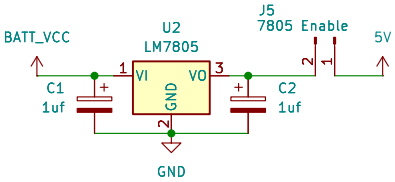

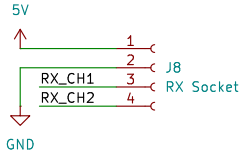

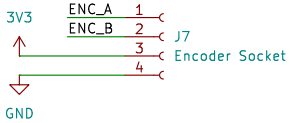

DIY Laboratories

Sheet: /

File: peripherals-board.kicad_sch

Title: Peripherals Board Revision 2

Size: A4	Date: 2025-07-02	**Rev: 2**
KiCad E.D.A. 9.0.2		Id: 1/1