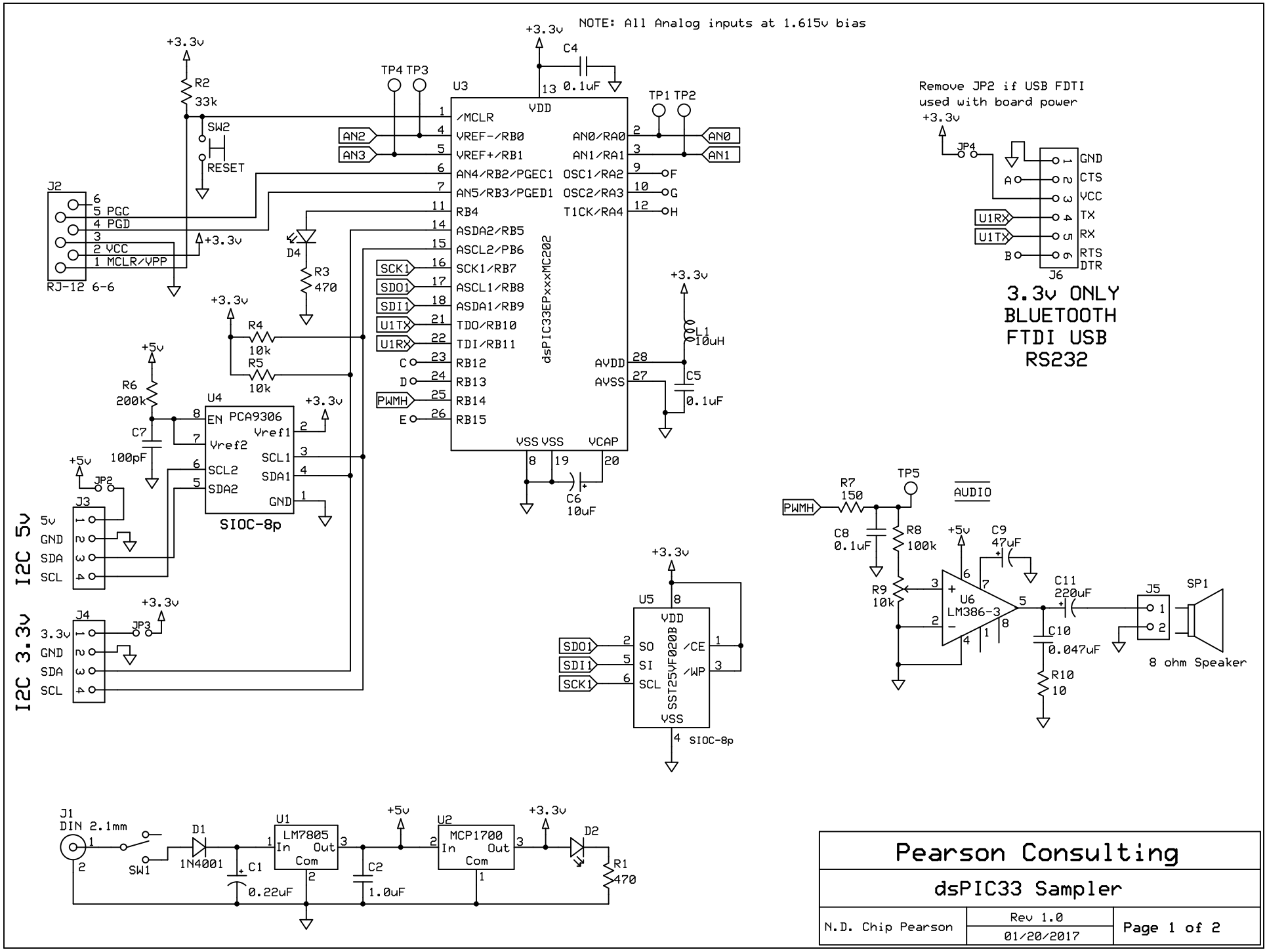
NOTE: All Analog inputs at 1.615v bias
U3
dsPIC33EPxxxMC202
/MCLR
VREF-/RB0
VREF+/RB1
AN4/RB2/PGEC1
AN5/RB3/PGED1
RB4
ASDA2/RB5
ASCL2/PB6
SCK1/RB7
ASCL1/RB8
ASDA1/RB9
TDO/RB10
TDI/RB11
RB12
RB13
RB14
RB15
AN0/RA0
AN1/RA1
OSC1/RA2
OSC2/RA3
T1CK/RA4
VDD
AVDD
AVSS
VSS VSS
VCAP
J2
RJ-12 6-6
PGC
PGD
VCC
MCLR/VPP
SW2
RESET
R2
33k
R3
470
D4
R4
10k
R5
10k
R6
200k
C7
100pF
U4
PCA9306
SIOC-8p
Vref1
Vref2
SCL1
SDA1
SCL2
SDA2
EN
GND
J3
J4
I2C 5v
I2C 3.3v
5v
GND
SDA
SCL
3.3v
JP2
JP3
C4
0.1uF
C5
0.1uF
C6
10uF
L1
10uH
TP1 TP2
TP3 TP4
AN0
AN1
AN2
AN3
SCK1
SDO1
SDI1
U1TX
U1RX
PWMH
U5
SST25VF020B
SO
SI
/CE
/WP
SIOC-8p
Remove JP2 if USB FDTI
used with board power
JP4
J6
GND
CTS
VCC
TX
RX
RTS
DTR
3.3v ONLY
BLUETOOTH
FTDI USB
RS232
AUDIO
TP5
R7
150
C8
0.1uF
R8
100k
R9
10k
C9
47uF
U6
LM386-3
C11
220uF
C10
0.047uF
R10
10
J5
SP1
8 ohm Speaker
J1
DIN 2.1mm
SW1
D1
1N4001
C1
0.22uF
U1
LM7805
In
Out
Com
C2
1.0uF
U2
MCP1700
D2
R1
470
Pearson Consulting
dsPIC33 Sampler
N.D. Chip Pearson
Rev 1.0
01/20/2017
Page 1 of 2