DMX

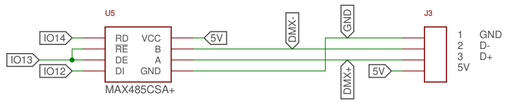

POWER

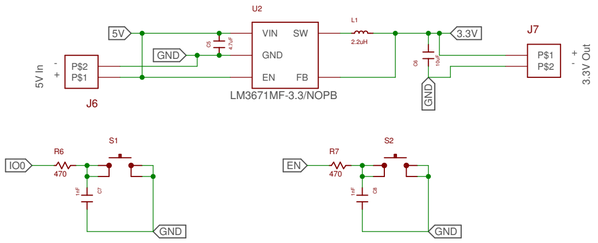

USB

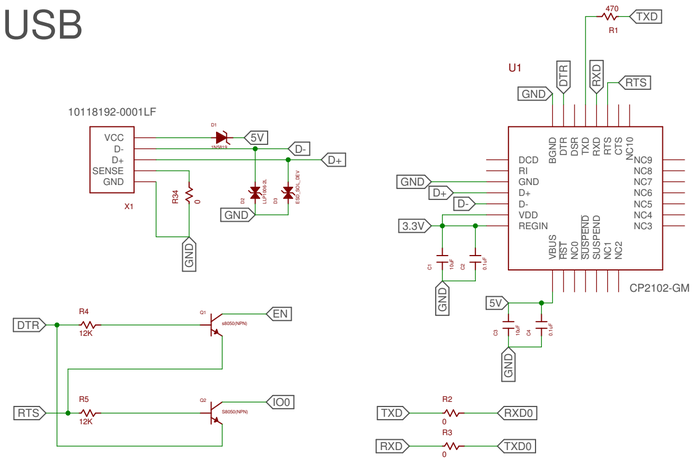

ESP 32

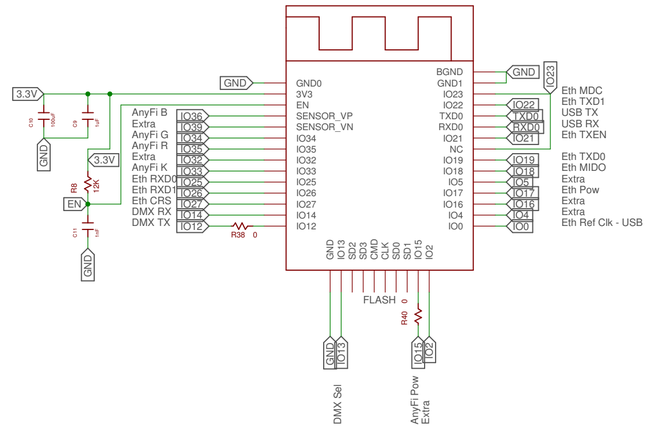

EXTRA

ANYFI

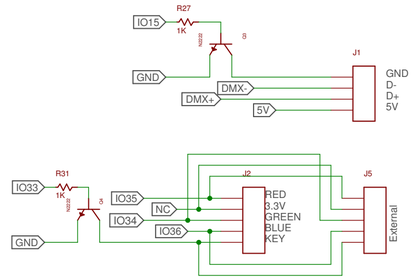

ETHERNET

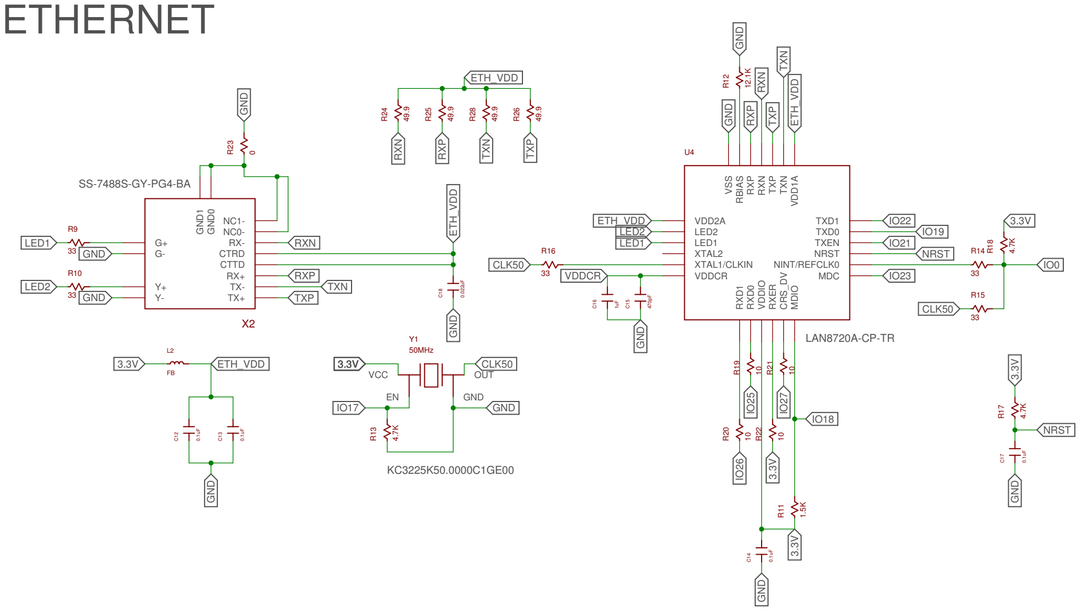

Blizzard Lighting LLC	
Title: Blizzard Board	
Designed By: Christian Krueger	REV: 1.2
Date: 8.2.17	Sheet: 1/1