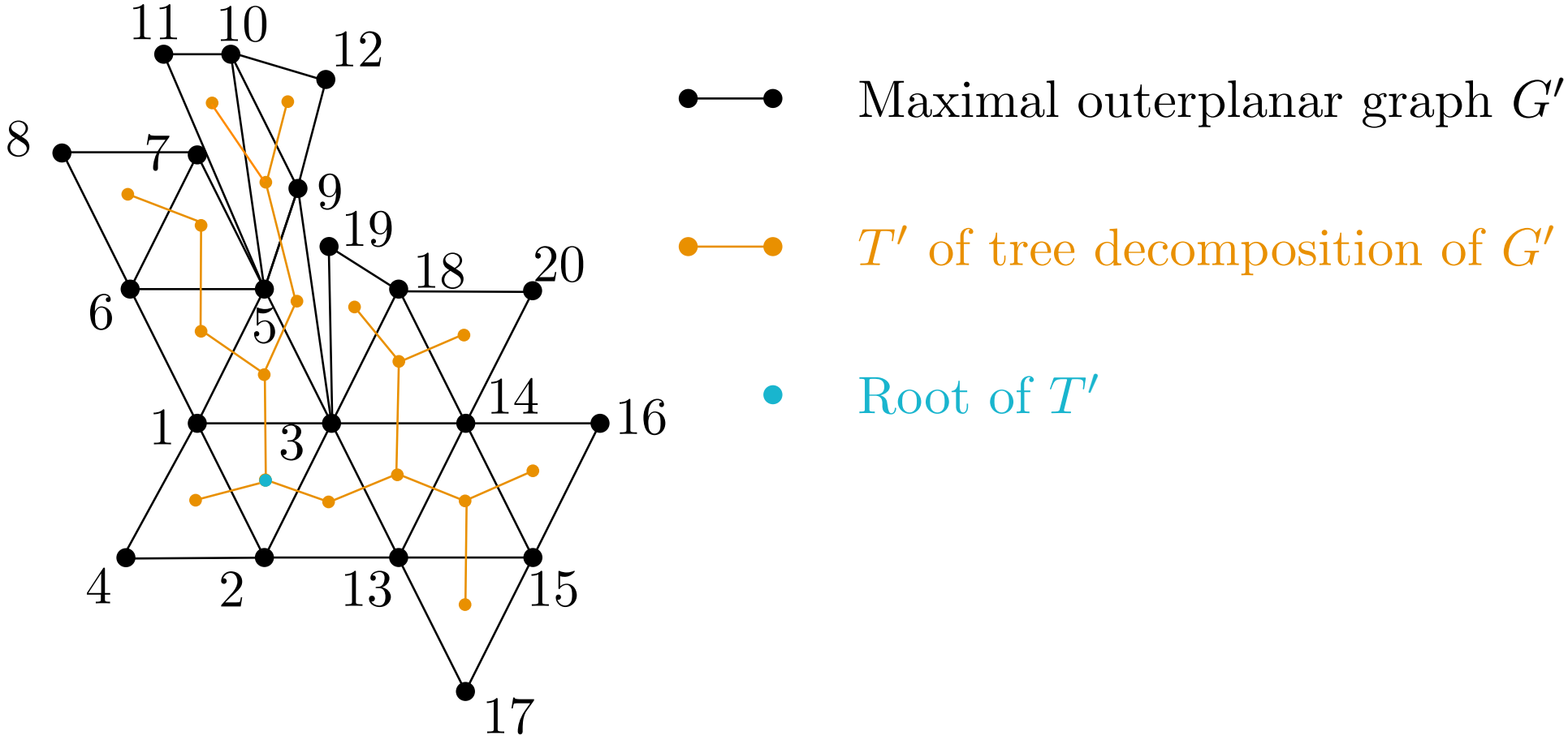
11
10
12
8
7
9
19
18
20
6
5
14
16
1
3
4
2
13
15
17
Maximal outerplanar graph G'
T' of tree decomposition of G'
Root of T'

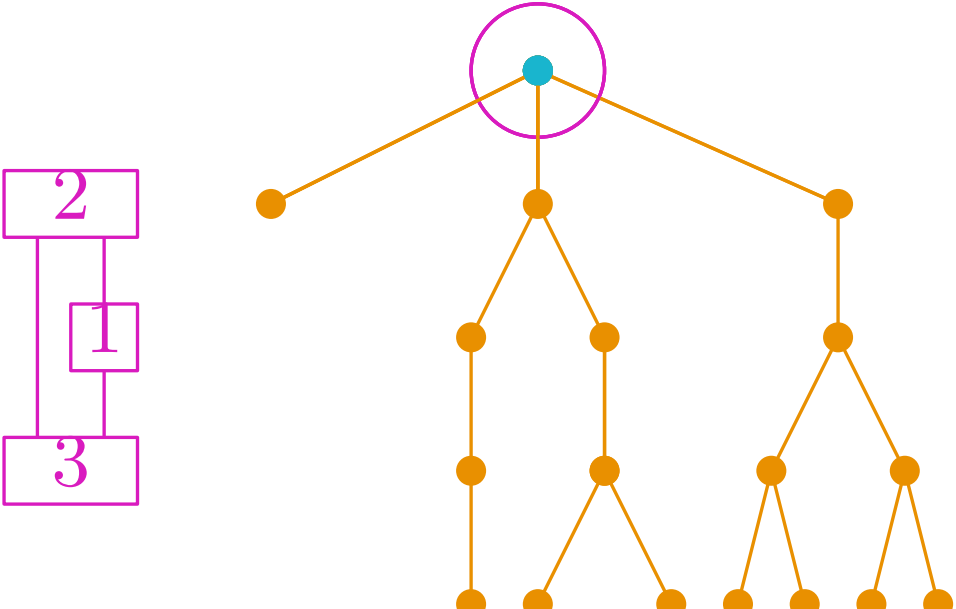
2
1
3

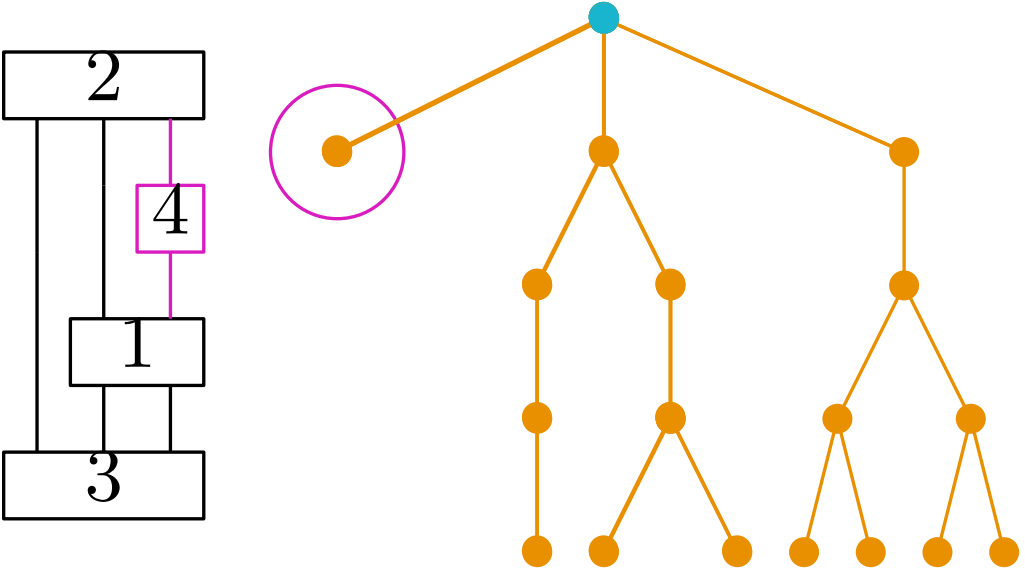
2
4
1
3

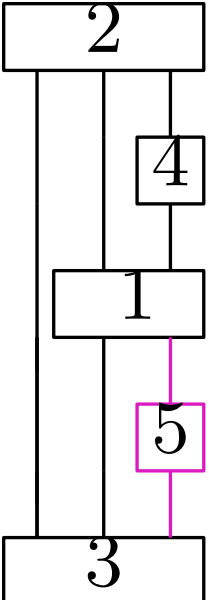
2
4
1
5
3

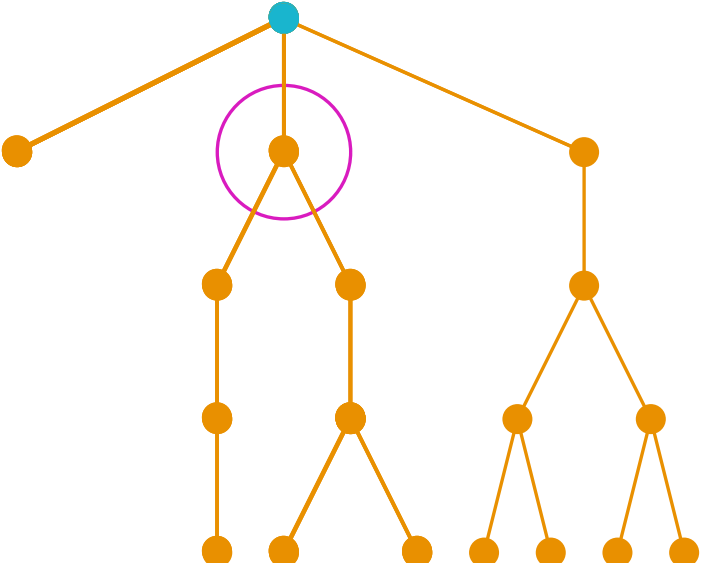

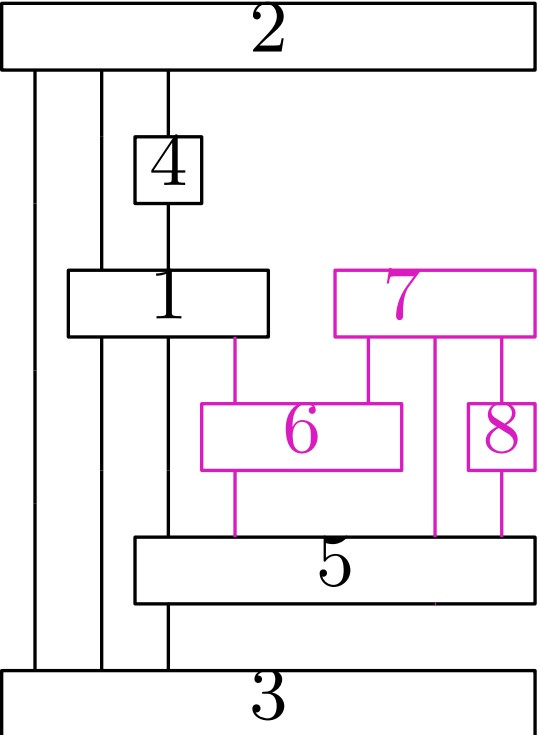
2
4
1
7
6
8
5
3

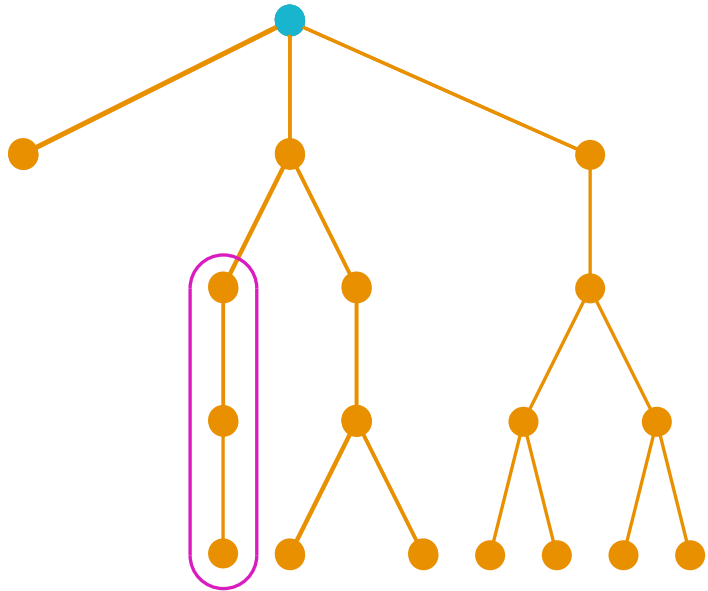

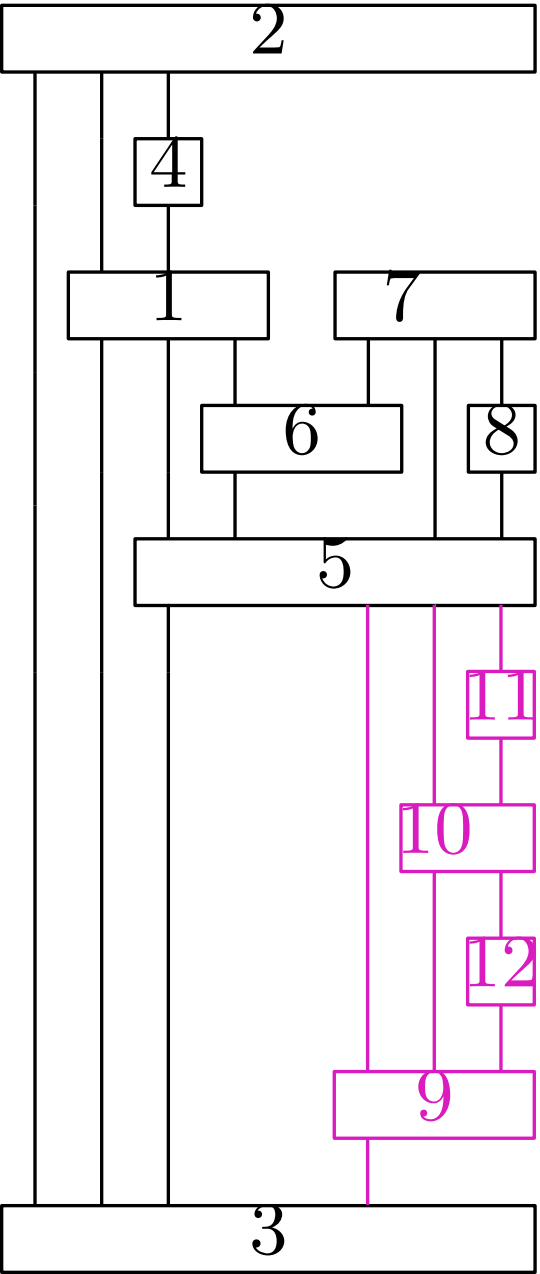
2
4
1
7
6
8
5
11
10
12
9
3

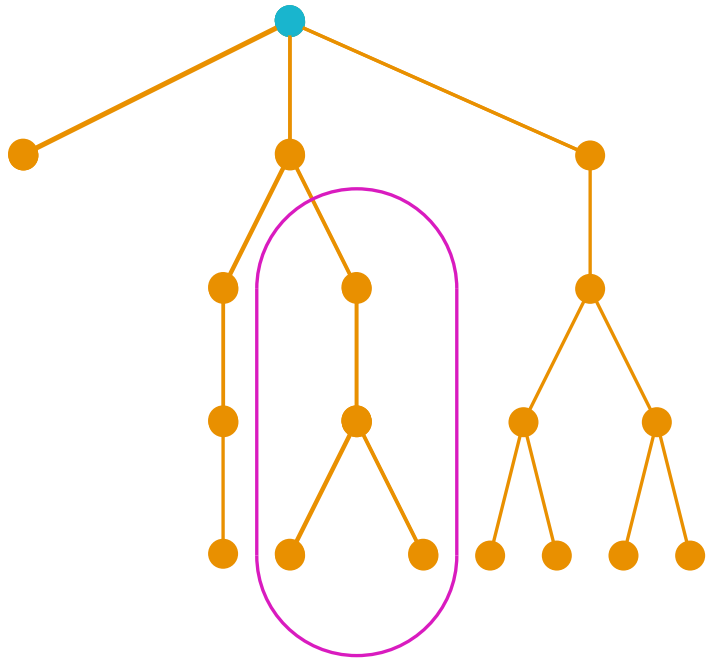

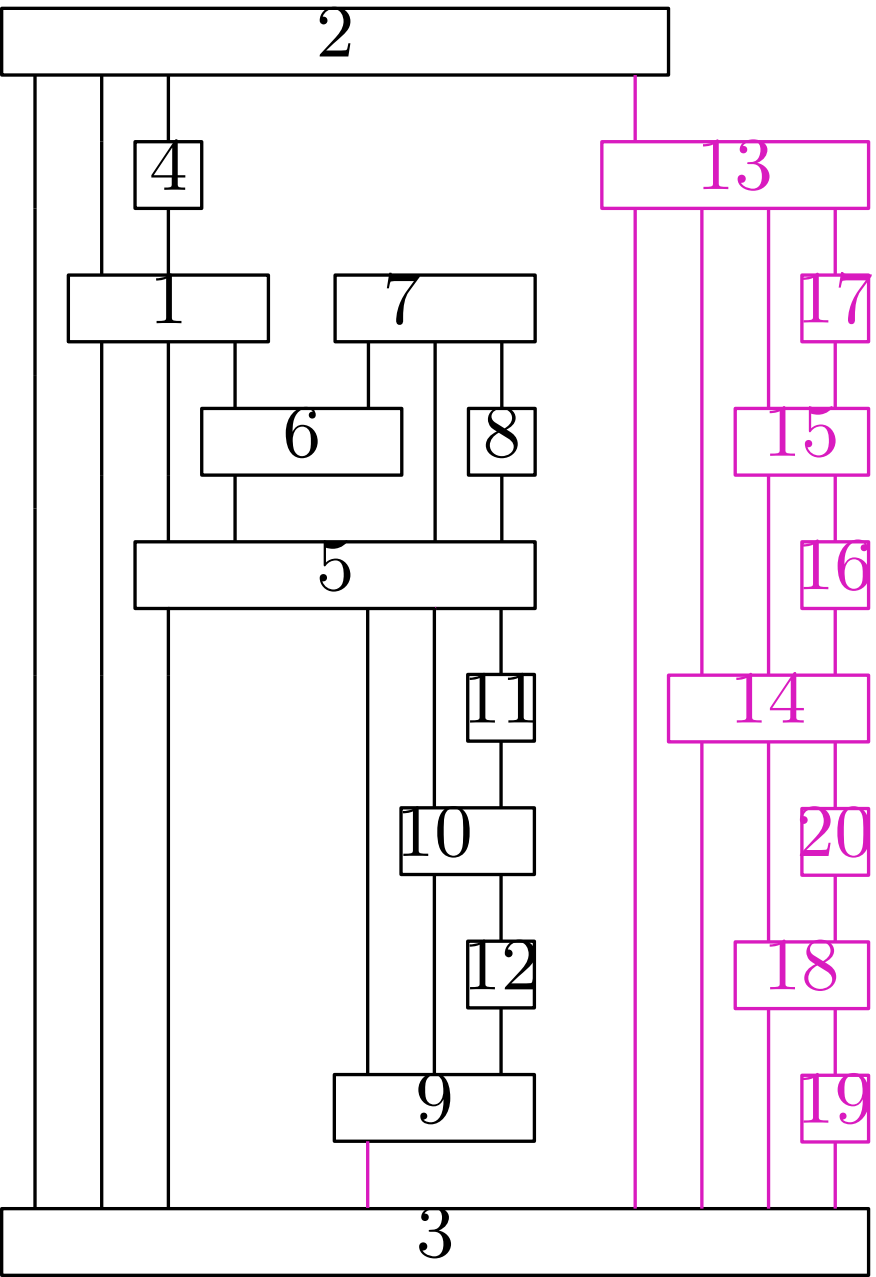
2
4
13
1
7
17
6
8
15
5
16
11
14
10
20
12
18
9
19
3

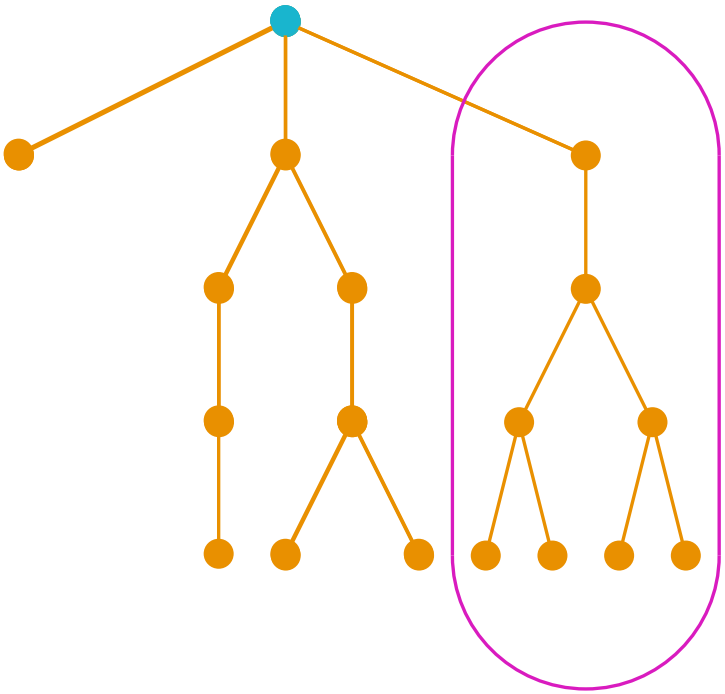

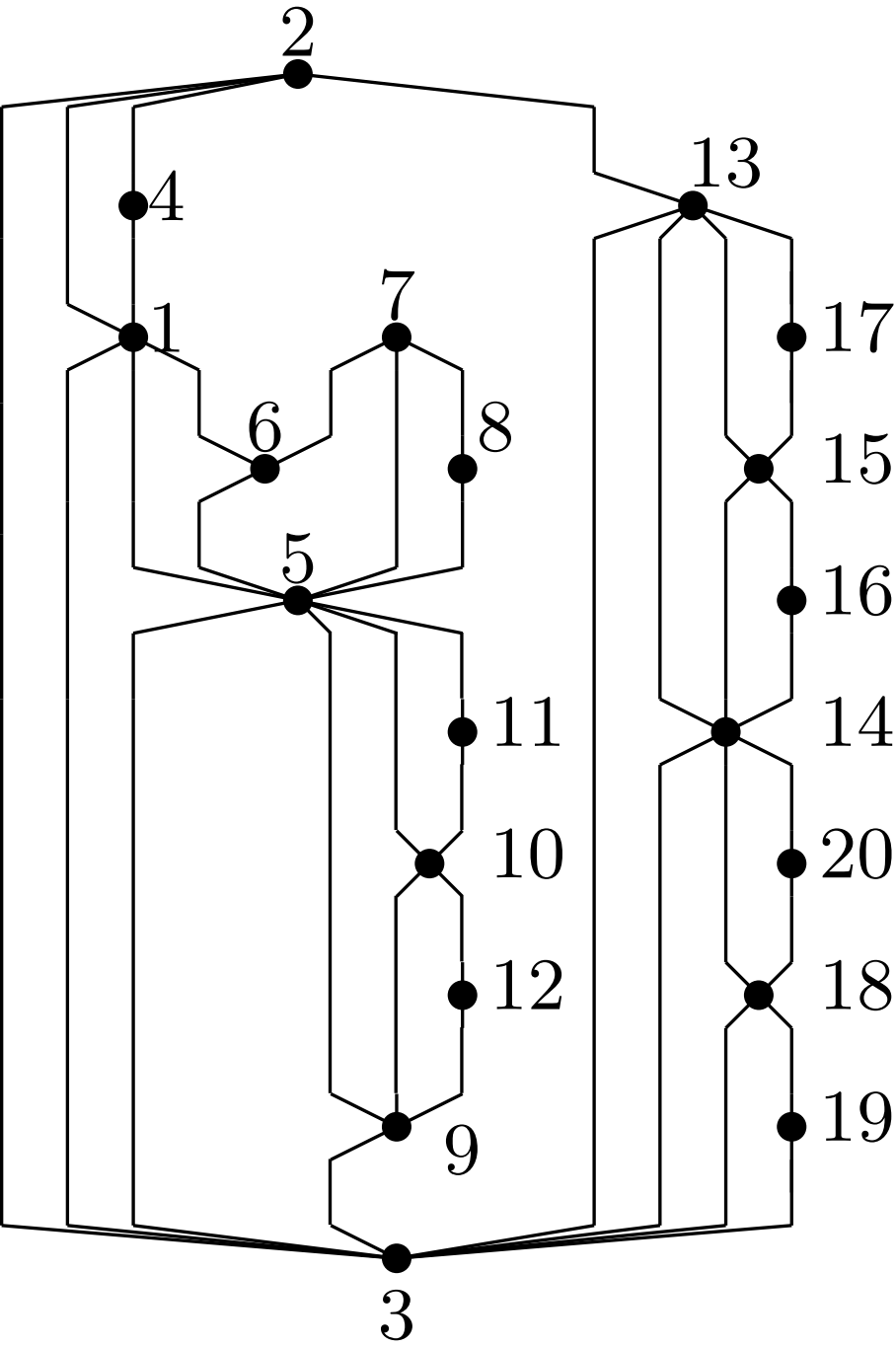
2
4
13
1
7
17
6
8
15
5
16
11
14
10
20
12
18
9
19
3

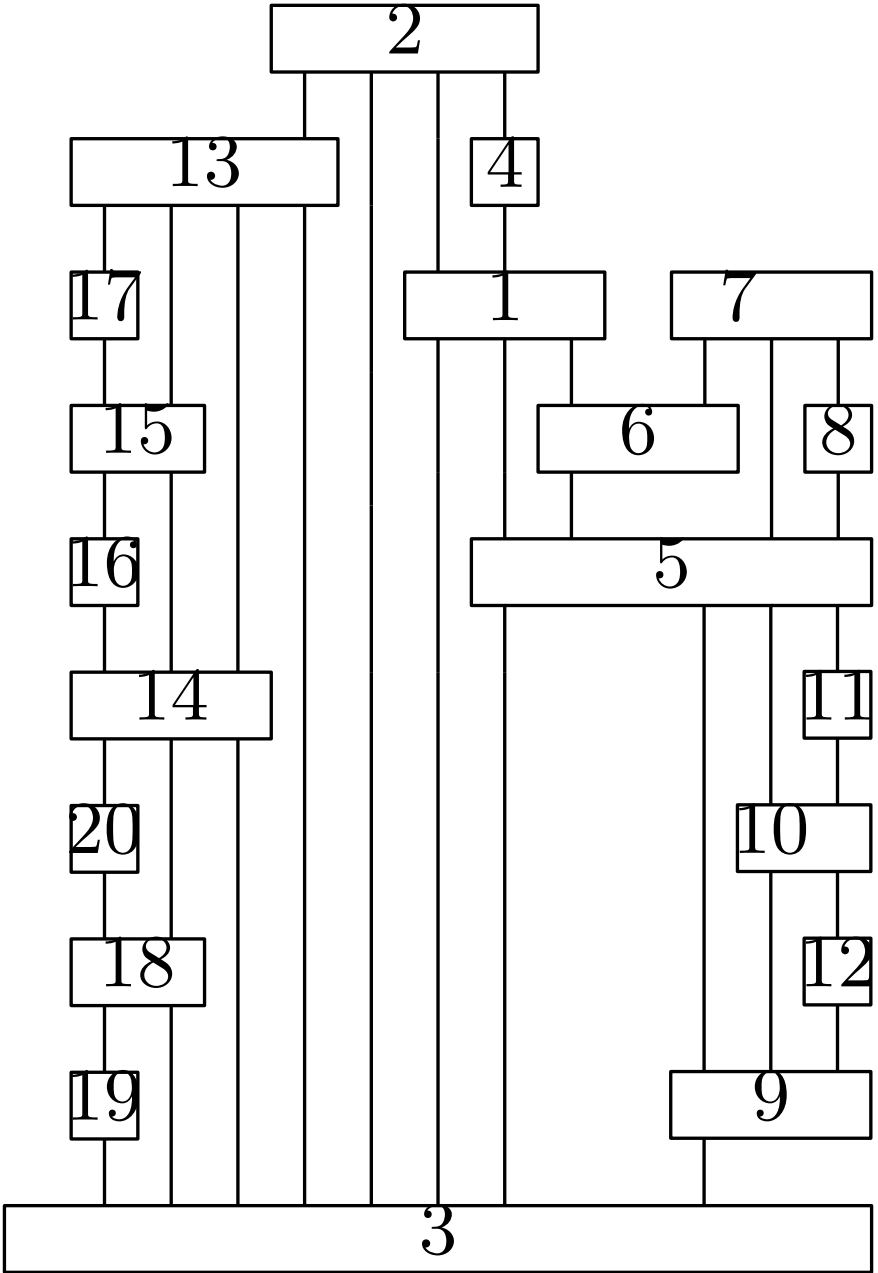
2
13
4
17
1
7
15
6
8
16
5
14
11
20
10
18
12
19
9
3

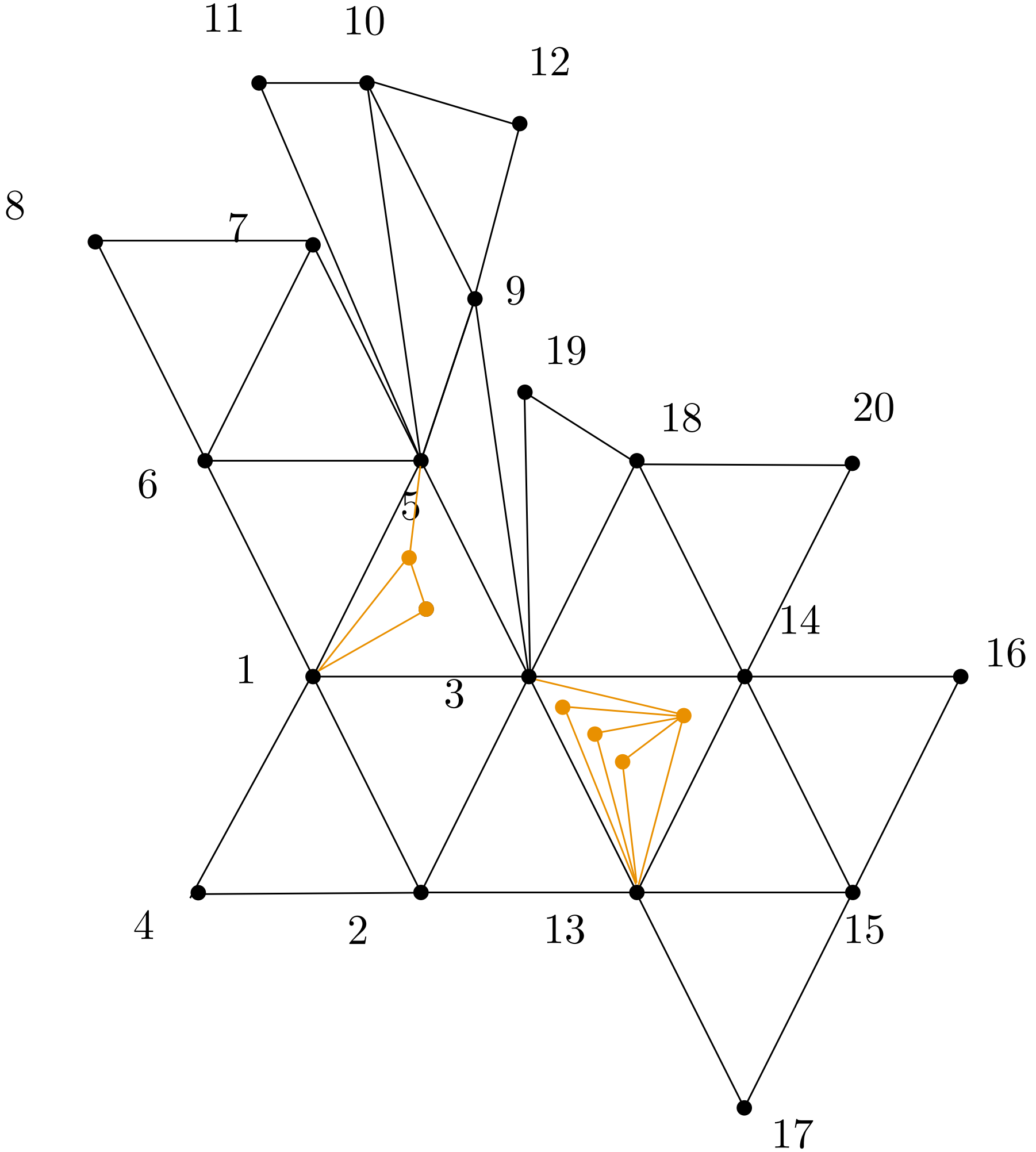
11
10
12
8
7
9
19
18
20
6
5
14
16
1
3
4
2
13
15
17

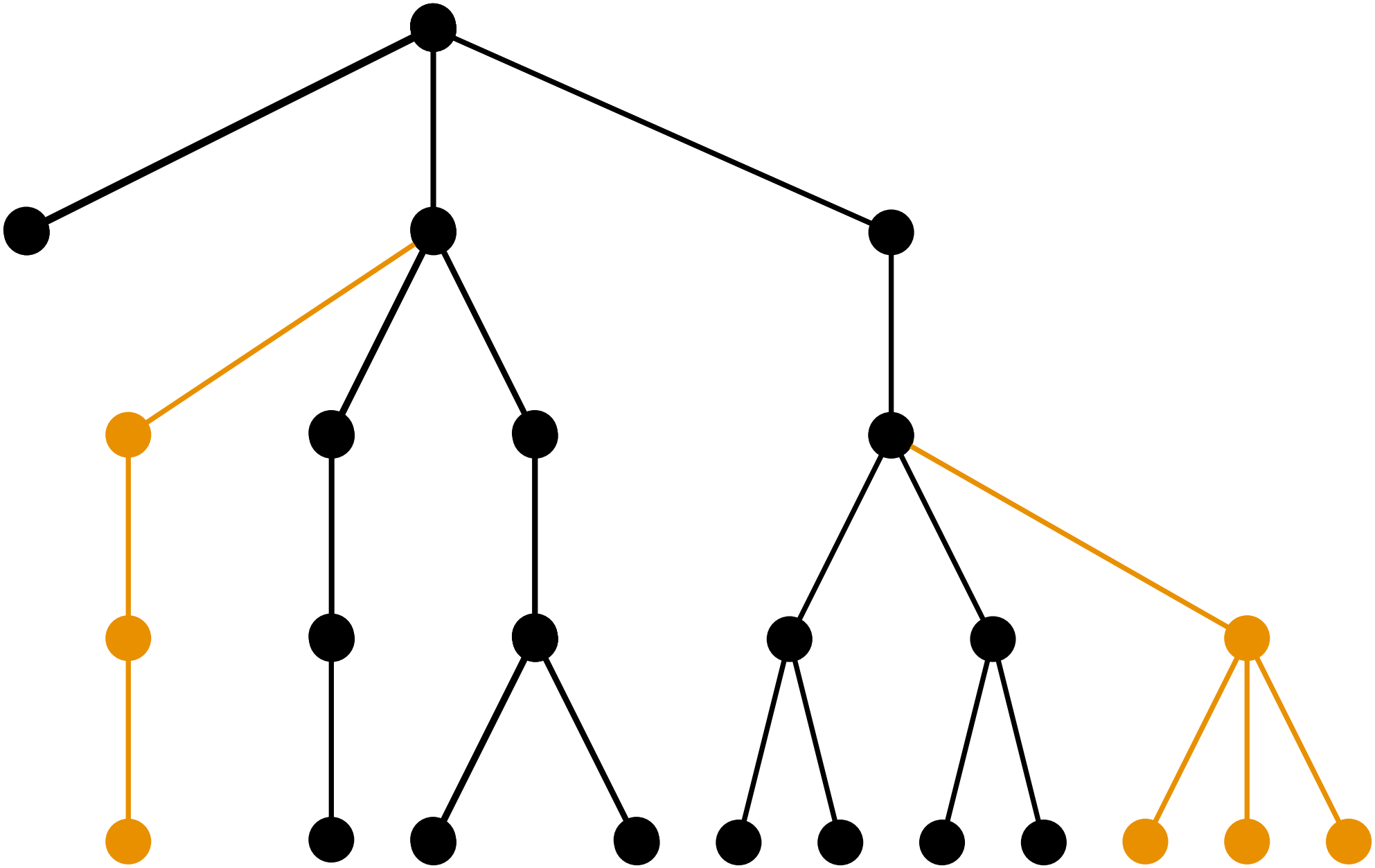

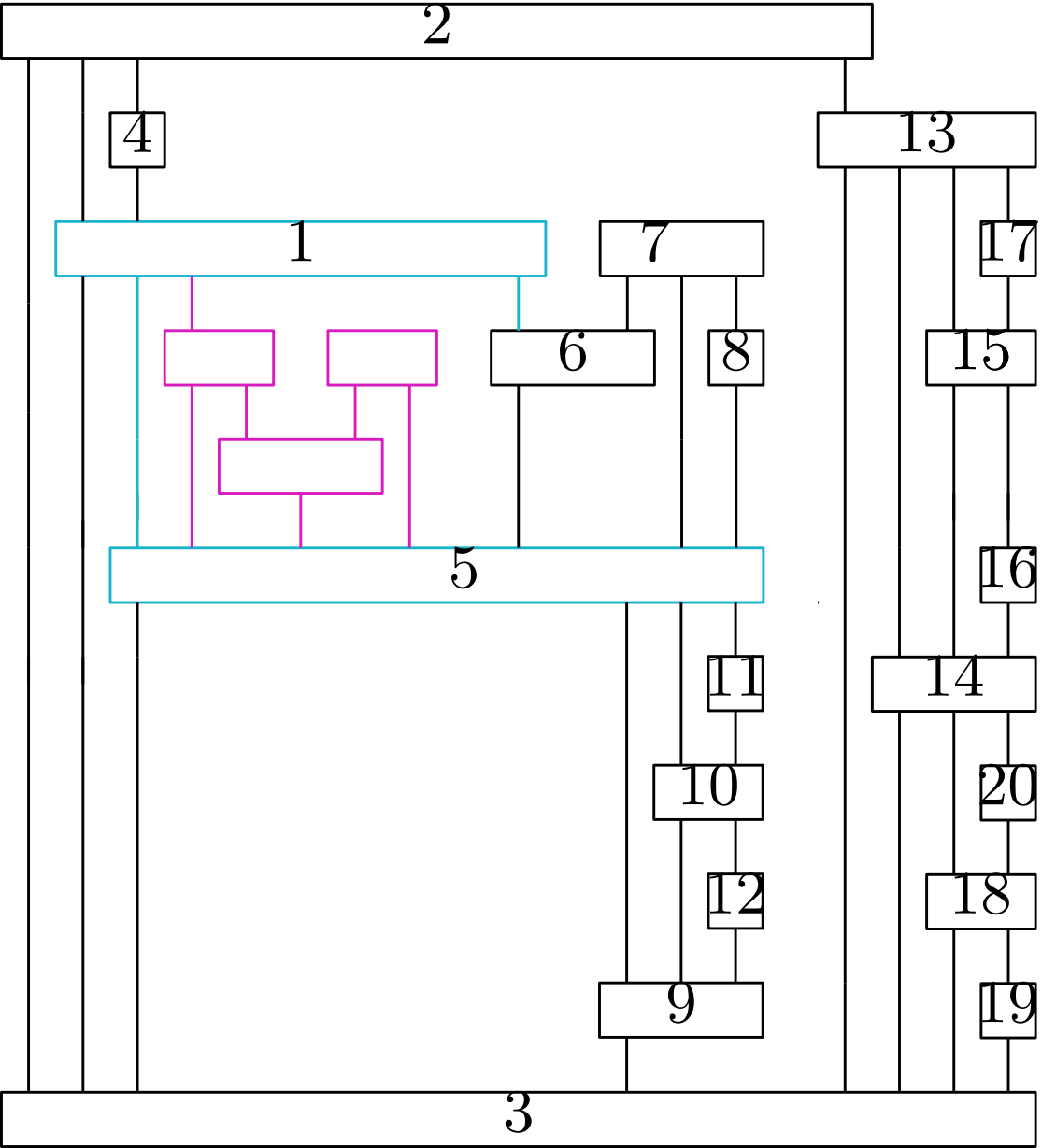
2
4
13
1
7
17
6
8
15
5
16
11
14
10
20
12
18
9
19
3

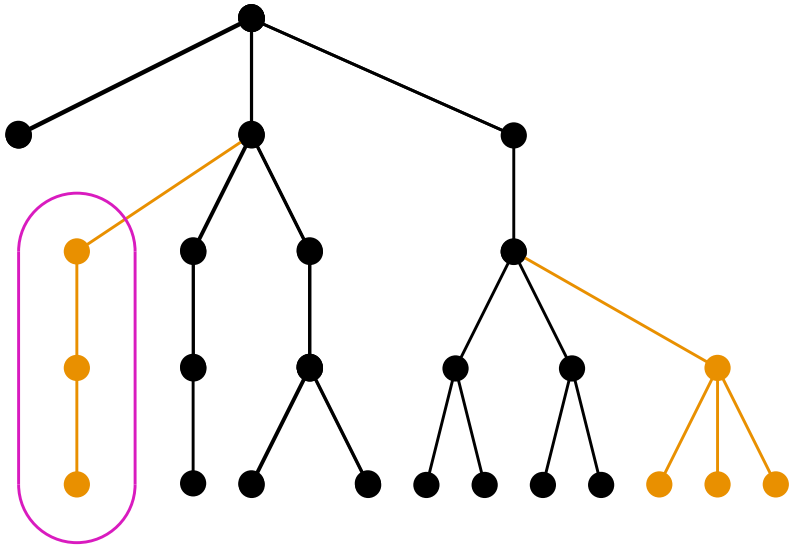

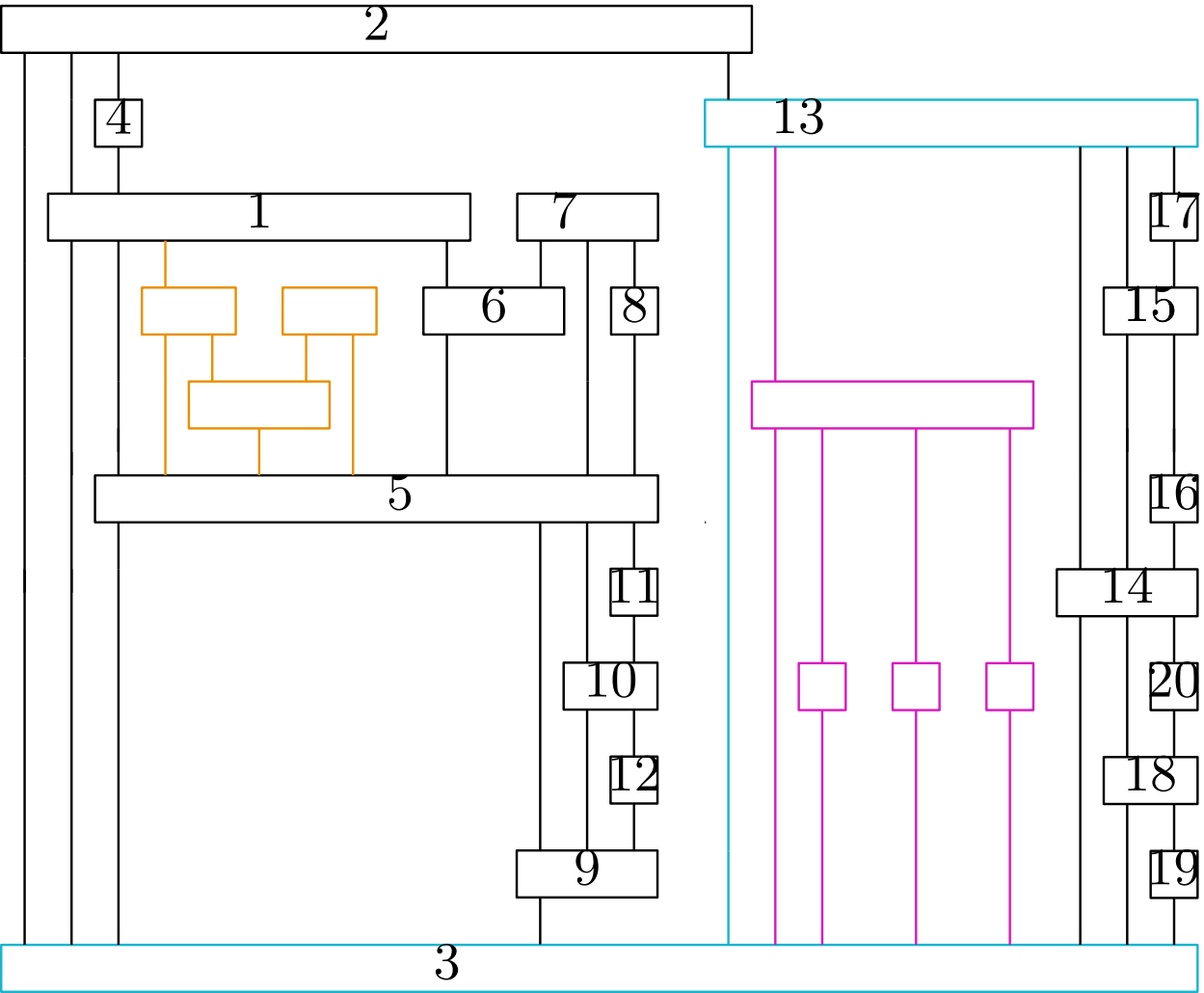
2
4
13
1
7
17
6
8
15
5
16
11
14
10
20
12
18
9
19
3

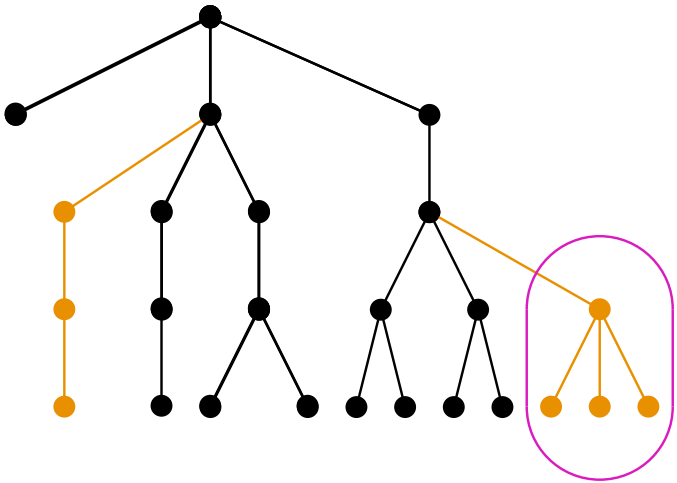

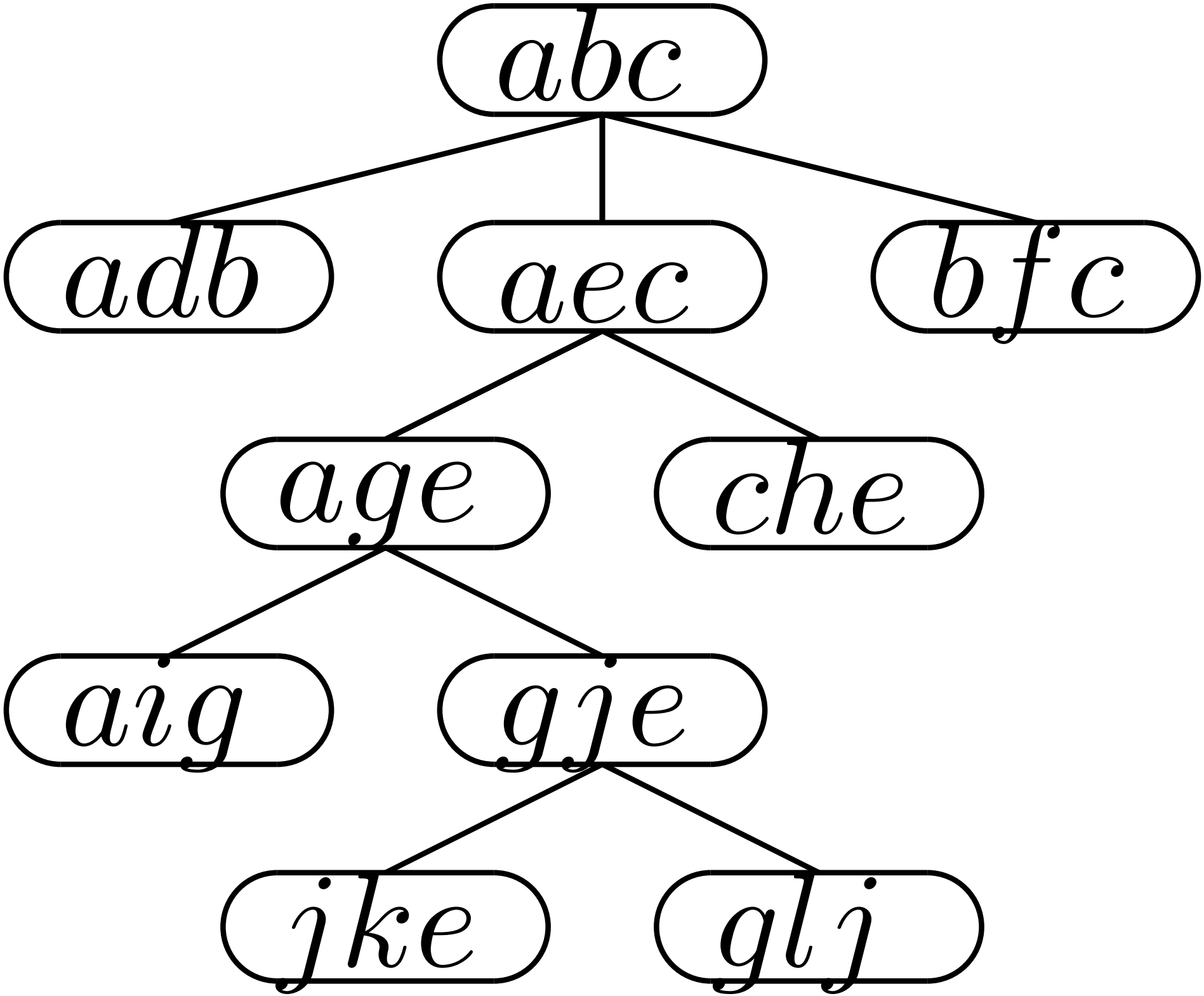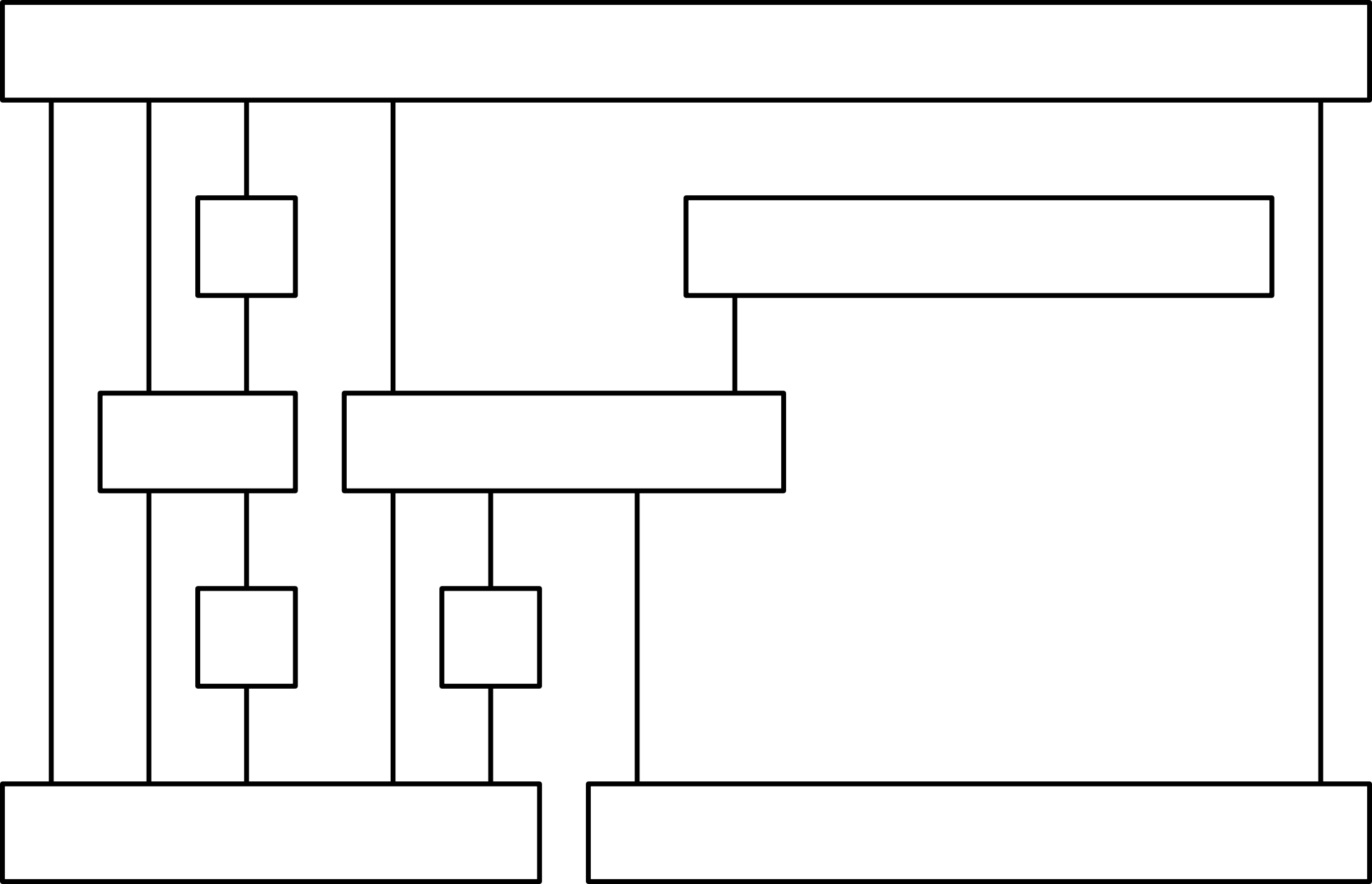
abc
adb
aec
bfc
age
che
aig
gje
jke
glj