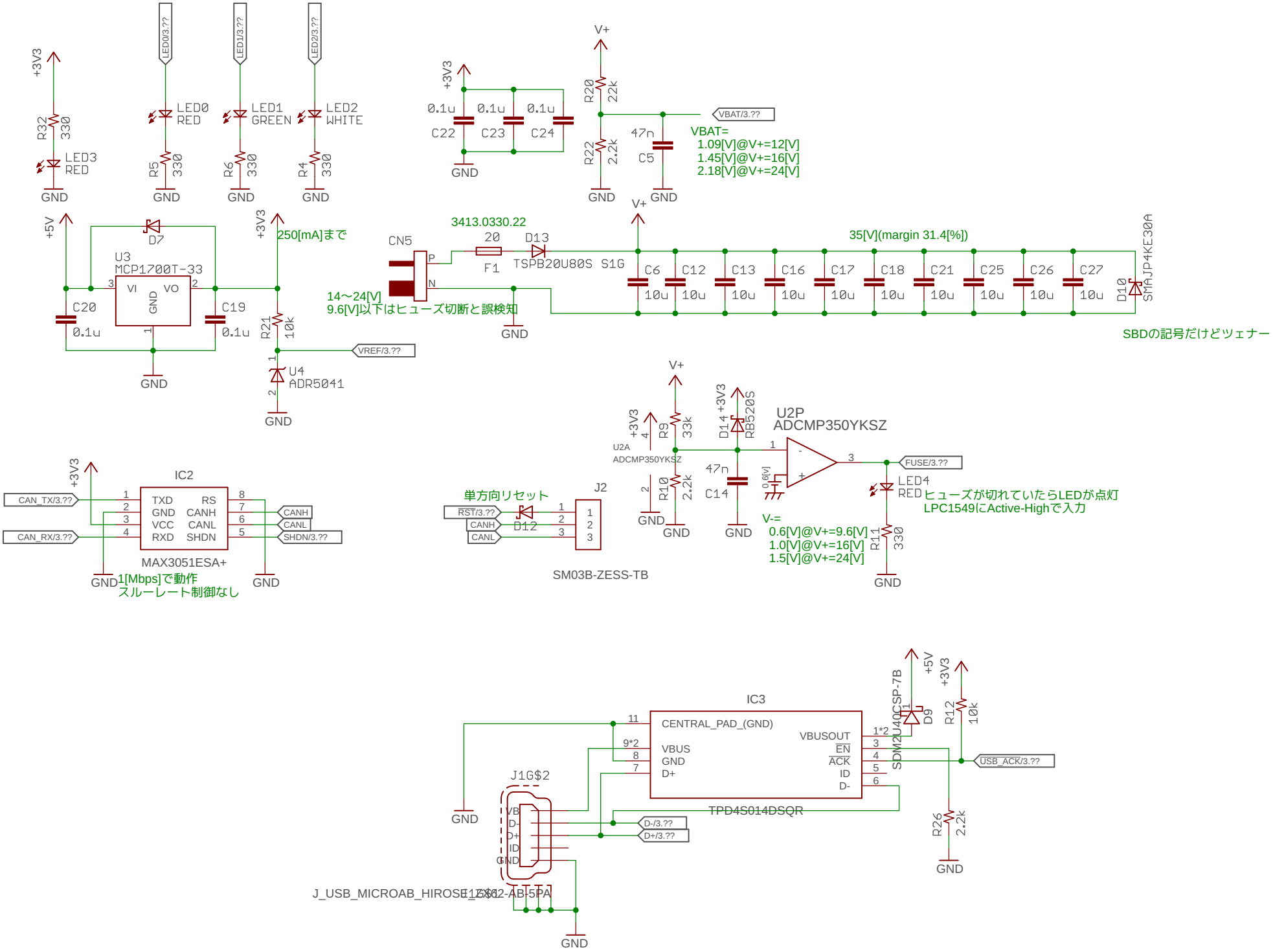
+3V3
R32 330
LED3 RED
GND
LED0/3.??
LED0 RED
R5 330
LED1/3.??
LED1 GREEN
R6 330
LED2/3.??
LED2 WHITE
R4 330
+3V3
0.1u C22
0.1u C23
0.1u C24
V+
R20 22k
R22 2.2k
47n C5
VBAT/3.??
VBAT=
1.09[V]@V+=12[V]
1.45[V]@V+=16[V]
2.18[V]@V+=24[V]
+5V
D7
U3
MCP1700T-33
VI VO GND
C20 0.1u
C19 0.1u
+3V3
250[mA]まで
R21 10k
VREF/3.??
U4
ADR5041
CN5
3413.0330.22
20 F1
D13 TSPB20U80S
S1G
14～24[V]
9.6[V]以下はヒューズ切断と誤検知
35[V](margin 31.4[%])
C6 10u
C12 10u
C13 10u
C16 10u
C17 10u
C18 10u
C21 10u
C25 10u
C26 10u
C27 10u
D10 SMAJP4KE30A
SBDの記号だけどツェナー
IC2
CAN_TX/3.??
CAN_RX/3.??
TXD RS
GND CANH
VCC CANL
RXD SHDN
CANH
CANL
SHDN/3.??
MAX3051ESA+
1[Mbps]で動作
スルーレート制御なし
単方向リセット
RST/3.??
D12
J2
SM03B-ZESS-TB
U2A
ADCMP350YKSZ
R9 33k
R10 2.2k
D14 RB520S
47n C14
U2P
ADCMP350YKSZ
FUSE/3.??
LED4 RED
ヒューズが切れていたらLEDが点灯
LPC1549にActive-Highで入力
V-=
0.6[V]@V+=9.6[V]
1.0[V]@V+=16[V]
1.5[V]@V+=24[V]
R11 330
IC3
CENTRAL_PAD_(GND)
VBUS
GND
D+
VBUSOUT
EN
ACK
ID
D-
TPD4S014DSQR
SDM2U40CSP-7B
D9
R12 10k
USB_ACK/3.??
R26 2.2k
J1G$2
D-/3.??
D+/3.??
J_USB_MICROAB_HIROSE_UX60-AB-5PA

22[uF]が欲しいけど在庫切れが著しいので暫定で10[uF]
35[V](margin 31.4[%])

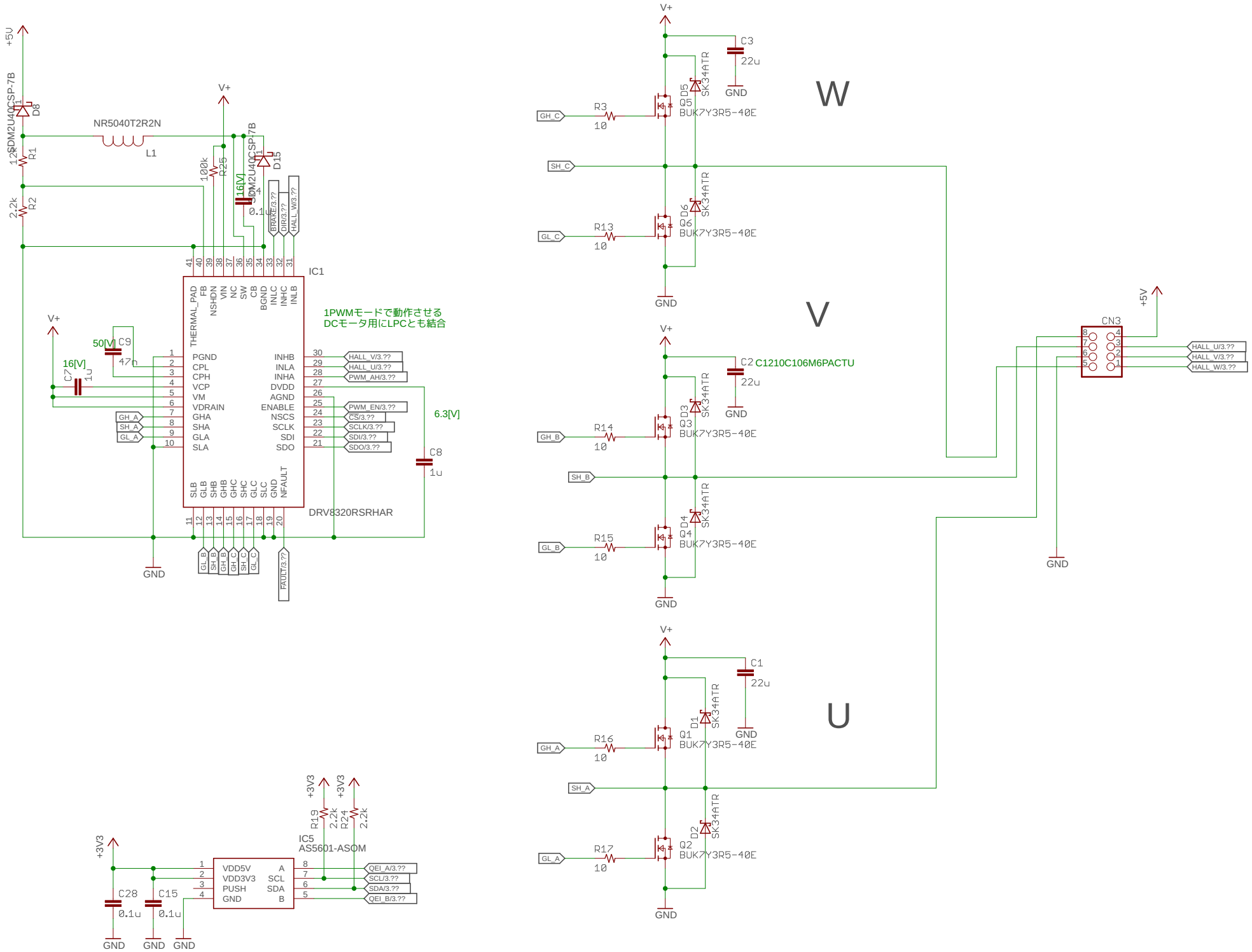

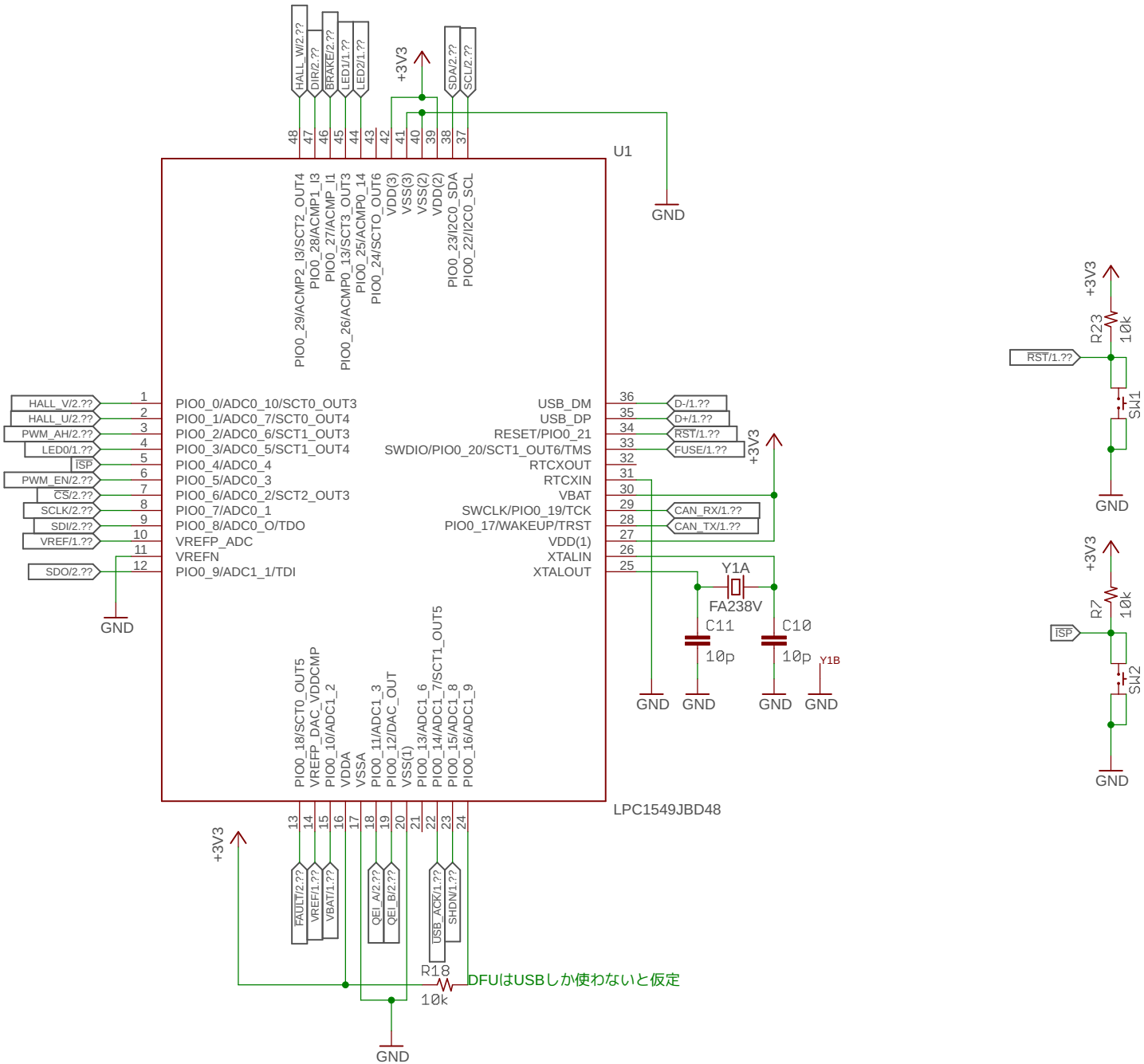
U1
LPC1549JBD48
+3V3
GND
HALL_W/2.??
DIR/2.??
BRAKE/2.??
LED1/1.??
LED2/1.??
SDA/2.??
SCL/2.??
PIO0_29/ACMP2_I3/SCT2_OUT4
PIO0_28/ACMP1_I3
PIO0_27/ACMP_I1
PIO0_26/ACMP0_13/SCT3_OUT3
PIO0_25/ACMP0_14
PIO0_24/SCTO_OUT6
VDD(3)
VSS(3)
VSS(2)
VDD(2)
PIO0_23/I2C0_SDA
PIO0_22/I2C0_SCL
HALL_V/2.??
HALL_U/2.??
PWM_AH/2.??
LED0/1.??
ISP
PWM_EN/2.??
CS/2.??
SCLK/2.??
SDI/2.??
VREF/1.??
SDO/2.??
PIO0_0/ADC0_10/SCT0_OUT3
PIO0_1/ADC0_7/SCT0_OUT4
PIO0_2/ADC0_6/SCT1_OUT3
PIO0_3/ADC0_5/SCT1_OUT4
PIO0_4/ADC0_4
PIO0_5/ADC0_3
PIO0_6/ADC0_2/SCT2_OUT3
PIO0_7/ADC0_1
PIO0_8/ADC0_O/TDO
VREFP_ADC
VREFN
PIO0_9/ADC1_1/TDI
USB_DM
USB_DP
RESET/PIO0_21
SWDIO/PIO0_20/SCT1_OUT6/TMS
RTCXOUT
RTCXIN
VBAT
SWCLK/PIO0_19/TCK
PIO0_17/WAKEUP/TRST
VDD(1)
XTALIN
XTALOUT
D-/1.??
D+/1.??
RST/1.??
FUSE/1.??
CAN_RX/1.??
CAN_TX/1.??
Y1A
FA238V
C11
10p
C10
10p
Y1B
PIO0_18/SCTO_OUT5
VREFP_DAC_VDDCMP
PIO0_10/ADC1_2
VDDA
VSSA
PIO0_11/ADC1_3
PIO0_12/DAC_OUT
VSS(1)
PIO0_13/ADC1_6
PIO0_14/ADC1_7/SCT1_OUT5
PIO0_15/ADC1_8
PIO0_16/ADC1_9
FAULT/2.??
VREF/1.??
VBAT/1.??
QEI_A/2.??
QEI_B/2.??
USB_ACK/1.??
SHDN/1.??
R18
10k
DFUはUSBしか使わないと仮定
R23
10k
SW1
R7
10k
SW2