Cellular Telephony Network

GSM-Based Remote Relay Control System

Project Report

Supervised by:

Dr. Ahmed Fawzy *Dr. Mustafa Sallam*
Eng. Habiba Oraby

Team Members:

Hossam Mohammed AbdAlNabi Hussein
AlHussein Ehab Mohammed Mohammed
Mohammed Salah Sayed Mohammed
Youssef Ismail Salama Ismail
Mohammed Eprahim Zakaryea Mohammed
Shams Zakareya Galal ElSayed

Date: April 29, 2026
QUANTRON

QUANTRON

1. Introduction

This project demonstrates a practical implementation of the Global System for Mobile Communications (GSM) cellular network theory. The system leverages the SIM800L GSM module as a mobile station that communicates with nearby base stations through the standard GSM infrastructure. By utilizing this infrastructure, the system can remotely receive commands via SMS messages or phone calls and use them to control hardware components — specifically, two relay channels that can switch electrical loads such as lamps and other appliances on or off.

The project bridges telecommunications theory with embedded systems engineering, illustrating how the same cellular network principles that enable everyday mobile phone use can be applied to IoT and home-automation contexts.

2. Network Theory

The project is grounded in the architecture of the GSM (2nd Generation) cellular network. GSM organizes communication through a layered hierarchy of components.

2.1 GSM Architecture Overview

The four principal elements of the GSM network exploited in this project are:

- Mobile Station (MS) — Implemented in this project by the SIM800L module together with its SIM card. The MS is responsible for registering with the network, sending/receiving SMS, and establishing voice calls.
- Base Transceiver Station (BTS) — The cell tower that the SIM800L communicates with over the air interface using radio frequency signals.
- Base Station Controller (BSC) — Manages multiple BTSs, handles handovers, and controls radio resources.
- Mobile Switching Center (MSC) — The core switching element that routes calls and SMS between mobile stations and external networks (PSTN, ISDN, data networks).

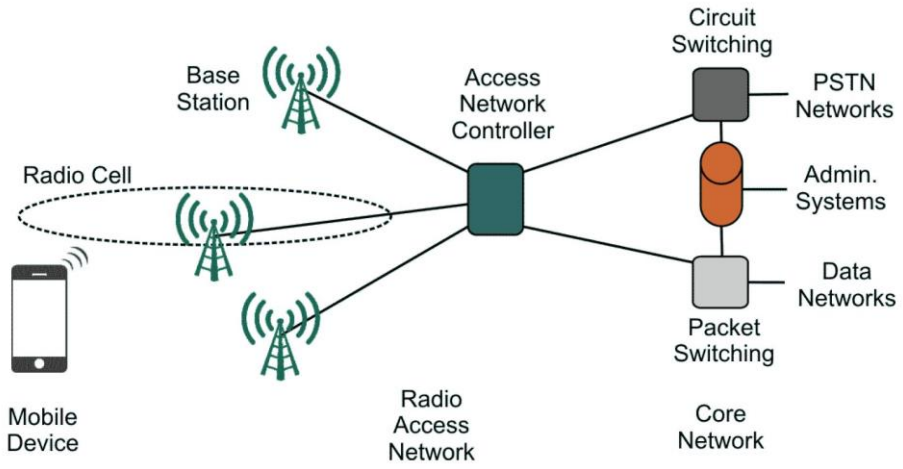

Figure 2.1 — Cellular network architecture showing radio access network and core network

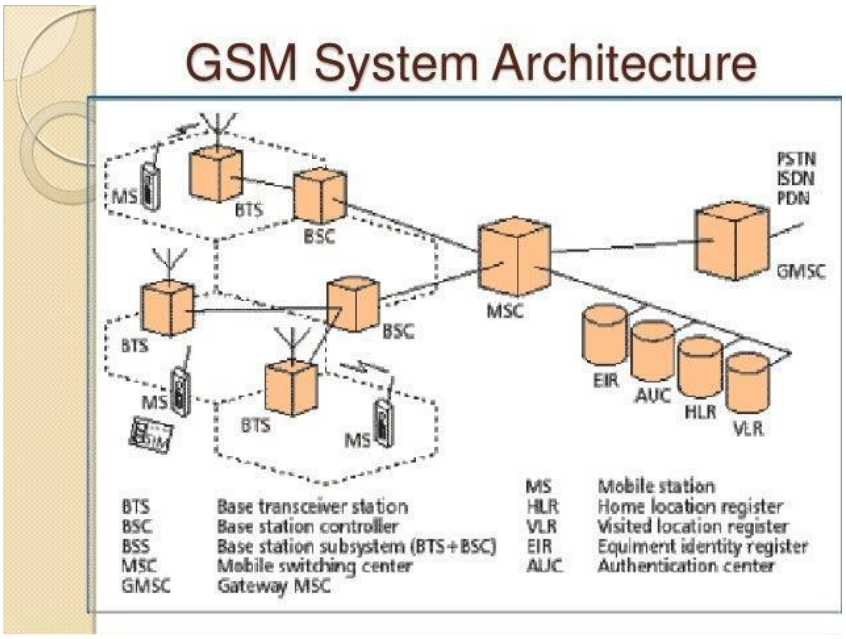

Figure 2.2 — Detailed GSM system architecture (BTS, BSC, MSC, HLR, VLR, EIR, AUC, GMSC)

2.2 How the System Uses the Network

In this project the SIM800L module acts as a fully functional mobile station. Once powered and registered on a 2G GSM network, external users can send SMS commands (e.g., "R1 ON", "R2 OFF") or place a call. The GSM infrastructure routes these signals through BTS → BSC → MSC → back to the SIM800L, which then passes the data to the ATmega328P microcontroller over a UART serial link. The microcontroller parses the command and actuates the appropriate relay.

3. System Block Diagram

The overall architecture of the project is divided into four subsystems: Communication Interface, Central Processing Unit, Control Interface, and User Interface.

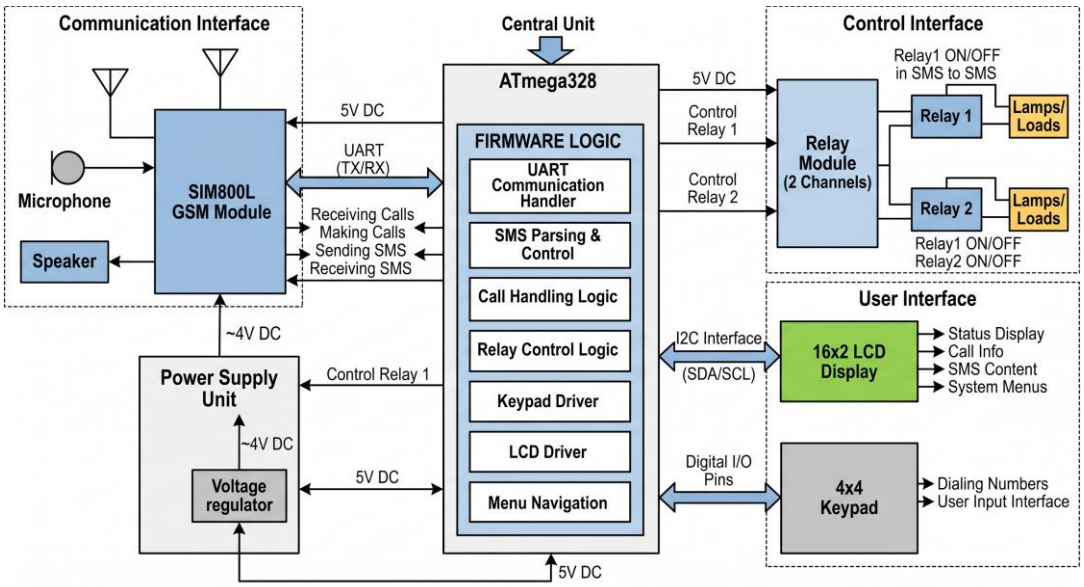

Figure 3.1 — System block diagram showing all subsystems and signal flows

The central unit (ATmega328P) contains seven firmware modules:

- UART Communication Handler — manages serial data exchange with the SIM800L.
- SMS Parsing & Control — extracts relay commands from incoming SMS content.
- Call Handling Logic — detects RING events and +CLIP caller-ID notifications.
- Relay Control Logic — asserts or de-asserts digital output pins connected to the relay module.
- Keypad Driver — scans the 4×4 matrix keypad for key presses.
- LCD Driver — renders status information on the 16×2 I2C LCD.
- Menu Navigation — provides a two-level hierarchical menu system.

4. Components

The table below lists all major components used in the project along with their functions.

Component	Part Number / Model	Function
Microcontroller	ATmega328P-PU	Central processing unit
GSM Module	SIM800L	2G cellular communication
Display	16×2 LCD (I2C)	User interface display
Input	4×4 Membrane Keypad	User input & dialing
Relay Module	YC3F-DC5V-SHC (×2)	Control external loads
Voltage Regulator	LM7805	Regulate supply to 5V DC
Audio Output	Speaker	Voice call audio output
Audio Input	Electret Microphone	Voice call audio input
Crystal	16 MHz XTAL	Clock source for ATmega

4.1 ATmega328P-PU Microcontroller

The ATmega328P-PU is an 8-bit AVR microcontroller from Microchip Technology. It operates at up to 20 MHz with an external crystal oscillator and provides 32 KB of Flash program memory, 2 KB SRAM, and 1 KB EEPROM for non-volatile data storage. Its peripheral set includes multiple digital I/O pins, a 10-bit Analog-to-Digital Converter, hardware timers, and built-in UART, SPI, and I2C communication interfaces — all of which are utilized in this project.

4.2 SIM800L GSM/GPRS Module

The SIM800L is a compact GSM/GPRS module that connects embedded systems to 2G cellular networks. It supports voice calls (with an integrated audio codec), SMS transmission and reception, and GPRS data communication. The module is controlled by the ATmega328P through a UART serial link using standard AT commands. It requires an approximately 3.4–4.4 V supply capable of delivering up to 2 A during GSM transmit bursts.

5. Circuit Diagram & Hardware Testing

5.1 Prototype Test Circuit (Arduino)

Prior to designing the custom PCB, the system was validated on a breadboard prototype using an Arduino Nano as a convenient development platform. This prototype confirmed GSM module operation, keypad scanning, LCD display, and relay switching before committing to PCB fabrication.

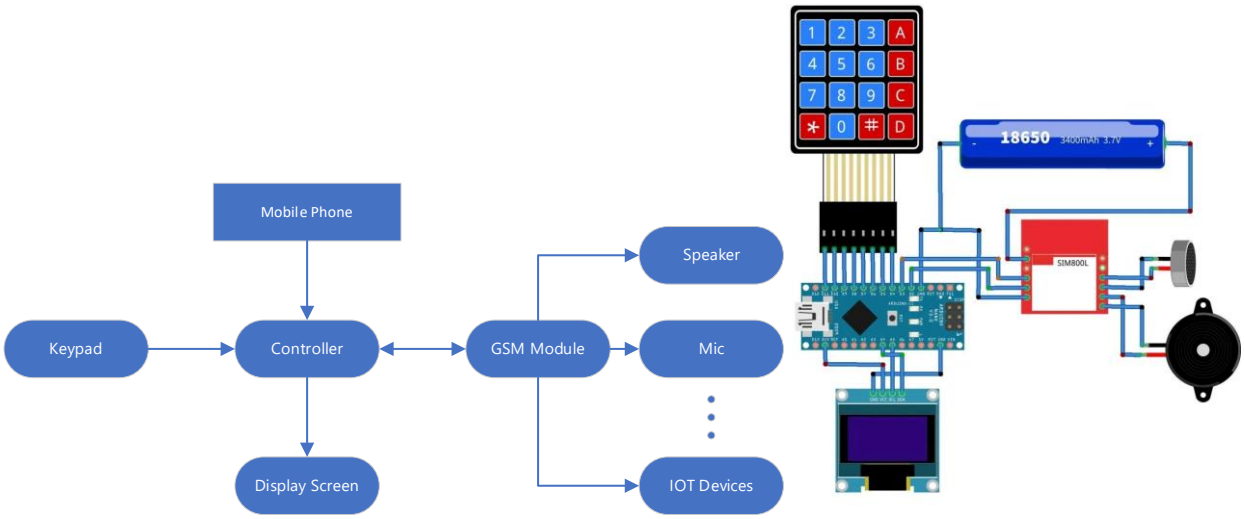

Figure 5.1 — Arduino Nano prototype circuit with SIM800L, keypad, OLED display, and relay module

5.2 Final Circuit Schematic

The final schematic uses the bare ATmega328P-PU in a DIP-28 package, removing the Arduino bootloader overhead. The circuit includes the LM7805 voltage regulator to supply a stable 5 V to the microcontroller and relay module, while the SIM800L is powered directly from the raw input supply (~4 V) through a transistor-based power switch gated by Relay 1.

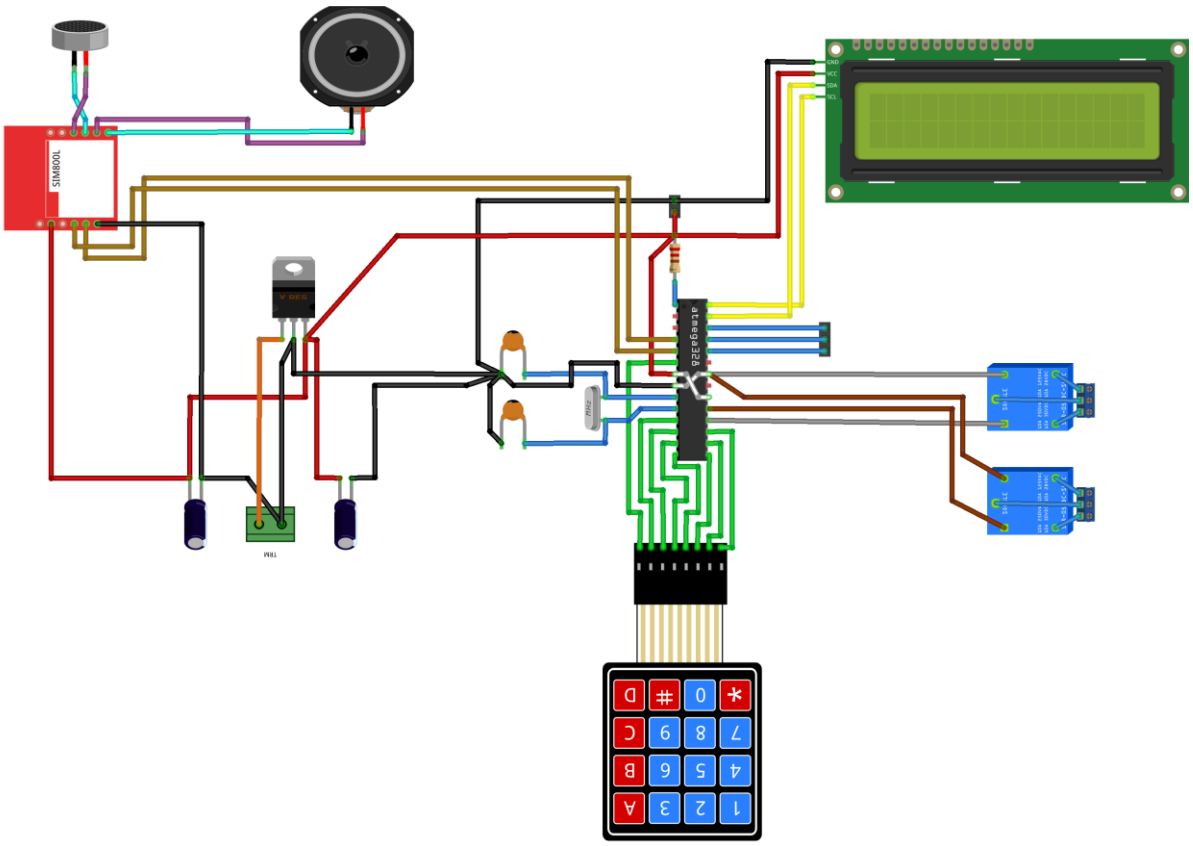

Figure 5.2 — Full schematic: ATmega328P with SIM800L, keypad, 16×2 LCD, relay module, microphone, and speaker

6. Software Design & Flow Charts

The firmware is structured as a cooperative main loop with four distinct processing stages executed sequentially each iteration: Initialization, GSM Processing, Keypad Input, and Display Update. The overall flow is linked through lettered connector nodes (A through G).

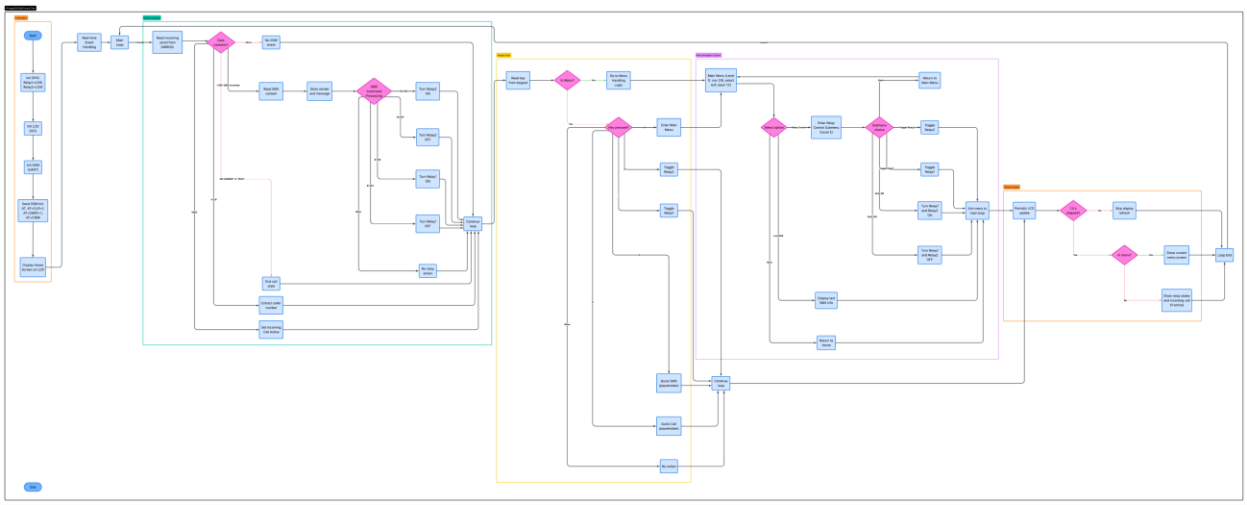

Figure 6.1 — Complete firmware flow chart overview

6.1 Initialization

On power-up the firmware performs the following sequence:

1. Initialize GPIO: set Relay1 and Relay2 output pins to LOW (OFF).
2. Initialize the 16×2 LCD over I2C (SDA/SCL) and display a splash screen.
3. Initialize UART at 9600 baud for SIM800L communication.
4. Send GSM initialization AT commands: AT, AT+CLIP=1, AT+CMGF=1, AT+CNMI.
5. Display home screen on LCD and enter the main loop.

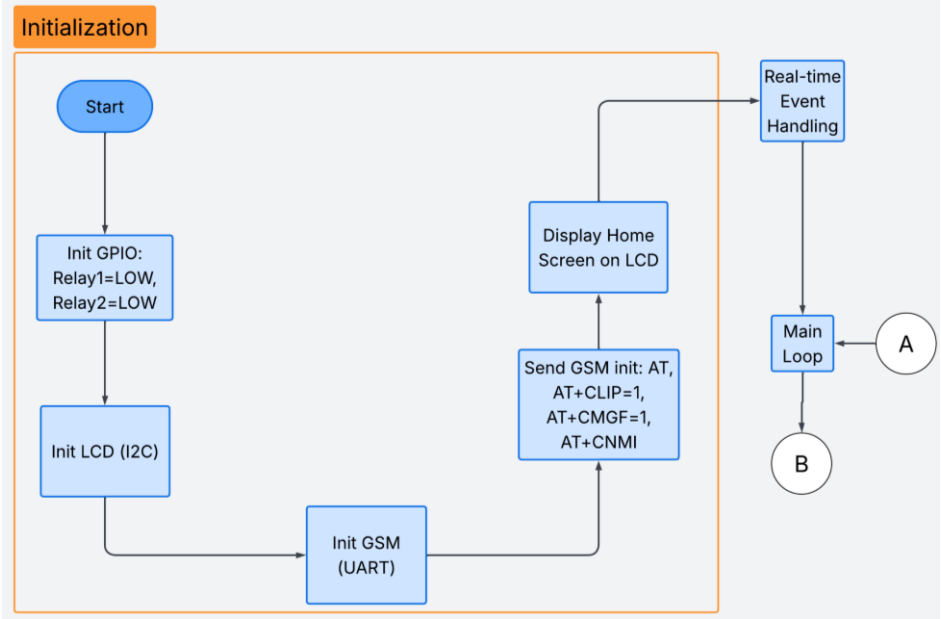

Figure 6.2 — Initialization flow chart

6.2 GSM Event Processing (Node B)

Each main-loop iteration reads available serial data from the SIM800L and classifies it into one of three event types:

- +CMT (SMS received) — The firmware reads the full SMS content, stores the sender number and message body, then passes the message to the SMS Command Processing decision block. Recognized commands include R1 ON, R1 OFF, R2 ON, R2 OFF; unrecognized commands take no relay action.
- RING / +CLIP — An incoming call is detected. The +CLIP response provides the caller ID number. The firmware records the caller number and sets an "incoming call active" flag used by the display module.
- NO CARRIER / BUSY — Terminates the active call state.

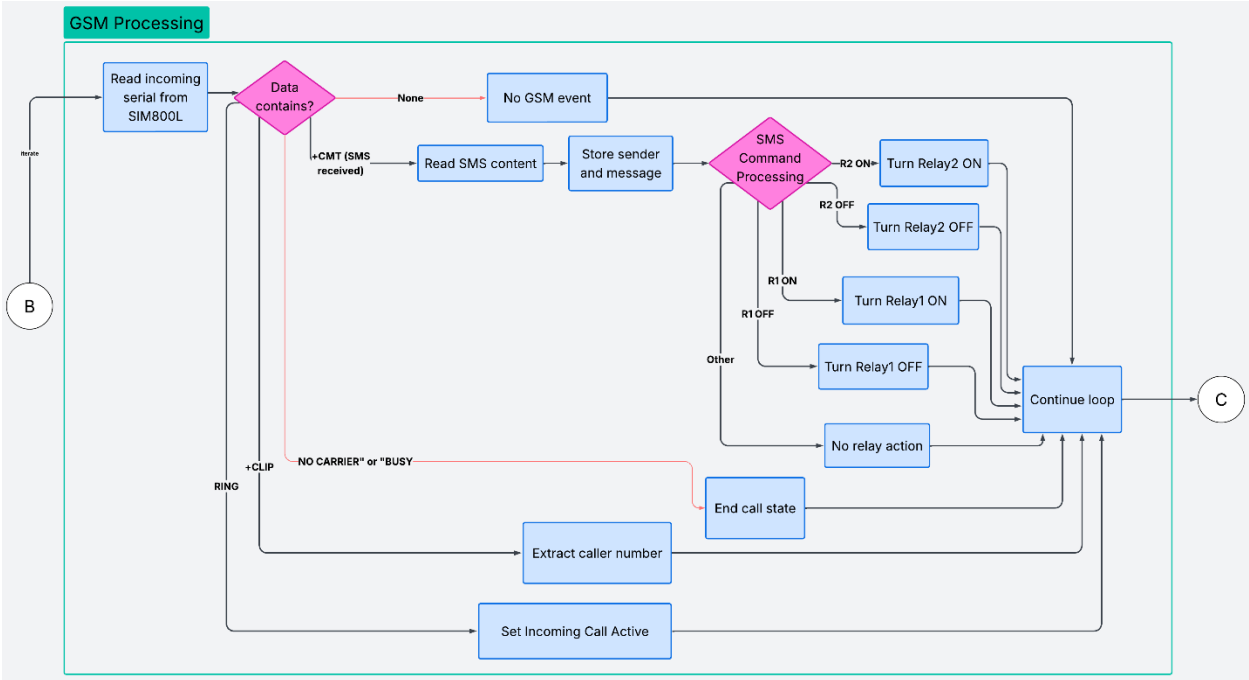

Figure 6.3 — GSM Processing flow chart

6.3 Keypad Input Processing (Node C)

After GSM processing, the firmware reads the current keypad state. If the system is already in the menu mode, all keystrokes are forwarded to the Menu Handling Logic. Otherwise, individual key mappings provide quick actions: key "1" toggles Relay 1, key "2" toggles Relay 2, key "A" enters the main menu, key "B" initiates a quick call (placeholder), and key "C" sends a quick SMS (placeholder). Any other key produces no action.

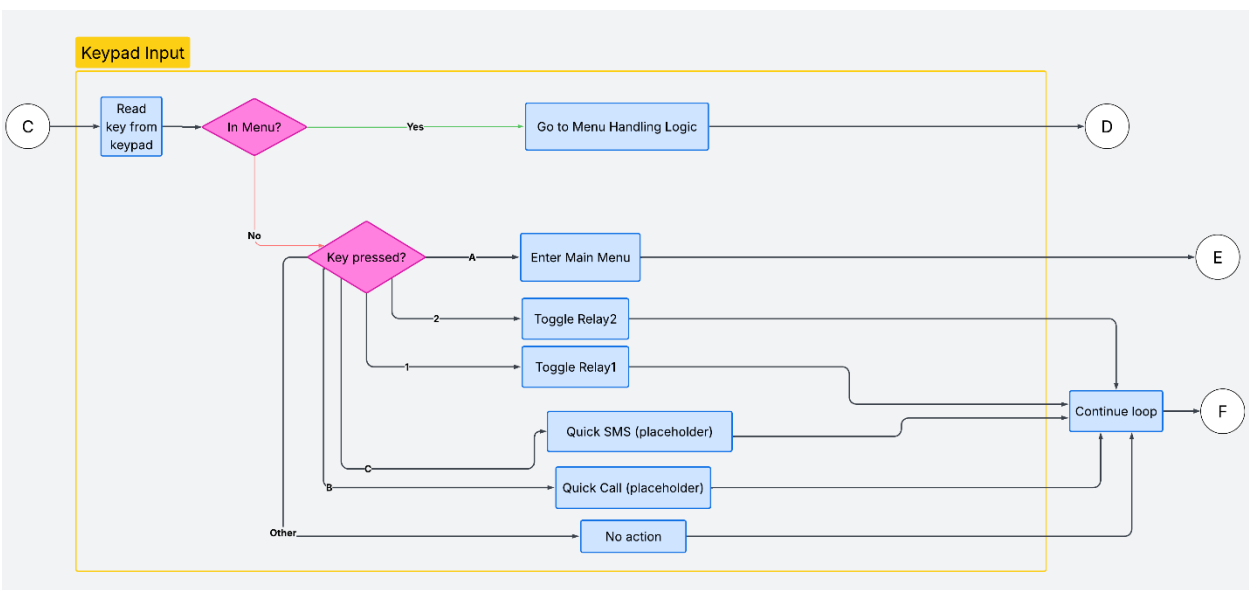

Figure 6.4 — Keypad Input flow chart

6.4 Menu Navigation System (Node D/E)

The menu system is a two-level hierarchy. The Main Menu (Level 1) allows navigation with keys "2"/"8", selection with "A"/"#", and exit with "*"/"D". The available menu options are: Relay Control (enters Level 2 submenu), Last SMS (displays the last received SMS and sender), and Return to Home. In the Relay Control Submenu (Level 2) the user can toggle Relay 2, toggle Relay 1, turn both relays ON, or turn both relays OFF before exiting back to the main loop.

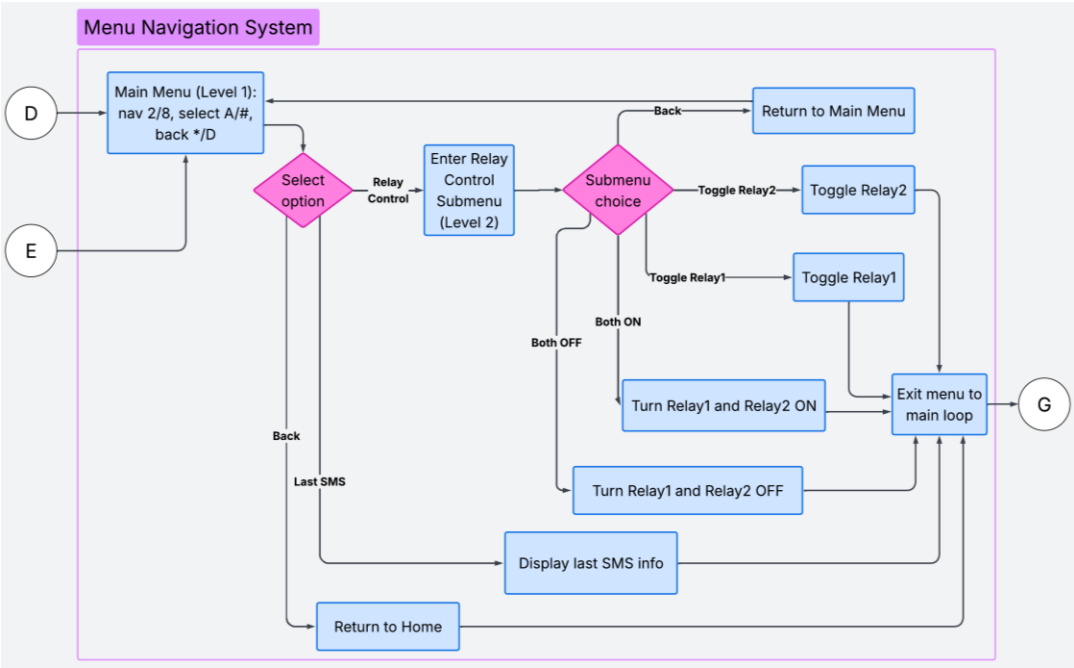

Figure 6.5 — Menu Navigation System flow chart

6.5 Display Update (Nodes F/G)

The display module runs on a 1.5-second periodic timer to avoid excessive I2C traffic. On each update cycle the firmware checks whether the system is in menu mode: if yes, it renders the current menu screen; if no, it shows the relay states (ON/OFF for Relay 1 and Relay 2) and any active incoming-call notification. After the display step, execution returns to node A (top of the main loop).

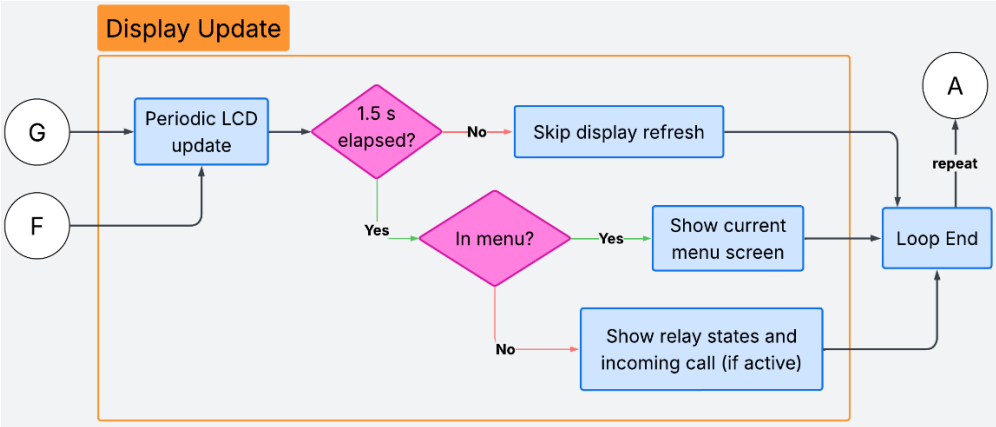

Figure 6.6 — Display Update flow chart

7. PCB Design

The printed circuit board was designed using EDA software (Eagle/KiCad) and manufactured in-house using the toner-transfer method followed by FeCl3 (ferric chloride) chemical etching on a single-sided copper-clad laminate board. The QUANTRON team logo is included in the silk screen layer.

7.1 PCB Layout (EDA Design)

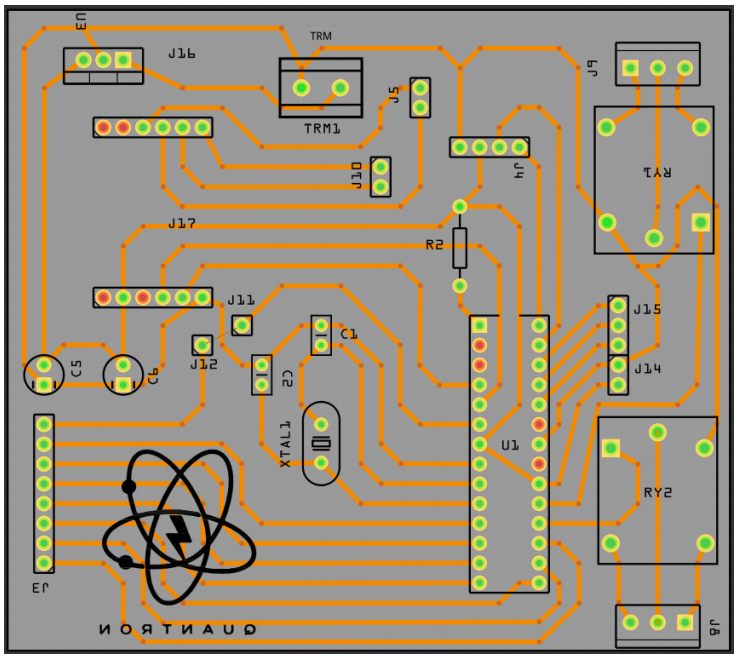

Figure 7.1 — PCB layout in EDA software showing copper traces, pads, and component placement

7.2 Print Files

Two mirror-image print files were generated: the copper bottom layer (trace routing) and the silk-screen top layer (component placement reference). These are printed on transparency film before transfer.

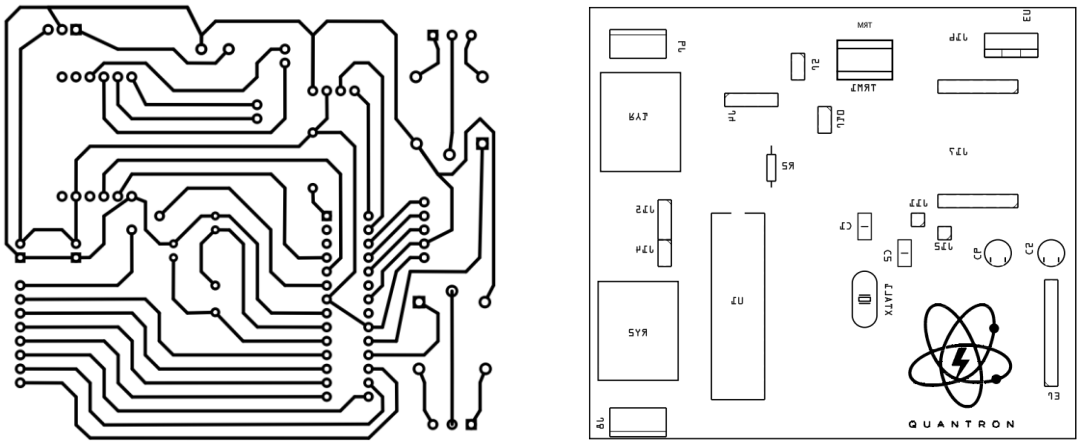

Figure 7.2 — Final print files: copper bottom (left) and silk-screen top mirror (right)

8. Implementation

8.1 PCB Fabrication Process

The fabrication followed a standard DIY PCB process:

- The copper trace pattern was laser-printed on glossy paper, then heat-transferred onto the copper-clad board using an iron.
- The board was immersed in a ferric chloride (FeCl3) solution to etch away all exposed copper, leaving only the protected traces.
- After etching, the toner was removed with acetone, and drill holes were made for through-hole component pins.

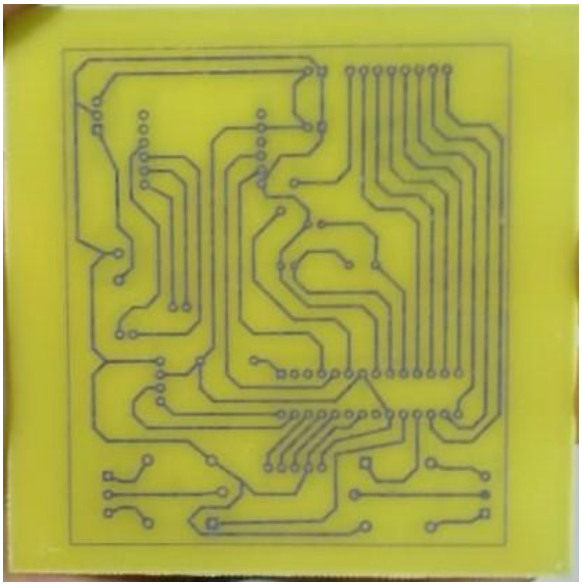

Figure 8.1 — Etched PCB showing the copper trace pattern after FeCl3 etching

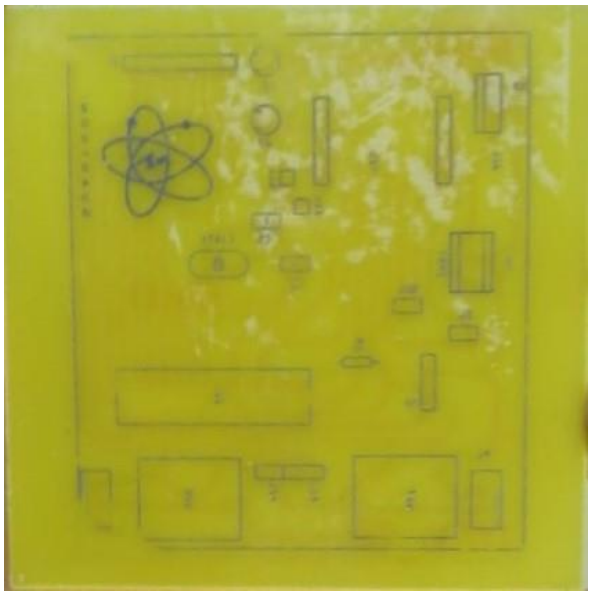

Figure 8.2 — PCB silk-screen top layer after toner transfer showing component placement guides

8.2 Component Assembly & Soldering

All through-hole components were manually placed and soldered onto the etched PCB. The ATmega328P-PU was mounted in a DIP-28 socket for easy replacement. The SIM800L module, relay modules (YCRELAY YC3F-DC5V-SHC), capacitors, crystal oscillator, and connectors were subsequently soldered and inspected.

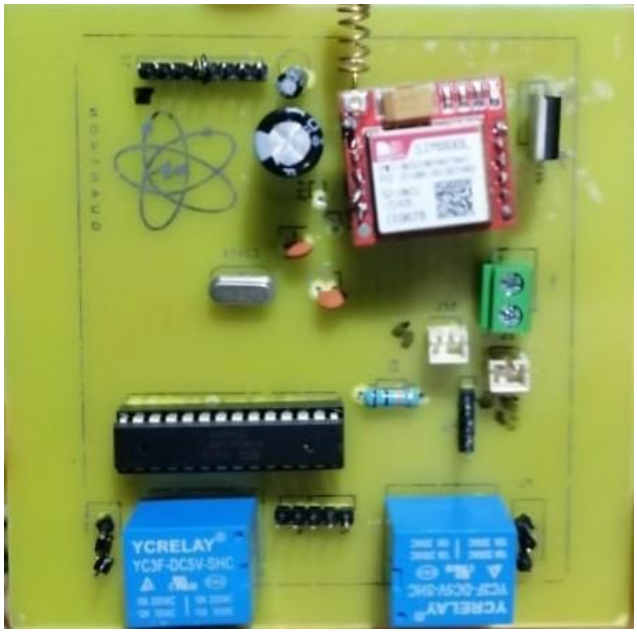

Figure 8.3 — Assembled PCB with all components soldered, including SIM800L module and dual relay modules

9. Conclusion

This project successfully demonstrates the application of GSM cellular network theory to a practical embedded control system. By integrating the SIM800L GSM module with an ATmega328P microcontroller, the system achieves remote relay control through both SMS commands and call detection, a local keypad menu interface, and real-time status display on an LCD — all housed on a custom-fabricated PCB.

The project validates that 2G GSM infrastructure, despite being a mature technology, remains a robust and cost-effective platform for IoT and remote-control applications, especially in areas where internet connectivity may be limited. Future enhancements could include adding password-protected SMS authorization, expanding to more relay channels, and transitioning to a 4G LTE module for improved reliability and network coverage.