Madhuben & Bhanubhai Patel Institute of Technology

(A Constituent College of CVM University)

COMPUTER ENGINEERING DEPARTMENT

Report on

Designing and Testing binary Adder and Subtractor using Logisim

In

Computer Organization Architecture (202040401)

Submitted By

Harshil Vinodbhai Parmar (12502040703005)

Mini Project Report

Designing and Testing an Adder–Subtractor Circuit using Logisim

Objectives

• To understand the working of binary addition and subtraction.
• To design an Adder–Subtractor circuit using logic gates.
• To implement the circuit using Logisim software.
• To test the circuit using different input combinations.
• To analyze the output results and verify correct operation.

Introduction

Digital systems rely heavily on arithmetic operations such as addition and subtraction.
These operations are performed inside the Arithmetic Logic Unit (ALU) of a processor.
An Adder–Subtractor circuit is an important digital circuit that can perform both addition and subtraction operations using the same hardware.
This project demonstrates how such a circuit can be designed using logic gates and simulated using Logisim.

Theory

Half Adder:
A half adder adds two binary digits and produces a sum and carry output.

Full Adder:
A full adder adds three binary inputs (A, B, and Carry In) and produces Sum and Carry Out.

Subtraction using 2's Complement:
Binary subtraction can be performed using 2's complement.
To subtract B from A:
1. Take the complement of B.
2. Add 1.
3. Add the result to A.

Adder–Subtractor Circuit:
An Adder–Subtractor circuit uses XOR gates and full adders to perform both operations.
The XOR gates invert the B input when subtraction is selected.

Components Used

- XOR Gates
- Full Adders
- Input Pins
- Output Pins
- Constant values
- Wires
- Logisim simulation environment

Block Diagram

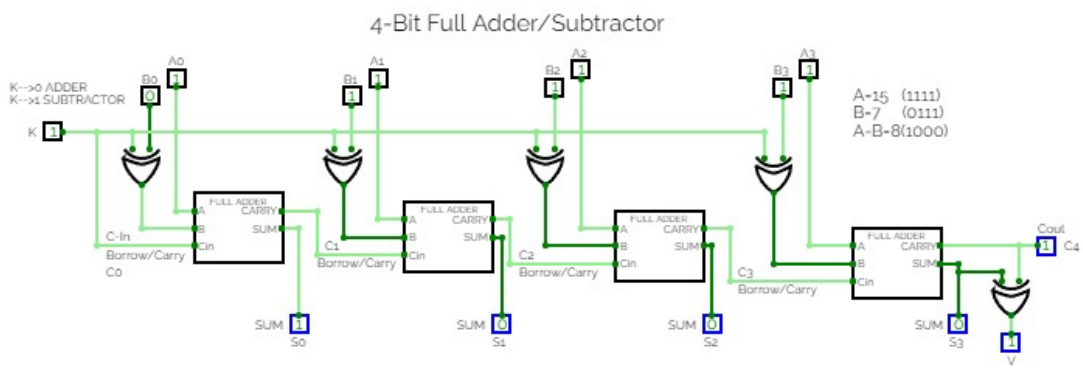

The Mode input controls whether the circuit performs addition or subtraction.
Mode = 0 → Addition
Mode = 1 → Subtraction

Working Principle

The circuit works by controlling the B input using XOR gates.
When Mode = 0:
The XOR gate allows B to pass unchanged, and the circuit performs addition.

When Mode = 1:
The XOR gate inverts B, and the carry input becomes 1.

This effectively performs A + (2's complement of B), which is subtraction.

Logisim Implementation Steps

1. Open Logisim software.
2. Create input pins for A, B, and Mode.
3. Place XOR gates from the Gates library.
4. Connect B input to XOR gate and Mode as the control.
5. Connect XOR outputs to the Full Adder inputs.
6. Connect Mode to the Carry In of the first Full Adder.
7. Connect output pins to display Sum/Difference and Carry.
8. Test the circuit with different input values.

Truth Table

A	B	Mode	Operation	Result
0	0	0	Add	0
0	1	0	Add	1
1	0	0	Add	1
1	1	0	Add	10
1	0	1	Subtract	1
1	1	1	Subtract	0

Testing

Example Test Cases:

Case 1:
A = 3 (0011)

B = 2 (0010)
Mode = 0
Output = 0101 (5)

Case 2:
A = 6 (0110)
B = 3 (0011)
Mode = 1
Output = 0011 (3)

Case 3:
A = 5 (0101)
B = 1 (0001)
Mode = 0
Output = 0110 (6)

Applications

- Arithmetic Logic Units (ALU)
- Digital computers
- Microprocessors
- Embedded systems
- Digital calculators

Advantages

Advantages of Adder–Subtractor Circuit

1. **Performs Two Operations in One Circuit**
   - The same circuit can perform **both addition and subtraction** using a control signal.
2. **Efficient Hardware Utilization**
   - Instead of designing separate circuits for addition and subtraction, a **single circuit is used**, saving hardware.
3. **Simple Design**
   - The circuit can be built easily using **XOR gates and full adders**.
4. **Used in ALU of Processors**
   - It is an important component of the **Arithmetic Logic Unit (ALU)** in computers.
5. **Easy to Simulate and Test**
   - The circuit can be easily tested in simulation software like Logisim.

Disadvantages

Disadvantages of Adder–Subtractor Circuit

1. **Propagation Delay**
   - **In multi-bit circuits, the carry must pass through each full adder, which slows down the operation.**
2. **Complex for Large Bit Systems**
   - **When the number of bits increases (8-bit, 16-bit), the circuit becomes more complex.**
3. **Higher Hardware Requirement**
   - **Additional gates such as XOR gates and full adders increase hardware usage.**
4. **Power Consumption**
   - **More logic gates lead to higher power consumption in larger circuits.**
5. **Limited Speed Compared to Advanced Adders**
   - **Ripple-carry based adder–subtractors are slower than advanced adders like carry look-ahead adders.**

Conclusion

The Adder–Subtractor circuit was successfully designed and simulated using Logisim.
The circuit correctly performed addition and subtraction operations depending on the mode input.
This project helped in understanding the internal working of arithmetic circuits used in digital computers.

References

• Digital Logic Design textbooks
• Logisim User Guide
• Computer Organization and Architecture notes

- https://www.geeksforgeeks.org/digital-logic/4-bit-binary-adder-subtractor/ (for research)
- https://prepbytes.com/blog/4-bit-adder-subtractor/ (for blockdiagram)