LAB 3
SIMULATION OF NETWORK DEVICES USING CISCO PACKET TRACER

OBJECTIVES

The primary objectives of this laboratory exercise are:

• To develop proficiency in using Cisco Packet Tracer through hands-on exploration of its simulation tools and network device emulation capabilities.

• To evaluate the operational characteristics of different network devices including hubs, switches, bridges, routers, and repeaters, comparing their performance and functionality.

THEORY

Network Simulation Platform

Cisco Packet Tracer serves as a comprehensive network simulation environment designed for educational purposes. This software-based solution enables users to construct, configure, and analyze virtual network infrastructures without requiring physical hardware investments. The platform provides an interactive interface where network components are represented as graphical objects, facilitating the visualization of data flow and network behavior. Through its simulated command-line interface, users can configure Cisco networking equipment using industry-standard commands, bridging the gap between theoretical knowledge and practical implementation.

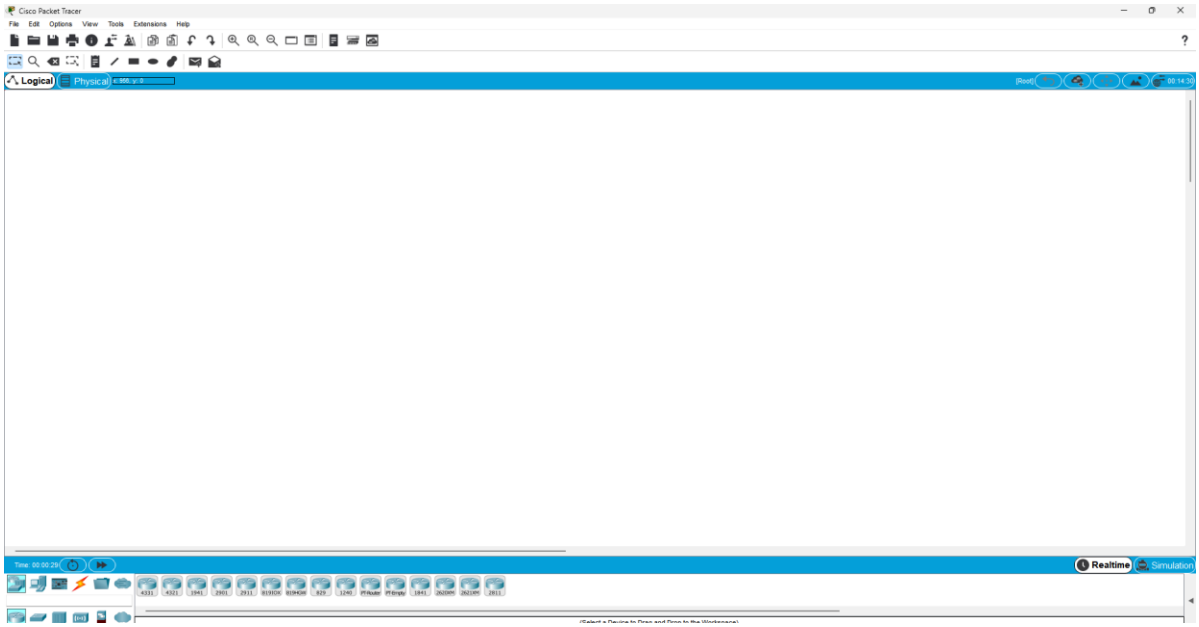

Network Hub: Physical Layer Device

A network hub represents the simplest form of network connectivity device, functioning at Layer 1 of the OSI model. This device serves as a central connection point for multiple network nodes, operating on the principle of signal amplification and redistribution.

Operational Characteristics: When a hub receives an electrical signal from any connected port, it regenerates and broadcasts this signal to all other active ports simultaneously. This broadcast mechanism occurs regardless of the intended recipient, as hubs lack the intelligence to interpret or direct traffic. The device does not maintain any addressing information or memory of connected devices.

Implementation Context: Hubs are suitable for small-scale networks with minimal traffic requirements. Due to their broadcast nature, they create shared collision domains, which can lead to network congestion in larger deployments. Modern networks have largely phased out hubs in favor of more intelligent switching technologies.

Network Switch: Data Link Layer Intelligence

Operating at Layer 2 of the OSI model, a network switch represents a significant advancement in networking technology. Unlike hubs, switches employ intelligent packet-switching mechanisms to efficiently manage network traffic.

Operational Characteristics: Switches maintain a dynamic MAC address table that maps hardware addresses to specific physical ports. During initial operation, switches operate in learning mode, capturing source MAC addresses from incoming frames. Once the MAC address table is populated, the switch transitions to forwarding mode, where it performs unicast transmission by sending frames only to the destination port. This selective forwarding significantly reduces unnecessary network traffic.

Implementation Context: Switches form the backbone of modern enterprise networks due to their ability to eliminate collision domains and optimize bandwidth utilization. They support full-duplex communication and can handle multiple simultaneous transmissions, making them ideal for high-traffic environments requiring efficient data management.

Router: Network Layer Interconnection

Routers operate at Layer 3 of the OSI model and serve as intelligent intermediaries between distinct network segments. Their primary function involves making forwarding decisions based on logical IP addresses rather than physical MAC addresses.

Operational Characteristics: Routers maintain routing tables containing network topology information and utilize routing protocols to determine optimal packet paths. When a packet arrives at a router, the device examines the destination IP address and consults its routing table to identify the next hop. Routers also perform protocol translation and can connect networks using different media types or communication protocols.

Implementation Context: Routers are essential for interconnecting Local Area Networks (LANs) with Wide Area Networks (WANs) and for segmenting large networks into smaller, manageable subnets. They provide the foundation for internet connectivity and enable communication between geographically distributed network segments.

Gateway: Network Access Point

A gateway functions as a network access point that enables communication between networks utilizing different protocols or architectures. In many implementations, a router configured with specific gateway functionality serves this purpose.

Operational Characteristics: Gateways perform protocol translation when necessary and route packets destined for IP addresses outside the local network segment. They serve as the default route for devices within a subnet, ensuring that non-local traffic is properly forwarded to external networks.

OBSERVATION

1. Hub Implementation

Device Name	Interface	IP Address	Subnet Mask
Utsav-PC0	FastEthernet0	192.168.1.1	255.255.255.0
Utsav-PC1	FastEthernet0	192.168.1.2	255.255.255.0
Utsav-PC2	FastEthernet0	192.168.1.3	255.255.255.0
Utsav-PC3	FastEthernet0	192.168.1.4	255.255.255.0

• A star topology was created using a hub. All PCs were connected to the hub via copper straight-through cables.

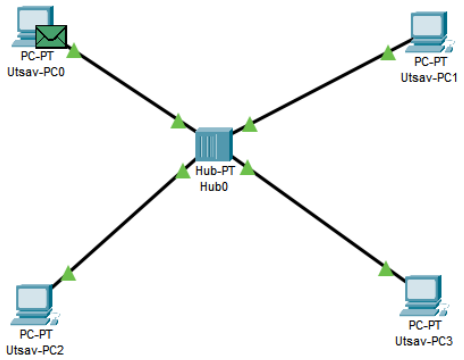

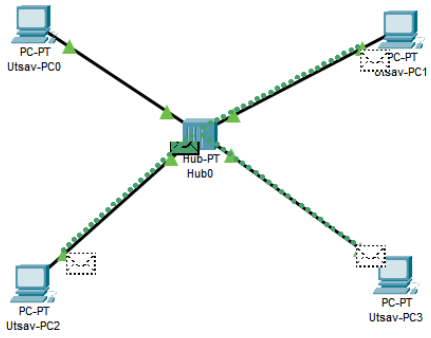

2. Switch Implementation

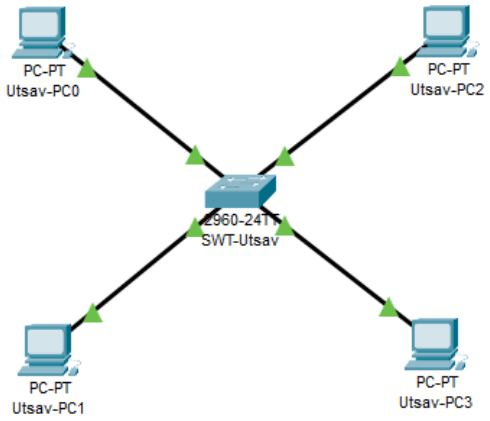

Device Name	Interface	IP Address	Subnet Mask
Utsav-PC0	FastEthernet0	10.10.10.1	255.0.0.0
Utsav-PC1	FastEthernet0	10.10.10.2	255.0.0.0
Utsav-PC2	FastEthernet0	10.10.10.3	255.0.0.0
Utsav-PC3	FastEthernet0	10.10.10.4	255.0.0.0

• Multiple devices were connected to the switch.

• Unlike the hub, once the switch learned MAC addresses, data was sent directly (unicast) to the destination without affecting other ports.

3. Router Implementation

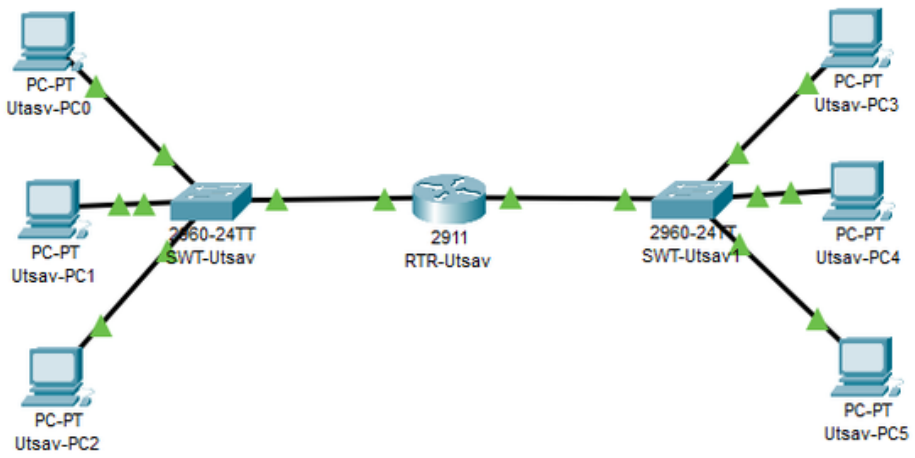

Device Name	Interface	IP Address	Subnet Mask	Gateway
Router0	Gig0/0 (LAN1)	192.168.1.4	255.255.255.0	N/A
Router0	Gig0/1 (LAN2)	10.10.10.4	255.255.255.0	N/A
PC-LAN1	FastEthernet0	192.168.1.1–1.3	255.255.255.0	192.168.1.4
PC-LAN2	FastEthernet0	10.10.10.1–10.10.10.3	255.255.255.0	10.10.10.4

• Router connected two LANs (LAN1: 192.168.1.x, LAN2: 10.10.10.x).

• Switch for LAN1 connected to Router Gig0/0; Switch for LAN2 connected to Router Gig0/1.

• The router acted as a gateway, allowing packets to move between the two networks.

DISCUSSION

This lab provided hands-on experience with hubs, switches, and routers using Cisco Packet Tracer, clearly showing how each device handles network traffic at different layers.

CONCLUSION

The exercise successfully connected theory with practice, improving understanding of network devices and their appropriate use in real-world network design and troubleshooting.