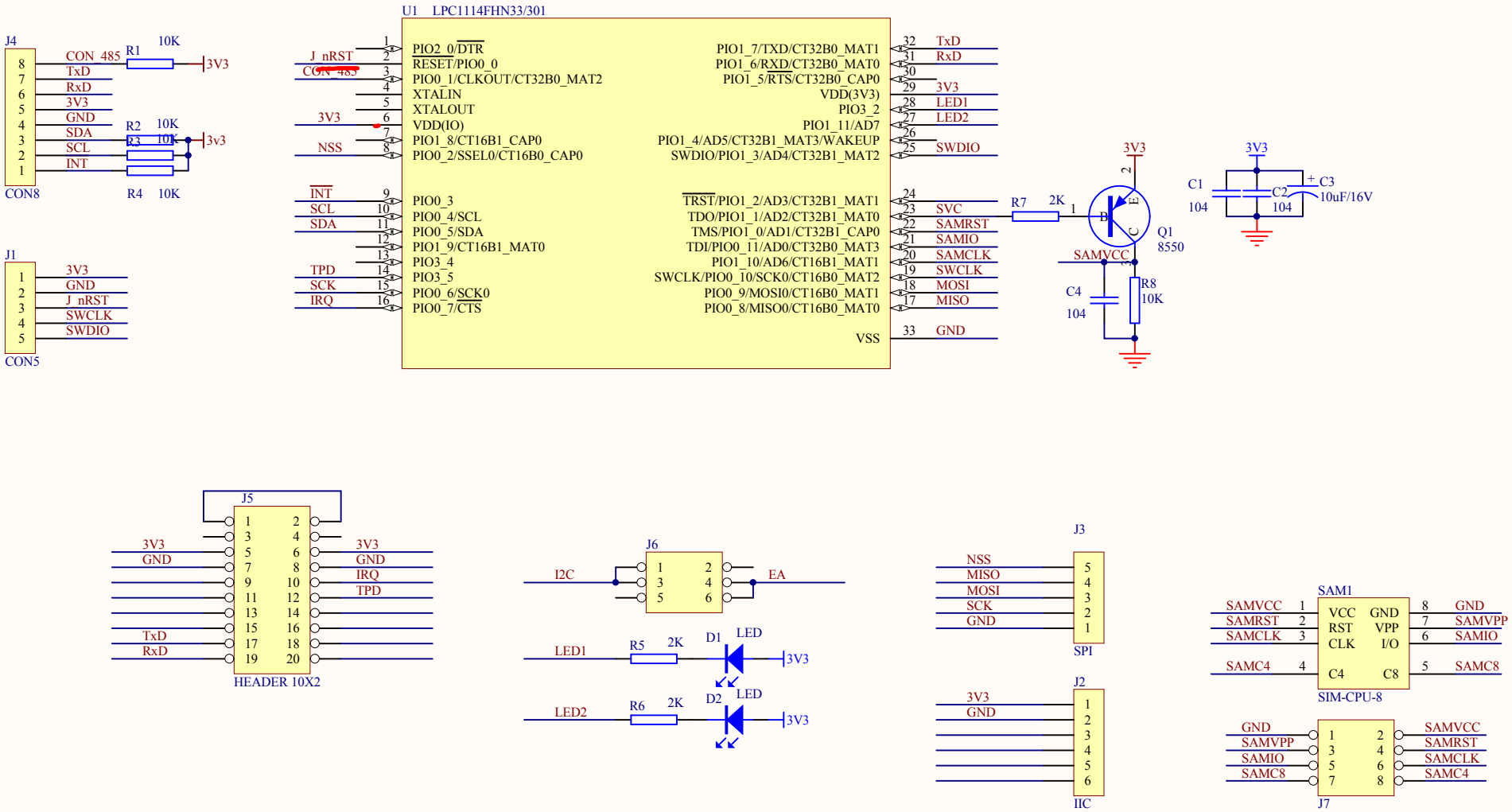

Title		
Size A4	Number	Revision
Date: 2013-4-10		Sheet of
File: F:\ 12 \..\M0 PACK V1.01.SchDoc		Drawn By:

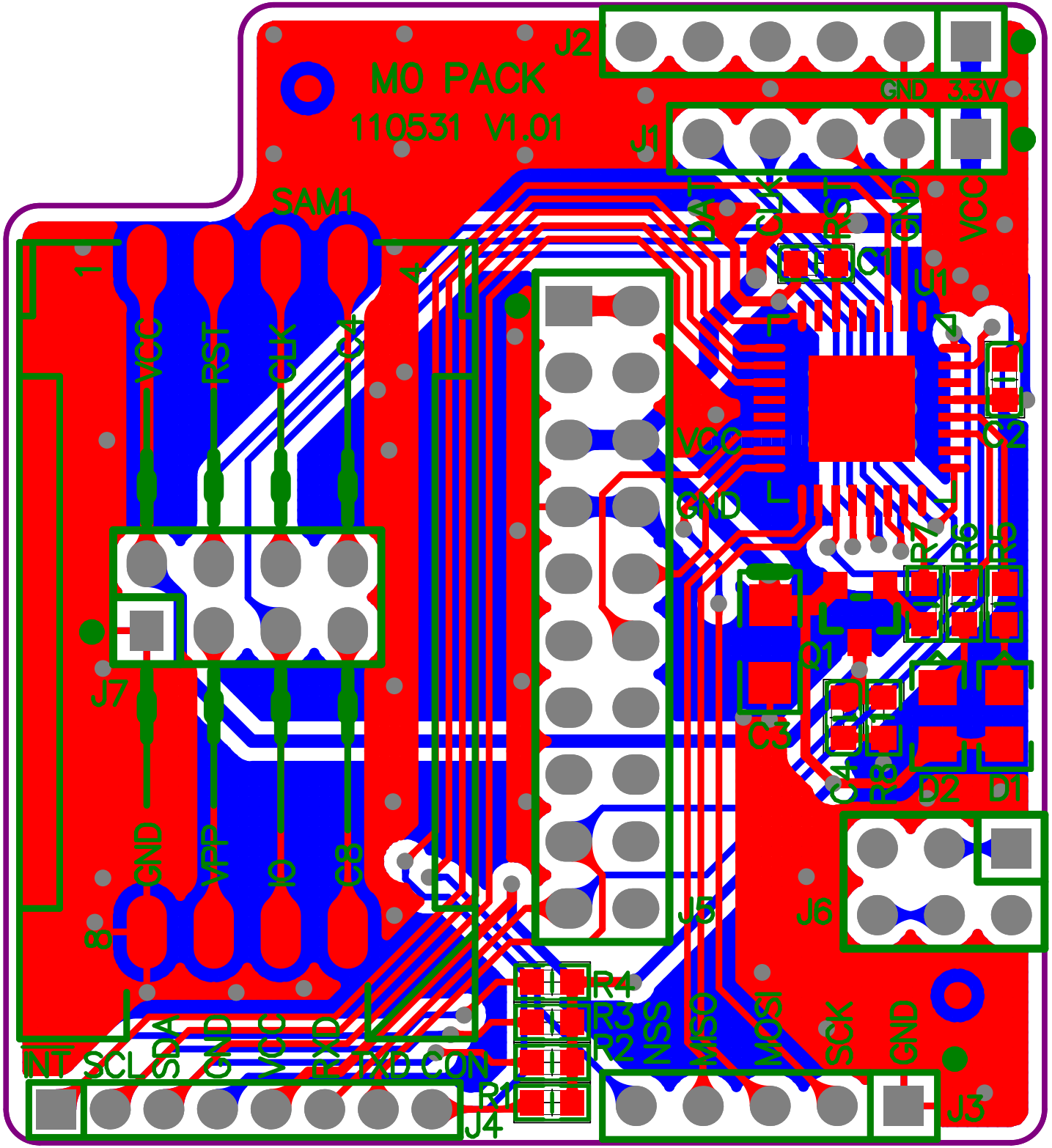
M0 PACK
110531 V1.01
J2
GND
3.3V
J1
SAM1
VCC
RST
CLK
C4
GND
VPP
IO
C8
J7
INT
SCL
SDA
GND
VBS
RX
TXD
CON
J4
R1
R2
R3
R4
NSS
MISO
MOSI
SCK
GND
J3
J5
J6
VCC
GND
U1
C1
C2
C3
C4
R7
R6
R5
R8
Q1
D2
D1