EAST WEST UNIVERSITY

LAB PROJECT

"Bench Vice Sliding Jaw"

Department of CSE

Semester: Spring 2026

Course Code: CSE 200

Course Title: Engineering Drawing

Section: 09

Submitted By:

Name: Arup Bhowmik Pritom

Id: 2025-2-60-330

Department: CSE

Submitted To:

Name: MAMRD

Designation: Lecturer

Department: CSE

Date of Submission: 14/04/2026

Project Title:

Design and Modeling of a Bench Vice Sliding Jaw

Project Description:

Overview: This project involves the precise 3D modeling and 2D engineering drafting of a **Sliding Jaw**, a critical component of a standard Bench Vice. The object was selected for its geometric complexity, requiring a combination of advanced AutoCAD operations to demonstrate technical proficiency in Computer-Aided Design.

Technical Details: The model was developed using a bottom-up approach, starting with a 2D profile based on standard mechanical dimensions. The primary features of this design include:

- **3D Solid Modeling:** Created using EXTRUDE and UNION operations to ensure a manifold solid structure.
- **Boolean Operations:** Integrated slots and screw housing holes were precisely crafted using the SUBTRACT command to mimic real-world machining processes.
- **Geometric Precision:** The design incorporates curved profiles (fillets) and angular surfaces to ensure realistic mechanical functionality.

Drafting & Projections: To provide a comprehensive engineering view, the project includes:

- **Orthographic Projections:** I used **3rd Angle Projection**, showcasing the Front, Top, and Side views with accurate hidden line details.
- **Isometric View:** 2D isometric representation to provide a clear spatial understanding of the component.
- **3D Modeling:** high-fidelity 3D solid model representing the final physical form of the Bench Vice Sliding Jaw, showcasing its structural integrity and mechanical design.
- **Annotations:** Comprehensive dimensioning and labeling to ensure the design meets industrial documentation standards.

Software Used: AutoCAD 2023

Orthographic Projection (3rd Angle) :

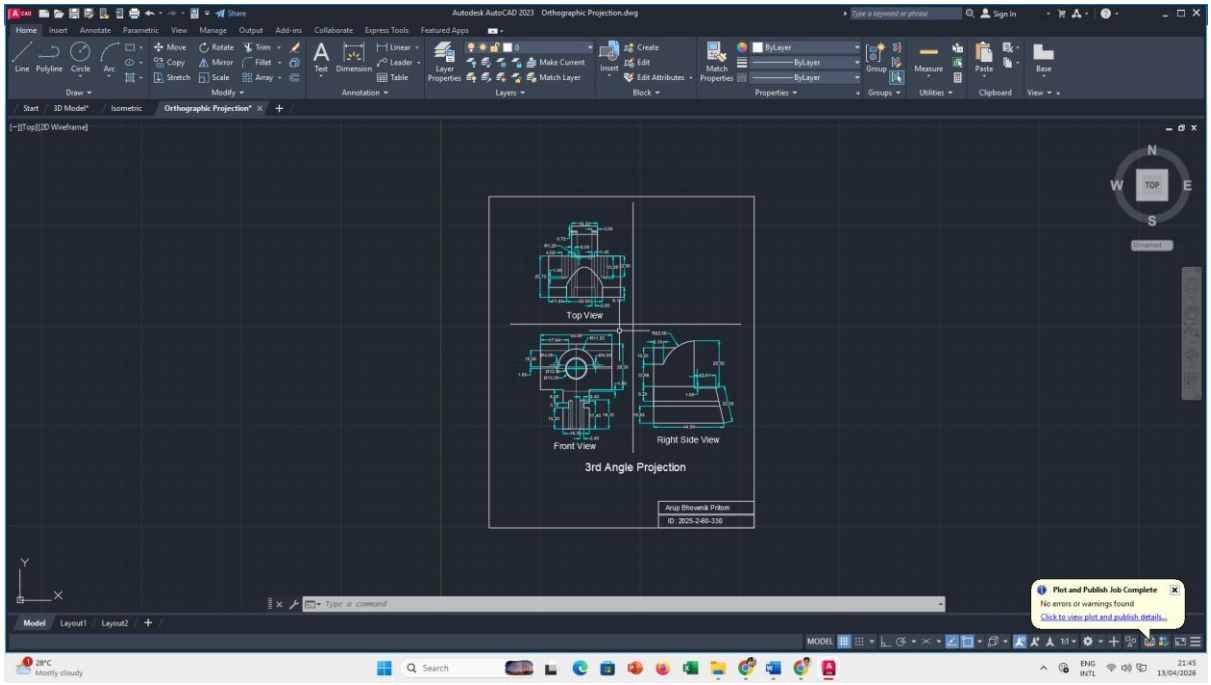

`

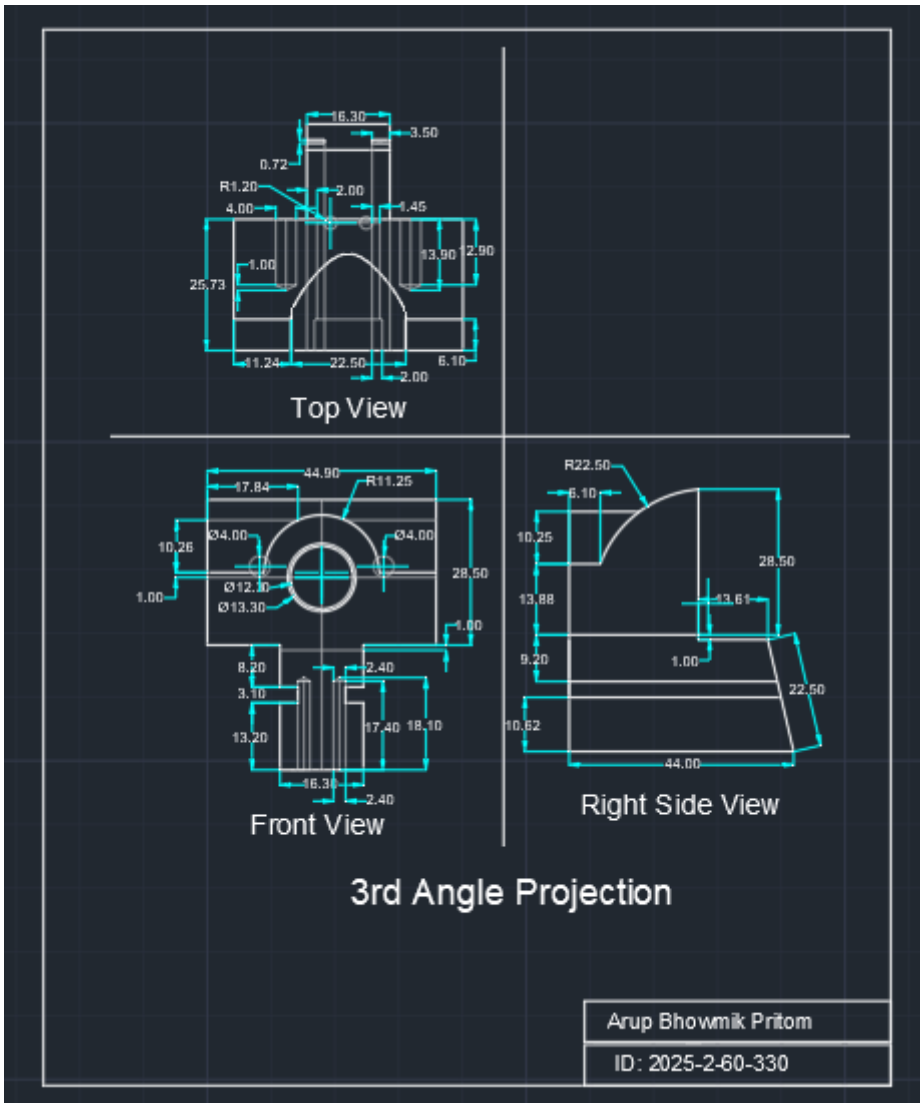

Isometric View :

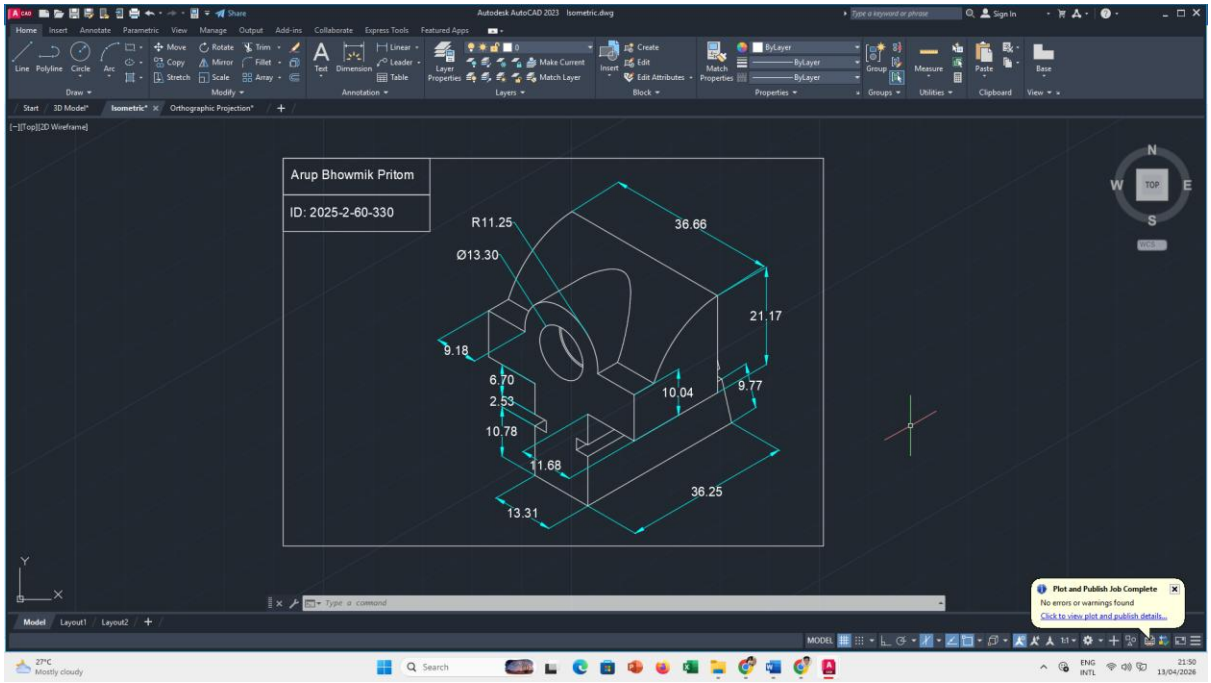

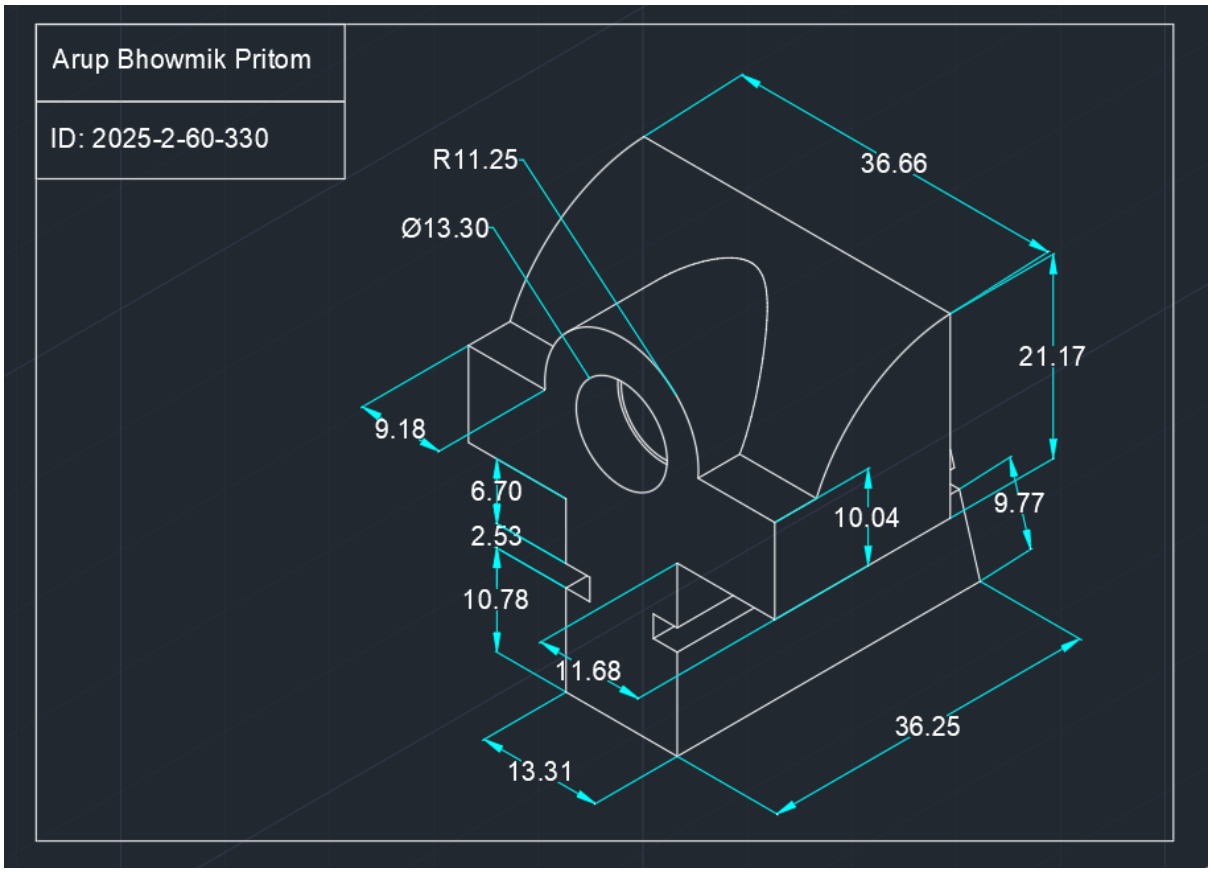

3D Model :

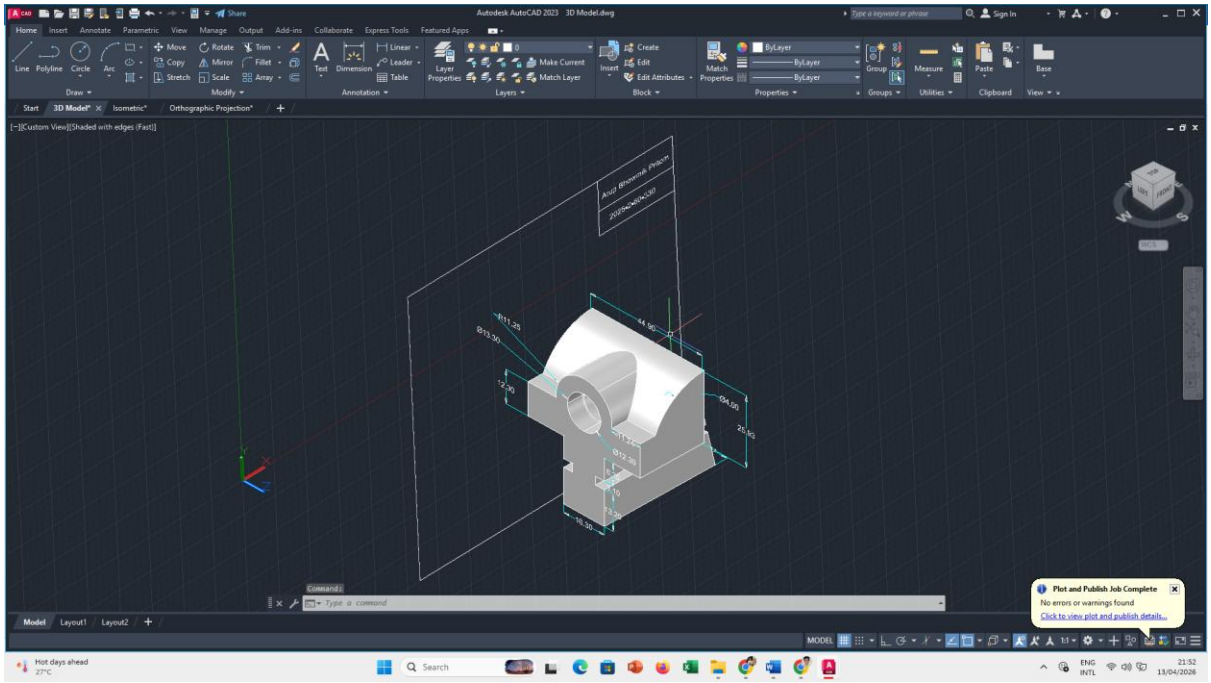
Autodesk AutoCAD 2023 - 3D Model.dwg
Arup Bhowmik Priom
2025*2*60*330
R11.25
Ø13.30
12.30
44.90
Ø4.00
25.93
Ø12.30
13.20
10.30
Plot and Publish Job Complete
No errors or warnings found
Click to view plot and publish details...

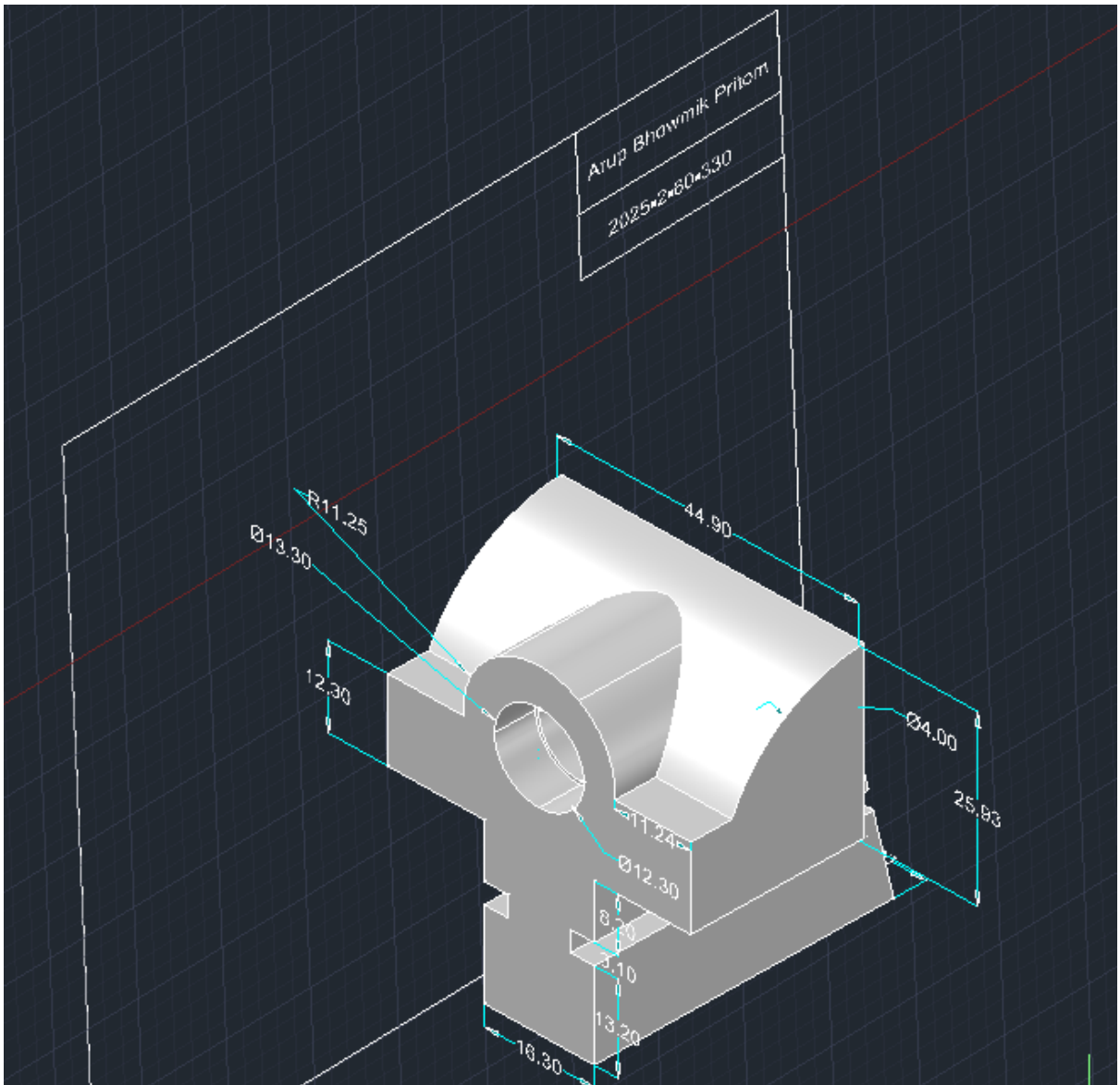
Arup Bhowmik Priom
2025*2*60*330
R11.25
Ø13.30
44.90
12.30
Ø4.00
25.93
Ø12.30
13.20
10.30

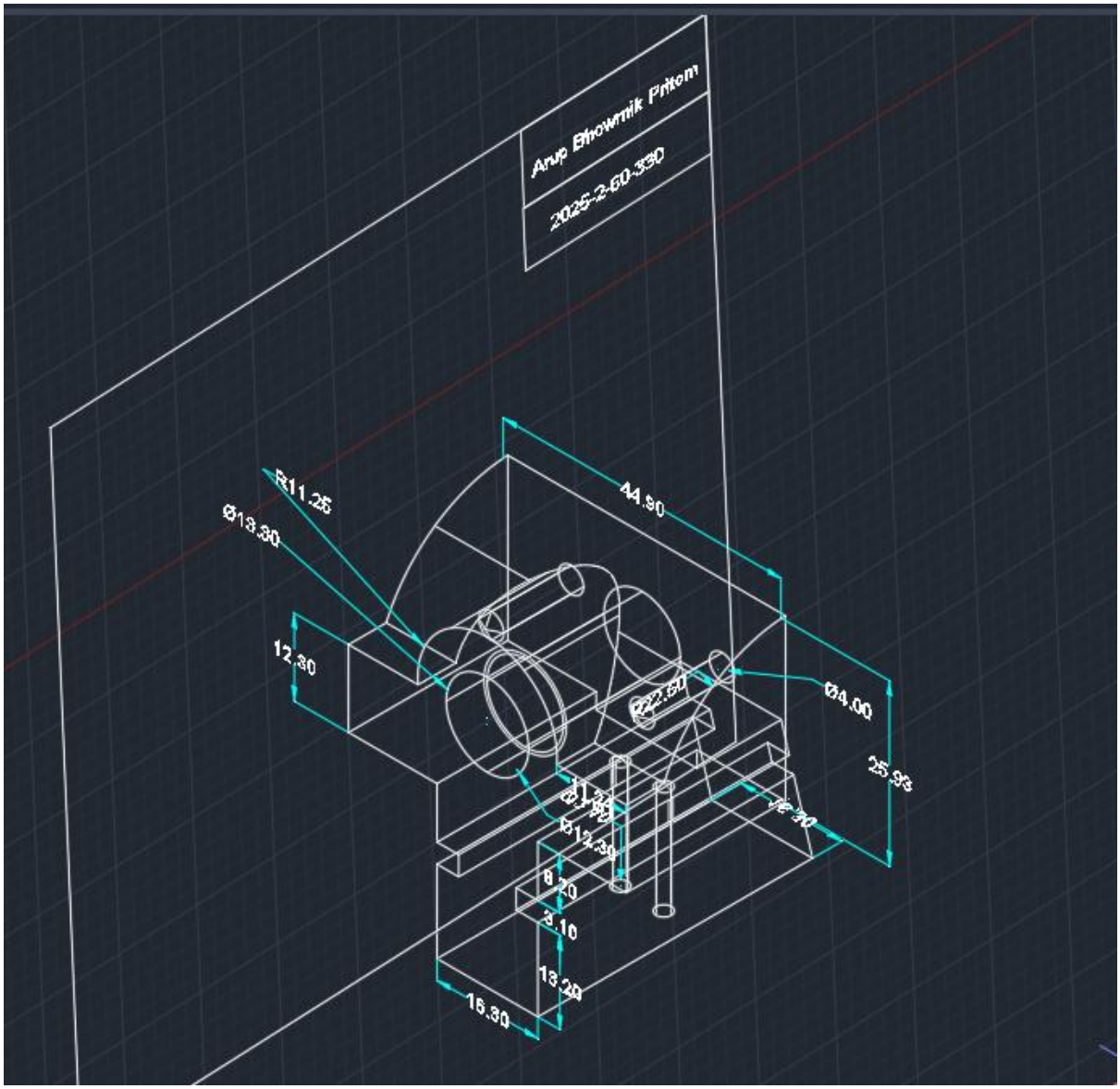

Thank You Sir