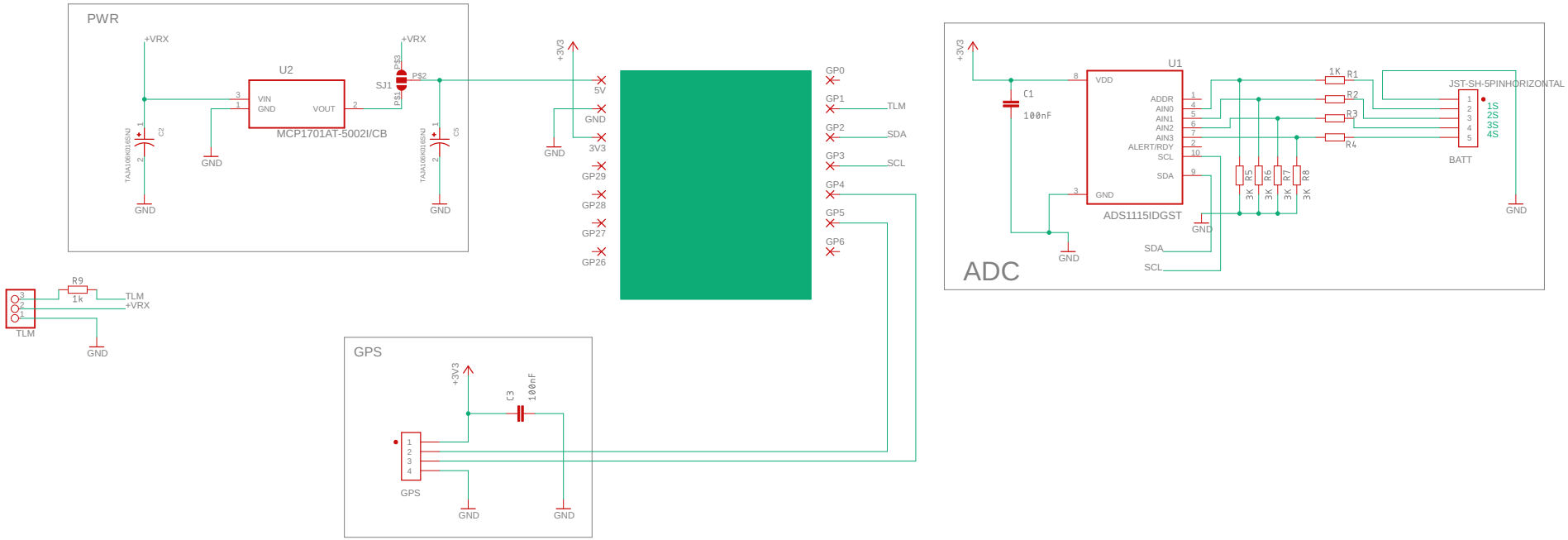
PWR
+VRX
U2
VIN
GND
VOUT
MCP1701AT-5002I/CB
SJ1
PS1
PS2
PS3
C2
C5
TAJA106K016RNJ
GND
+3V3
5V
3V3
GP29
GP28
GP27
GP26
GP0
GP1
GP2
GP3
GP4
GP5
GP6
TLM
SDA
SCL
ADC
U1
VDD
ADDR
AIN0
AIN1
AIN2
AIN3
ALERT/RDY
ADS1115IDGST
C1
100nF
R1
R2
R3
R4
1K
R5
R6
R7
R8
3K
JST-SH-5PINHORIZONTAL
BATT
1S
2S
3S
4S
R9
1k
GPS
C3
100nF