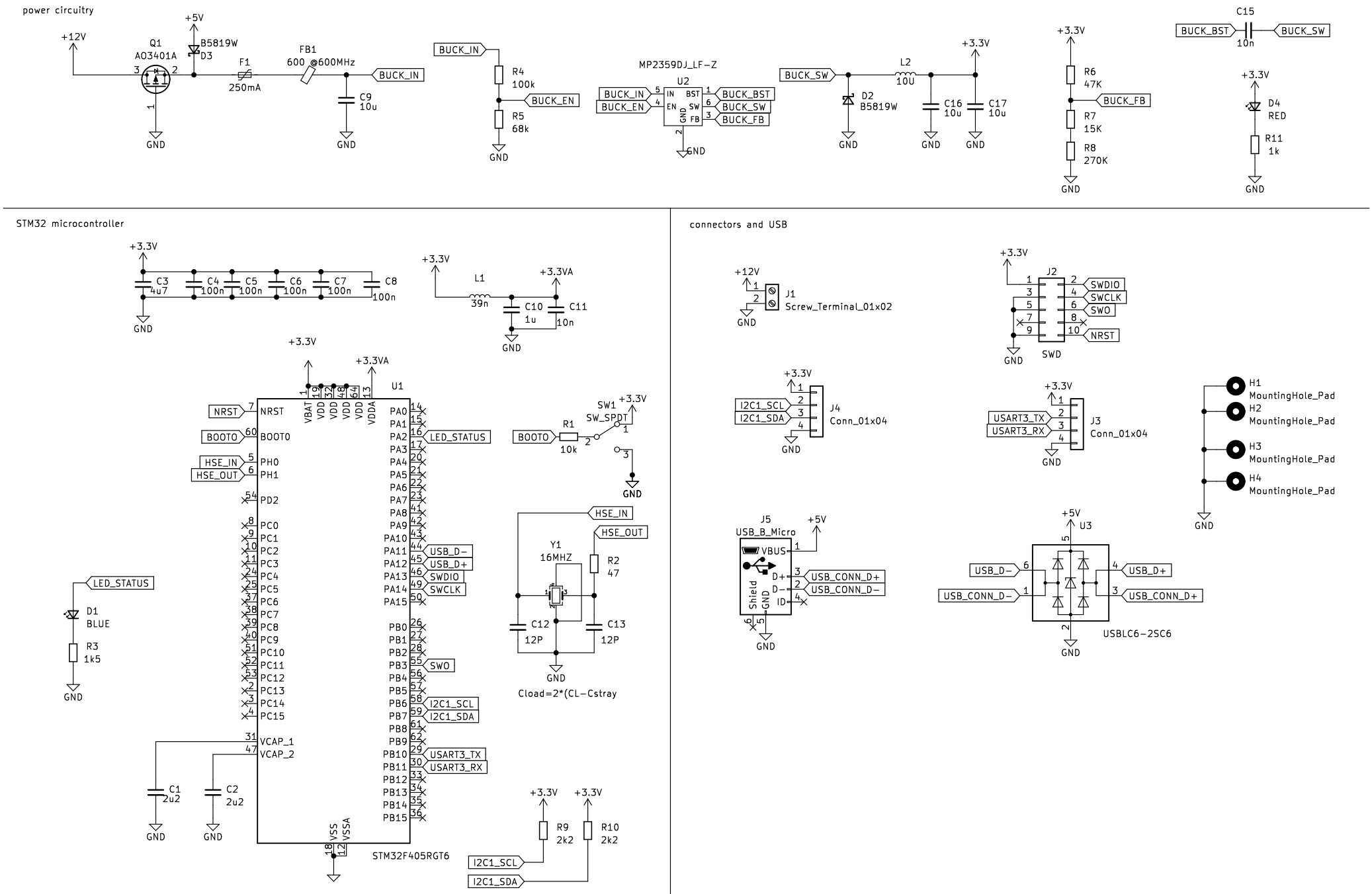
power circuitry
+12V
Q1
AO3401A
+5V
B5819W
D3
F1
250mA
FB1
600 @600MHz
BUCK_IN
C9
10u
GND
R4
100k
R5
68k
BUCK_EN
MP2359DJ_LF-Z
U2
IN
EN
BST
SW
GND
FB
BUCK_BST
BUCK_SW
BUCK_FB
L2
10U
D2
B5819W
C16
10u
C17
10u
+3.3V
R6
47K
R7
15K
R8
270K
C15
10n
D4
RED
R11
1k
STM32 microcontroller
C3
4u7
C4
100n
C5
100n
C6
100n
C7
100n
C8
100n
L1
39n
+3.3VA
C10
1u
C11
10n
U1
NRST
BOOT0
PH0
PH1
PD2
VBAT
VDD
VDDA
PA0
PA1
PA2
PA3
PA4
PA5
PA6
PA7
PA8
PA9
PA10
PA11
PA12
PA13
PA14
PA15
PB0
PB1
PB2
PB3
PB4
PB5
PB6
PB7
PB8
PB9
PB10
PB11
PB12
PB13
PB14
PB15
PC0
PC1
PC2
PC3
PC4
PC5
PC6
PC7
PC8
PC9
PC10
PC11
PC12
PC13
PC14
PC15
VCAP_1
VCAP_2
VSS
VSSA
LED_STATUS
USB_D-
USB_D+
SWDIO
SWCLK
SWO
I2C1_SCL
I2C1_SDA
USART3_TX
USART3_RX
STM32F405RGT6
R1
10k
SW1
SW_SPDT
HSE_IN
HSE_OUT
Y1
16MHZ
R2
47
C12
12P
C13
12P
Cload=2*(CL-Cstray
D1
BLUE
R3
1k5
C1
2u2
C2
2u2
R9
2k2
R10
2k2
connectors and USB
J1
Screw_Terminal_01x02
J2
SWD
J4
Conn_01x04
J3
Conn_01x04
H1
MountingHole_Pad
H2
MountingHole_Pad
H3
MountingHole_Pad
H4
MountingHole_Pad
J5
USB_B_Micro
VBUS
D+
D-
ID
Shield
USB_CONN_D+
USB_CONN_D-
U3
USBLC6-2SC6