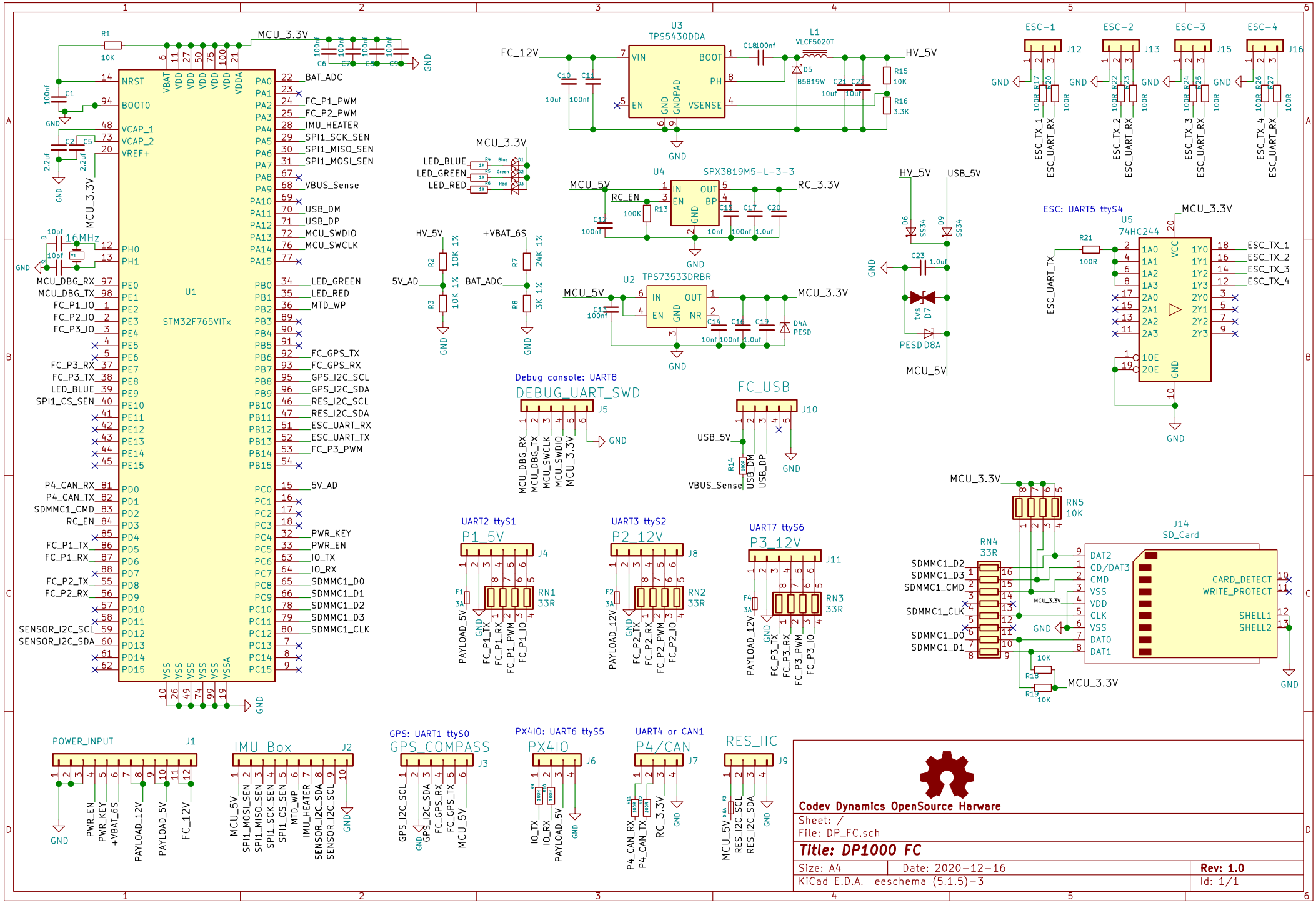
U1
STM32F765VITx
U2
TPS73533DRBR
U3
TPS5430DDA
U4
SPX3819M5-L-3-3
U5
74HC244
L1
VLCF5020T
16MHz
MCU_3.3V
HV_5V
USB_5V
MCU_5V
RC_3.3V
FC_12V
ESC-1
ESC-2
ESC-3
ESC-4
ESC: UART5 ttyS4
Debug console: UART8
DEBUG_UART_SWD
FC_USB
UART2 ttyS1
P1_5V
UART3 ttyS2
P2_12V
UART7 ttyS6
P3_12V
J14
SD_Card
POWER_INPUT
IMU Box
GPS: UART1 ttyS0
GPS_COMPASS
PX4IO: UART6 ttyS5
PX4IO
UART4 or CAN1
P4/CAN
RES_IIC
Codev Dynamics OpenSource Harware
Sheet: /
File: DP_FC.sch
Title: DP1000 FC
Size: A4
Date: 2020-12-16
Rev: 1.0
KiCad E.D.A. eeschema (5.1.5)-3
Id: 1/1