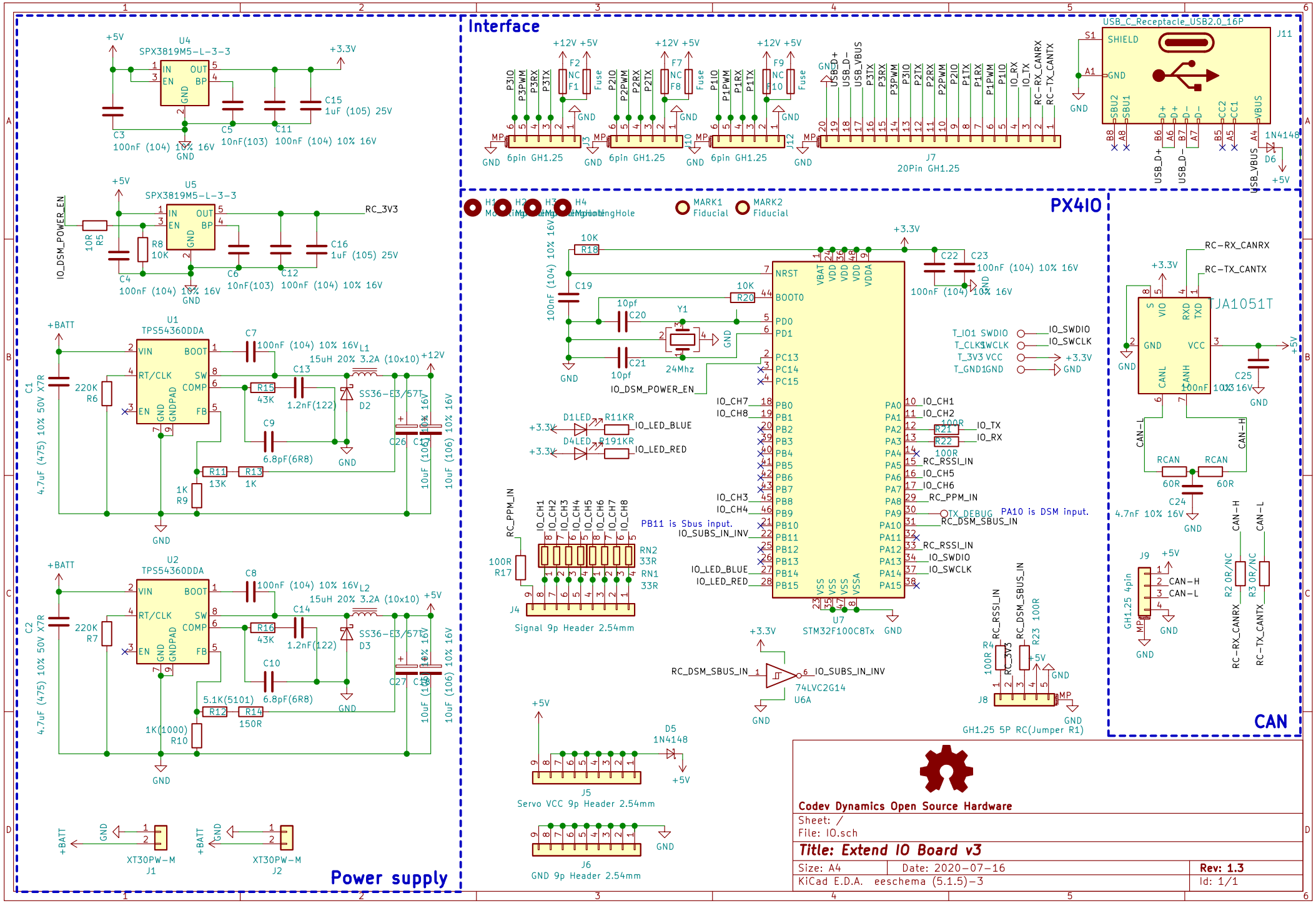
Interface
PX4IO
CAN
Power supply
U4 SPX3819M5-L-3-3
U5 SPX3819M5-L-3-3
U1 TPS54360DDA
U2 TPS54360DDA
U7 STM32F100C8Tx
TJA1051T
USB_C_Receptacle_USB2.0_16P J11
J7 20Pin GH1.25
J4 Signal 9p Header 2.54mm
J5 Servo VCC 9p Header 2.54mm
J6 GND 9p Header 2.54mm
J8 GH1.25 5P RC(Jumper R1)
J9 GH1.25 4pin
74LVC2G14 U6A
XT30PW-M J1
XT30PW-M J2
MARK1 Fiducial
MARK2 Fiducial
PB11 is Sbus input.
PA10 is DSM input.
Codev Dynamics Open Source Hardware
Sheet: /
File: IO.sch
Title: Extend IO Board v3
Size: A4
Date: 2020-07-16
Rev: 1.3
KiCad E.D.A. eeschema (5.1.5)-3
Id: 1/1