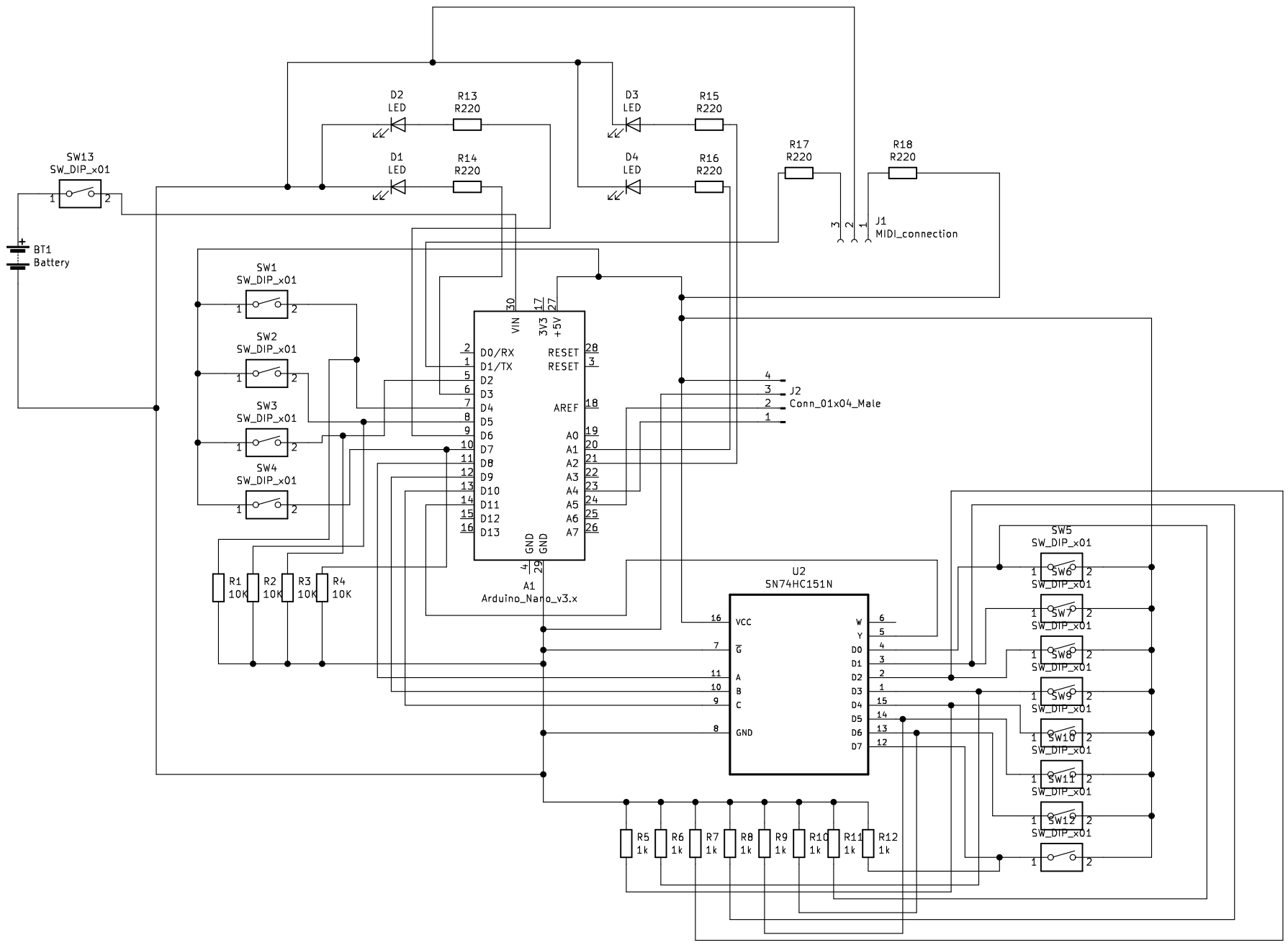

Designed_by_"Chi_ha_ucciso_il_conte?_aka_Nicolo_Merendino

Sheet: /
File: PCB_output_arduino.sch

Title:

Size: A3	Date:	**Rev:**
KiCad E.D.A. eeschema 5.0.2-bee76a070ubuntu18.04.1		Id: 1/1