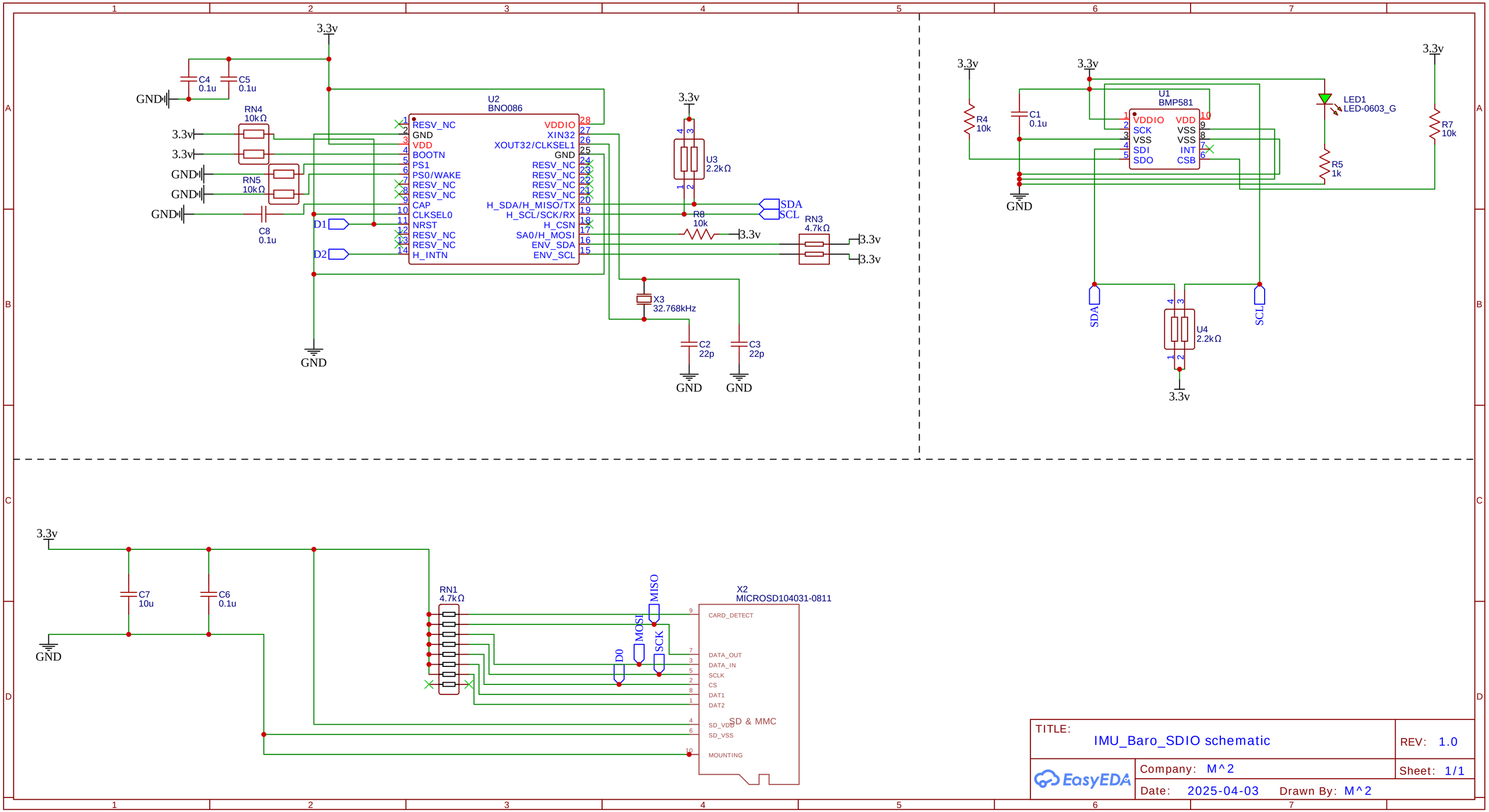

TITLE: IMU_Baro_SDIO schematic	REV: 1.0
EasyEDA	Company: M^2
	Sheet: 1/1
	Date: 2025-04-03 Drawn By: M^2