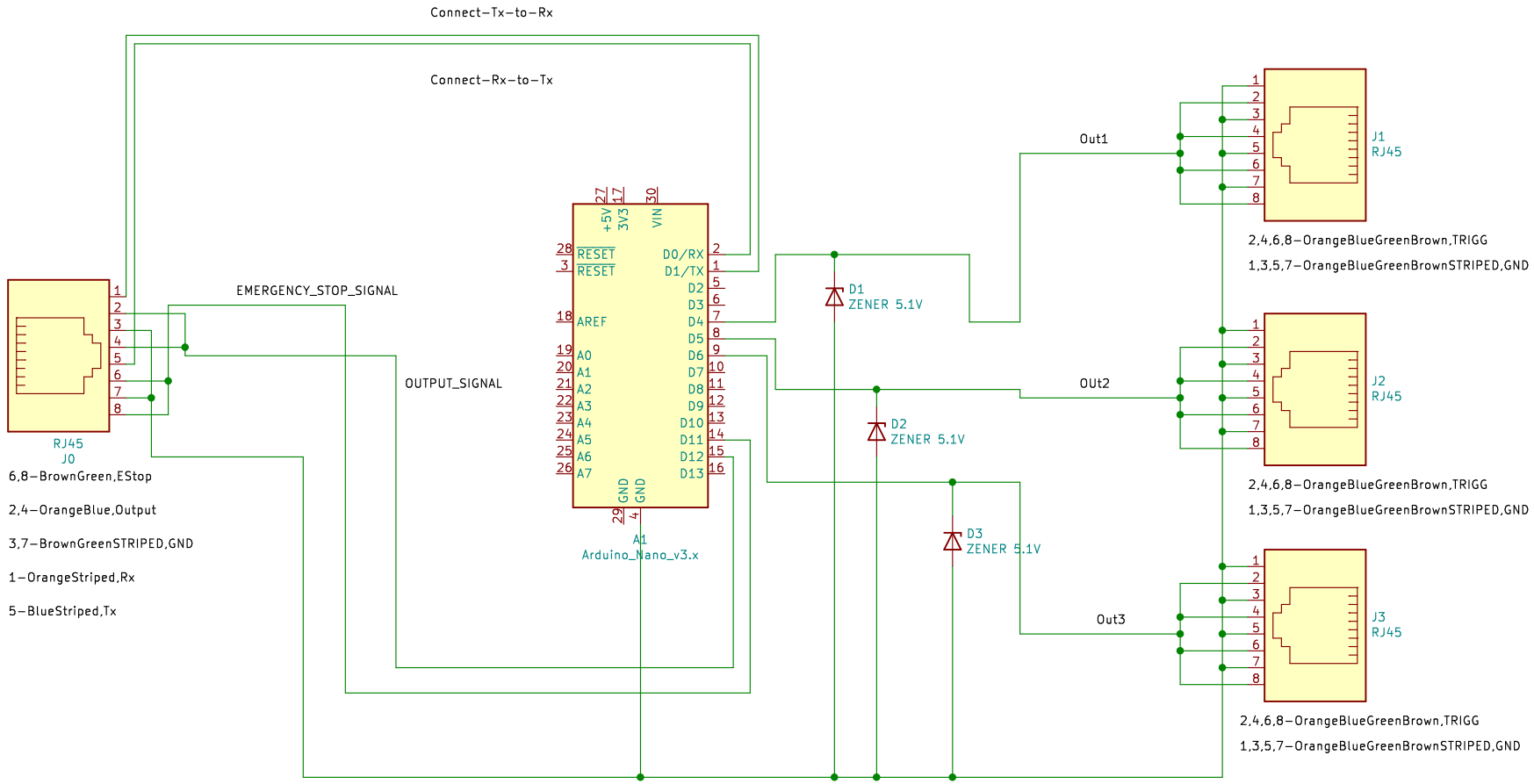

SYNCHRONOUS X-RAY DIAGNOSTICS TRIGGER SYSTEM SCHEMATIC

CODRUTZA DRAGU, UNIVERSITY OF OXFORD, SUMMER STUDENT 2021

Sheet: /		
File: MidBox.sch		
Title: MIDBOX_SCHEMATIC		
Size: A4	Date: 17/09/2021	Rev:
KiCad E.D.A. kicad (5.1.10)-1		Id: 1/1