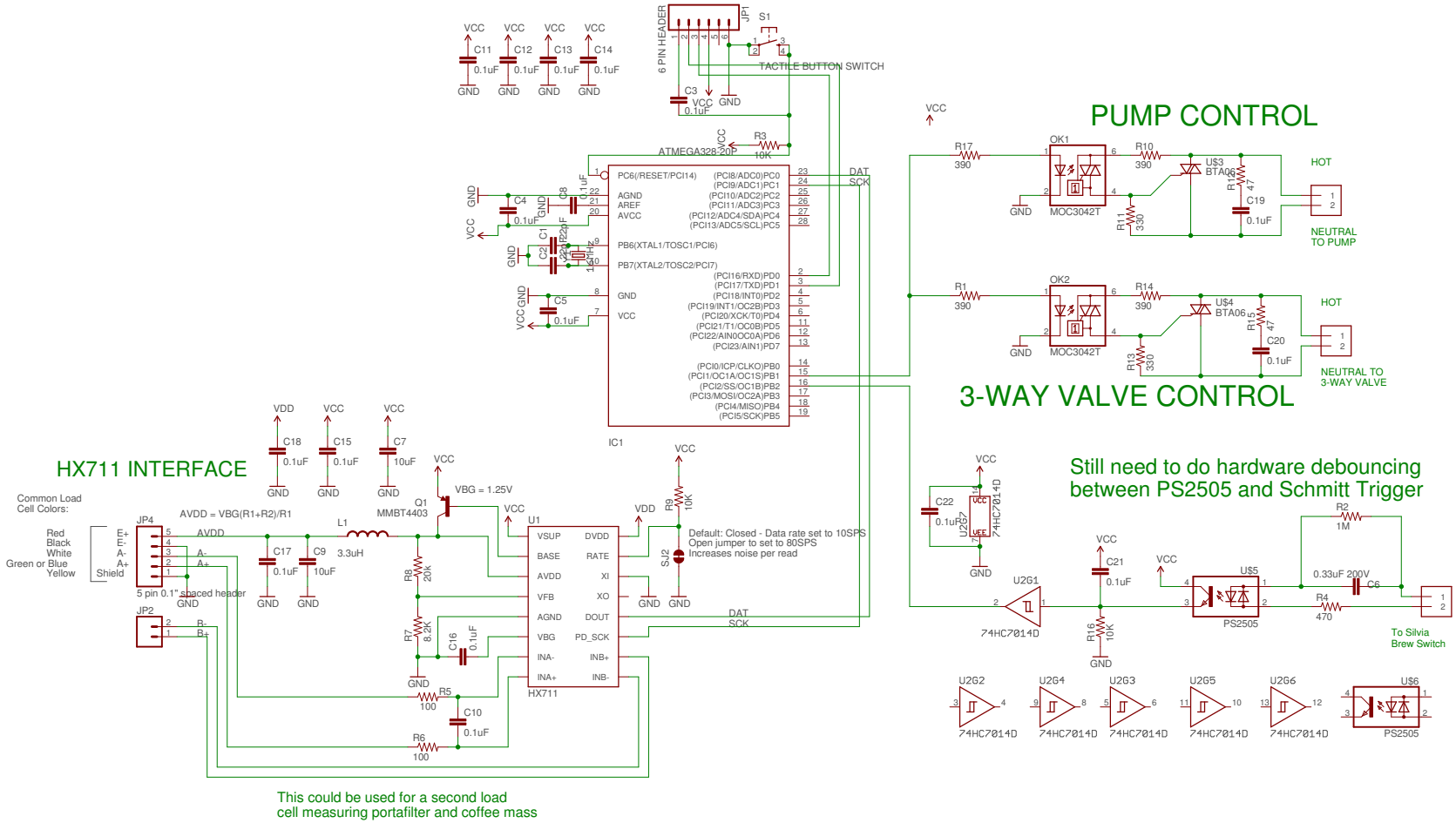
PUMP CONTROL
3-WAY VALVE CONTROL
HX711 INTERFACE
Still need to do hardware debouncing between PS2505 and Schmitt Trigger
TACTILE BUTTON SWITCH
6 PIN HEADER
ATMEGA328-20P
IC1
HX711
U1
JP1
JP2
JP4
OK1
OK2
MOC3042T
U$3 BTA06
U$4 BTA06
HOT
NEUTRAL TO PUMP
NEUTRAL TO 3-WAY VALVE
To Silvia Brew Switch
PS2505
74HC7014D
Q1 MMBT4403
VBG = 1.25V
AVDD = VBG(R1+R2)/R1
Common Load Cell Colors:
Red E+
Black E-
White A-
Green or Blue A+
Yellow Shield
5 pin 0.1" spaced header
Default: Closed - Data rate set to 10SPS
Open jumper to set to 80SPS
Increases noise per read
DAT
SCK
This could be used for a second load cell measuring portafilter and coffee mass