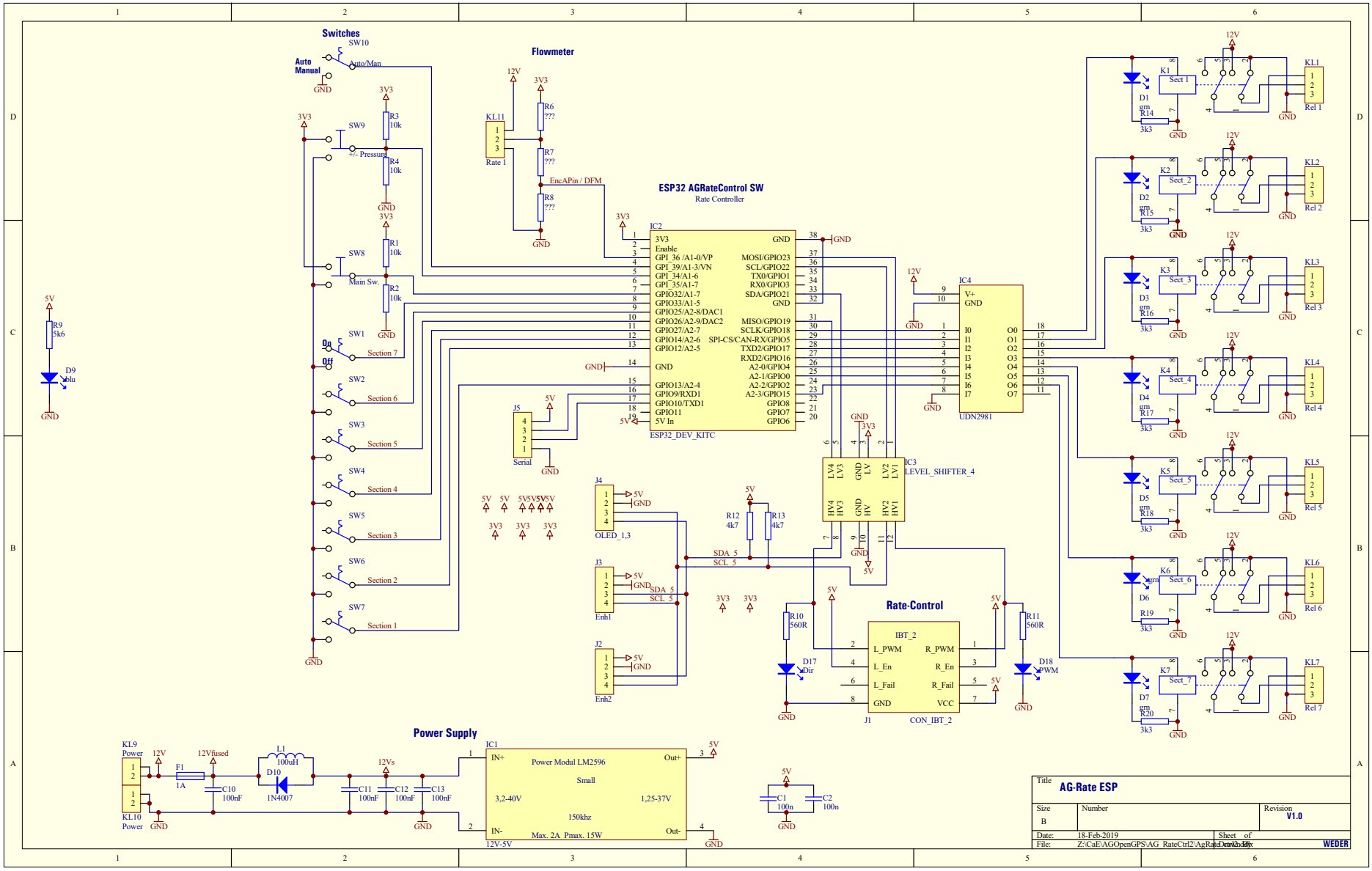
Switches
Auto Manual
SW10
Auto/Man
SW9
+/- Pressure
SW8
Main Sw.
SW1
On
Off
Section 7
SW2
Section 6
SW3
Section 5
SW4
Section 4
SW5
Section 3
SW6
Section 2
SW7
Section 1
Flowmeter
KL11
Rate 1
EncAPin / DFM
ESP32 AGRateControl SW
Rate Controller
IC2
ESP32_DEV_KITC
IC4
UDN2981
IC3
LEVEL_SHIFTER_4
J5
Serial
J4
OLED_1,3
J3
Enh1
J2
Enh2
SDA_5
SCL_5
Rate-Control
IBT_2
J1
CON_IBT_2
D17
Dir
D18
PWM
Power Supply
KL9
Power
KL10
Power
F1
1A
C10
100nF
L1
100uH
D10
1N4007
C11
100nF
C12
100nF
C13
100nF
IC1
Power Modul LM2596
Small
3,2-40V
1,25-37V
150khz
Max. 2A Pmax. 15W
12V-5V
C1
100n
C2
100n
KL1
KL2
KL3
KL4
KL5
KL6
KL7
Rel 1
Rel 2
Rel 3
Rel 4
Rel 5
Rel 6
Rel 7
Sect 1
Sect_2
Sect_3
Sect_4
Sect_5
Sect_6
Sect_7
D9
blu
Title
AG-Rate ESP
Size
B
Number
Revision
V1.0
Date: 18-Feb-2019
Sheet of
File: Z:\CaE\AGOpenGPS\AG RateCtrl2\AgRateCtrl2.Schdoc
Drawn by:
WEDER