Board-to-Board
File: board-to-board.kicad_sch

IO1
File: io1.kicad_sch

IO2
File: io2.kicad_sch

MR-MCXN-T1 IO

DESIGNER: YOURI TILS
CTO SYSTEM INNOVATIONS / MOBILE ROBOTICS DOMAIN
NXP SEMICONDUCTORS B.V.

Sheet: /
File: spinali_mcxn_t1_io.kicad_sch

Title: MR-MCXN-T1-IO

Size: A4
Date: 2025-10-13
Rev: X0
KiCad E.D.A. 9.0.4
Id: 1/4

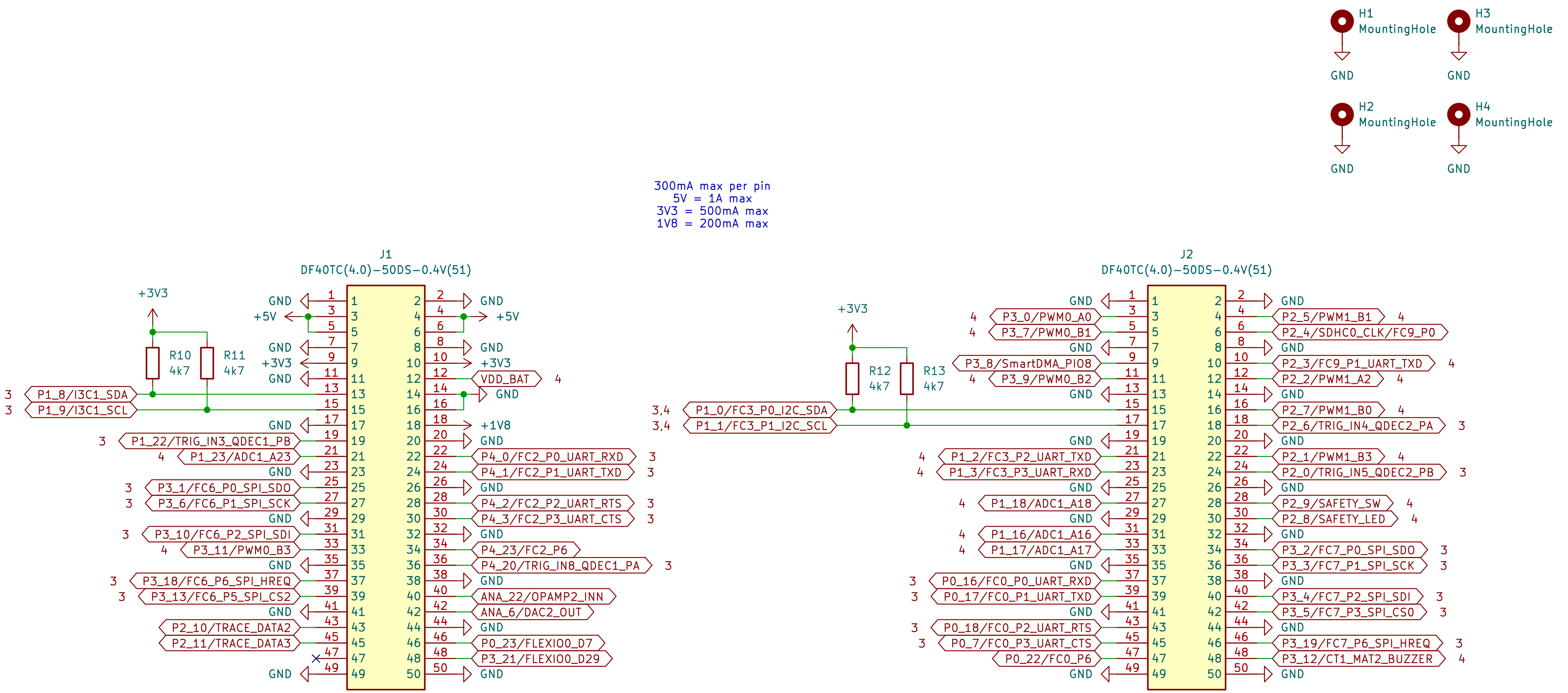
H1
MountingHole
GND
H3
MountingHole
GND
H2
MountingHole
GND
H4
MountingHole
GND
J1
DF40TC(4.0)-50DS-0.4V(51)
+3V3
R10
4k7
R11
4k7
3 P1_8/I3C1_SDA
3 P1_9/I3C1_SCL
3 P1_22/TRIG_IN3_QDEC1_PB
4 P1_23/ADC1_A23
3 P3_1/FC6_P0_SPI_SDO
3 P3_6/FC6_P1_SPI_SCK
3 P3_10/FC6_P2_SPI_SDI
4 P3_11/PWM0_B3
3 P3_18/FC6_P6_SPI_HREQ
3 P3_13/FC6_P5_SPI_CS2
P2_10/TRACE_DATA2
P2_11/TRACE_DATA3
GND
+5V
GND
+3V3
GND
GND
GND
GND
GND
GND
GND
GND
GND
GND
+5V
GND
+3V3
VDD_BAT 4
GND
+1V8
GND
P4_0/FC2_P0_UART_RXD 3
P4_1/FC2_P1_UART_TXD 3
GND
P4_2/FC2_P2_UART_RTS 3
P4_3/FC2_P3_UART_CTS 3
GND
P4_23/FC2_P6
P4_20/TRIG_IN8_QDEC1_PA 3
GND
ANA_22/OPAMP2_INN
ANA_6/DAC2_OUT
GND
P0_23/FLEXIO0_D7
P3_21/FLEXIO0_D29
GND
J2
DF40TC(4.0)-50DS-0.4V(51)
+3V3
R12
4k7
R13
4k7
3,4 P1_0/FC3_P0_I2C_SDA
3,4 P1_1/FC3_P1_I2C_SCL
GND
4 P3_0/PWM0_A0
4 P3_7/PWM0_B1
GND
P3_8/SmartDMA_PIO8
4 P3_9/PWM0_B2
GND
GND
4 P1_2/FC3_P2_UART_TXD
4 P1_3/FC3_P3_UART_RXD
GND
4 P1_18/ADC1_A18
GND
4 P1_16/ADC1_A16
4 P1_17/ADC1_A17
GND
3 P0_16/FC0_P0_UART_RXD
3 P0_17/FC0_P1_UART_TXD
GND
3 P0_18/FC0_P2_UART_RTS
3 P0_7/FC0_P3_UART_CTS
P0_22/FC0_P6
GND
GND
P2_5/PWM1_B1 4
P2_4/SDHC0_CLK/FC9_P0
GND
P2_3/FC9_P1_UART_TXD 4
P2_2/PWM1_A2 4
GND
P2_7/PWM1_B0 4
P2_6/TRIG_IN4_QDEC2_PA 3
GND
P2_1/PWM1_B3 4
P2_0/TRIG_IN5_QDEC2_PB 3
GND
P2_9/SAFETY_SW 4
P2_8/SAFETY_LED 4
GND
P3_2/FC7_P0_SPI_SDO 3
P3_3/FC7_P1_SPI_SCK 3
GND
P3_4/FC7_P2_SPI_SDI 3
P3_5/FC7_P3_SPI_CS0 3
GND
P3_19/FC7_P6_SPI_HREQ 3
P3_12/CT1_MAT2_BUZZER 4
GND
1 2 3 4 5 6 7 8 9 10 11 12 13 14 15 16 17 18 19 20 21 22 23 24 25 26 27 28 29 30 31 32 33 34 35 36 37 38 39 40 41 42 43 44 45 46 47 48 49 50

300mA max per pin
5V = 1A max
3V3 = 500mA max
1V8 = 200mA max

DESIGNER: YOURI TILS
CTO SYSTEM INNOVATIONS / MOBILE ROBOTICS DOMAIN
NXP SEMICONDUCTORS B.V.

Sheet: /Board-to-Board/
File: board-to-board.kicad_sch

Title: MR-MCXN-T1-IO

Size: A4
Date: 2025-10-13
Rev: X0
KiCad E.D.A. 9.0.4
Id: 2/4

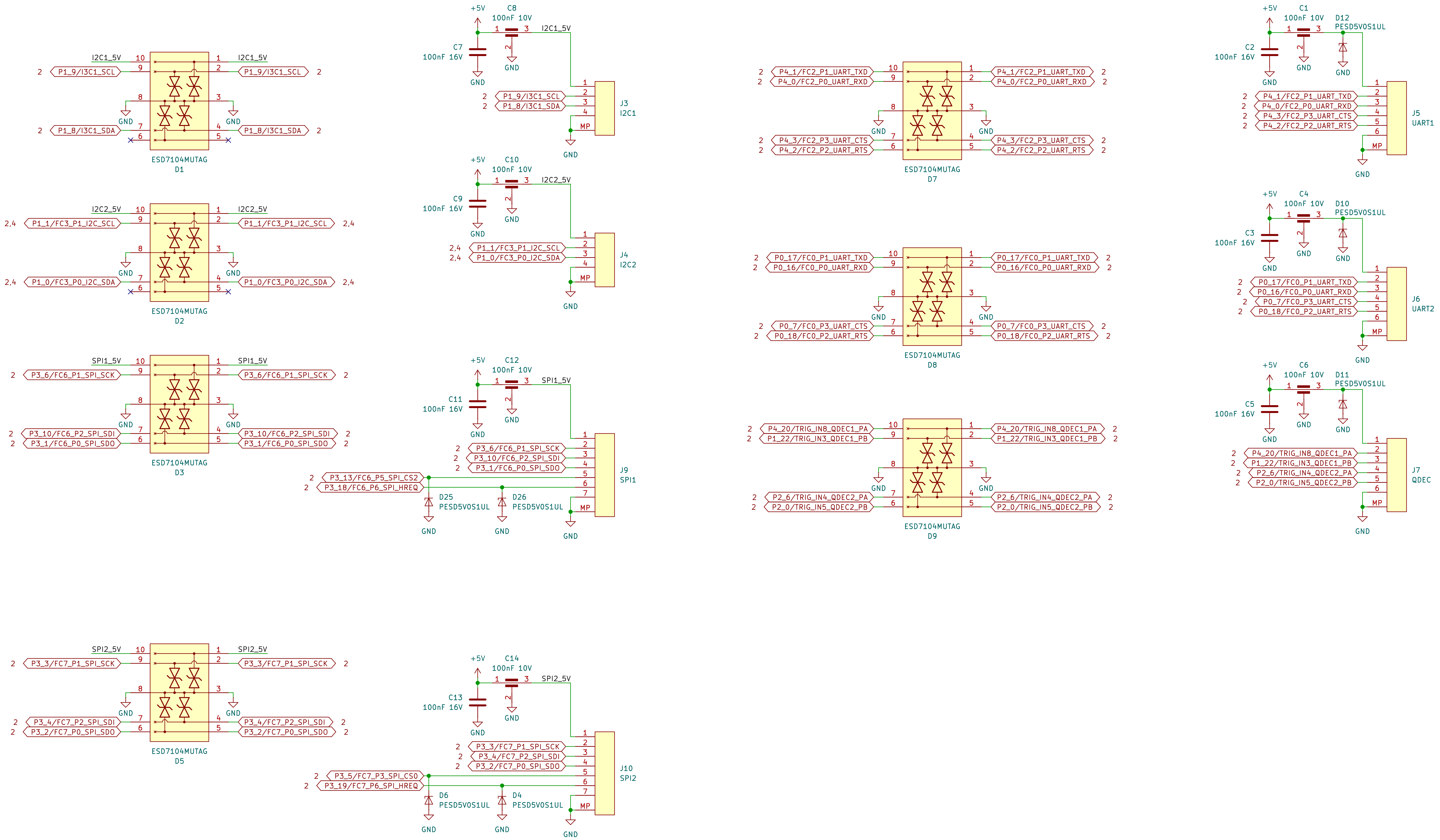
ESD7104MUTAG
D1
I2C1_5V
P1_9/I3C1_SCL
P1_8/I3C1_SDA
ESD7104MUTAG
D2
I2C2_5V
P1_1/FC3_P1_I2C_SCL
P1_0/FC3_P0_I2C_SDA
ESD7104MUTAG
D3
SPI1_5V
P3_6/FC6_P1_SPI_SCK
P3_10/FC6_P2_SPI_SDI
P3_1/FC6_P0_SPI_SDO
ESD7104MUTAG
D5
SPI2_5V
P3_3/FC7_P1_SPI_SCK
P3_4/FC7_P2_SPI_SDI
P3_2/FC7_P0_SPI_SDO
+5V
GND
C7 100nF 16V
C8 100nF 10V
J3
I2C1
C9 100nF 16V
C10 100nF 10V
J4
I2C2
C11 100nF 16V
C12 100nF 10V
J9
SPI1
P3_13/FC6_P5_SPI_CS2
P3_18/FC6_P6_SPI_HREQ
D25 PESD5V0S1UL
D26 PESD5V0S1UL
C13 100nF 16V
C14 100nF 10V
J10
SPI2
P3_5/FC7_P3_SPI_CS0
P3_19/FC7_P6_SPI_HREQ
D6 PESD5V0S1UL
D4 PESD5V0S1UL
ESD7104MUTAG
D7
P4_1/FC2_P1_UART_TXD
P4_0/FC2_P0_UART_RXD
P4_3/FC2_P3_UART_CTS
P4_2/FC2_P2_UART_RTS
ESD7104MUTAG
D8
P0_17/FC0_P1_UART_TXD
P0_16/FC0_P0_UART_RXD
P0_7/FC0_P3_UART_CTS
P0_18/FC0_P2_UART_RTS
ESD7104MUTAG
D9
P4_20/TRIG_IN8_QDEC1_PA
P1_22/TRIG_IN3_QDEC1_PB
P2_6/TRIG_IN4_QDEC2_PA
P2_0/TRIG_IN5_QDEC2_PB
C1 100nF 10V
C2 100nF 16V
D12 PESD5V0S1UL
J5
UART1
C3 100nF 16V
C4 100nF 10V
D10 PESD5V0S1UL
J6
UART2
C5 100nF 16V
C6 100nF 10V
D11 PESD5V0S1UL
J7
QDEC
MP

DESIGNER: YOURI TILS
CTO SYSTEM INNOVATIONS / MOBILE ROBOTICS DOMAIN
NXP SEMICONDUCTORS B.V.

Sheet: /IO1/
File: io1.kicad_sch

Title: MR-MCXN-T1-IO

Size: A3 | Date: 2025-10-13 | **Rev: X0**
KiCad E.D.A. 9.0.4 | Id: 3/4

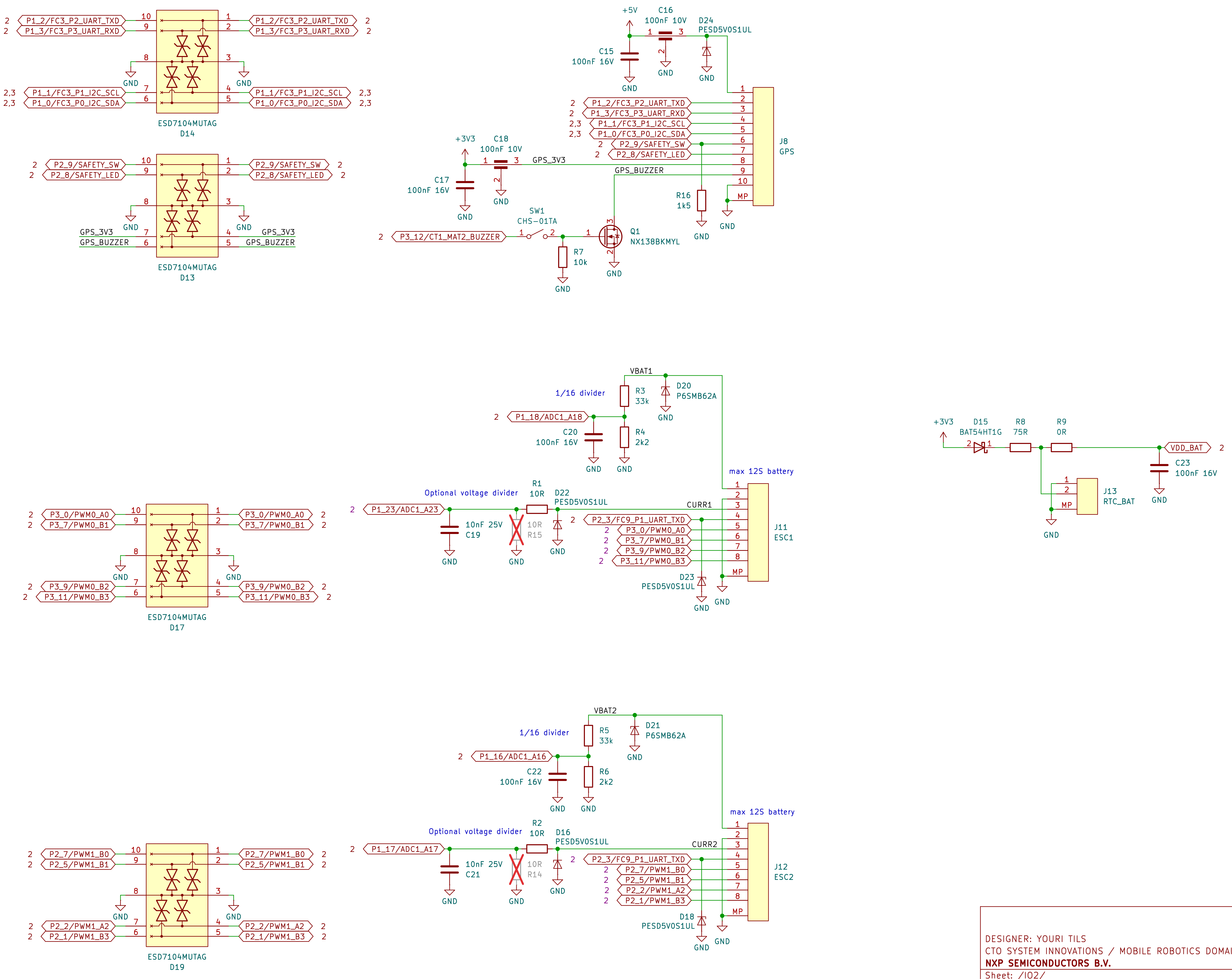
P1_2/FC3_P2_UART_TXD
P1_3/FC3_P3_UART_RXD
P1_1/FC3_P1_I2C_SCL
P1_0/FC3_P0_I2C_SDA
ESD7104MUTAG
D14
P2_9/SAFETY_SW
P2_8/SAFETY_LED
GPS_3V3
GPS_BUZZER
ESD7104MUTAG
D13
+5V
C16
100nF 10V
D24
PESD5V0S1UL
C15
100nF 16V
GND
J8
GPS
MP
+3V3
C18
100nF 10V
C17
100nF 16V
R16
1k5
SW1
CHS-01TA
P3_12/CT1_MAT2_BUZZER
Q1
NX138BKMYL
R7
10k
VBAT1
1/16 divider
R3
33k
D20
P6SMB62A
P1_18/ADC1_A18
C20
100nF 16V
R4
2k2
max 12S battery
Optional voltage divider
R1
10R
D22
PESD5V0S1UL
P1_23/ADC1_A23
10nF 25V
C19
10R
R15
CURR1
P2_3/FC9_P1_UART_TXD
P3_0/PWM0_A0
P3_7/PWM0_B1
P3_9/PWM0_B2
P3_11/PWM0_B3
J11
ESC1
D23
PESD5V0S1UL
ESD7104MUTAG
D17
+3V3
D15
BAT54HT1G
R8
75R
R9
0R
VDD_BAT
C23
100nF 16V
J13
RTC_BAT
VBAT2
1/16 divider
R5
33k
D21
P6SMB62A
P1_16/ADC1_A16
C22
100nF 16V
R6
2k2
max 12S battery
Optional voltage divider
R2
10R
D16
PESD5V0S1UL
P1_17/ADC1_A17
10nF 25V
C21
10R
R14
CURR2
P2_7/PWM1_B0
P2_5/PWM1_B1
P2_2/PWM1_A2
P2_1/PWM1_B3
J12
ESC2
D18
PESD5V0S1UL
ESD7104MUTAG
D19

DESIGNER: YOURI TILS
CTO SYSTEM INNOVATIONS / MOBILE ROBOTICS DOMAIN
NXP SEMICONDUCTORS B.V.
Sheet: /IO2/
File: io2.kicad_sch
Title: MR-MCXN-T1-IO
Size: A3 Date: 2025-10-13 **Rev: X0**
KiCad E.D.A. 9.0.4 Id: 4/4