Board-to-Board

File: board-to-board.kicad_sch

Sensors

File: sensors.kicad_sch

GNSS

File: gnss.kicad_sch

MR-MCXN-T1-F9P

CLASSIFICATION: Public

DESIGNER: Youri Tils / Benjamin Perseghetti/ Iain Galloway
CTO SYSTEM INNOVATIONS / MOBILE ROBOTICS DOMAIN
NXP SEMICONDUCTORS B.V.

Sheet: /
File: spinali_add-on_GNSS_F9P.kicad_sch

Title: MR-MCXN-T1-F9P

Size: A4	Date: 2025-06-02	**Rev: X0**
KiCad E.D.A. 9.0.0-rc3		Id: 1/4

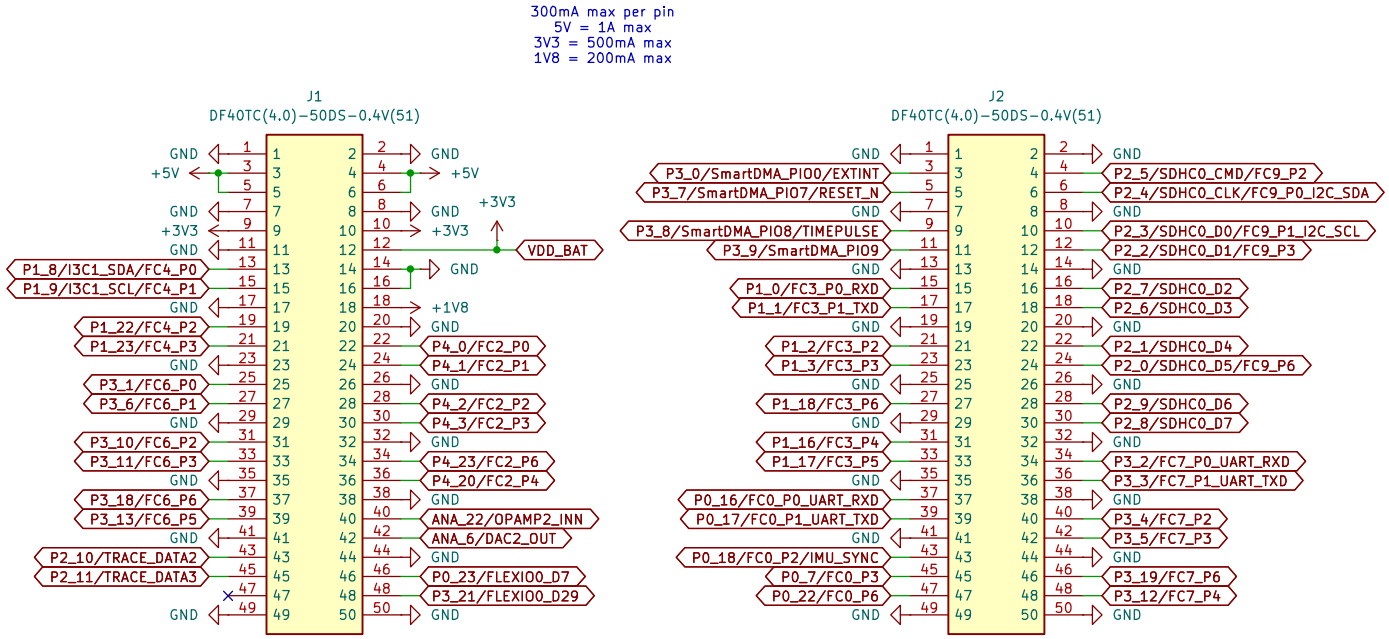

CLASSIFICATION: Public

DESIGNER: Youri Tils / Benjamin Perseghetti/ Iain Galloway
CTO SYSTEM INNOVATIONS / MOBILE ROBOTICS DOMAIN
NXP SEMICONDUCTORS B.V.

Sheet: /Board-to-Board/
File: board-to-board.kicad_sch

Title: MR-MCXN-T1-F9P

Size: A4	Date: 2025-06-02	**Rev: X0**
KiCad E.D.A. 9.0.0-rc3		Id: 2/4

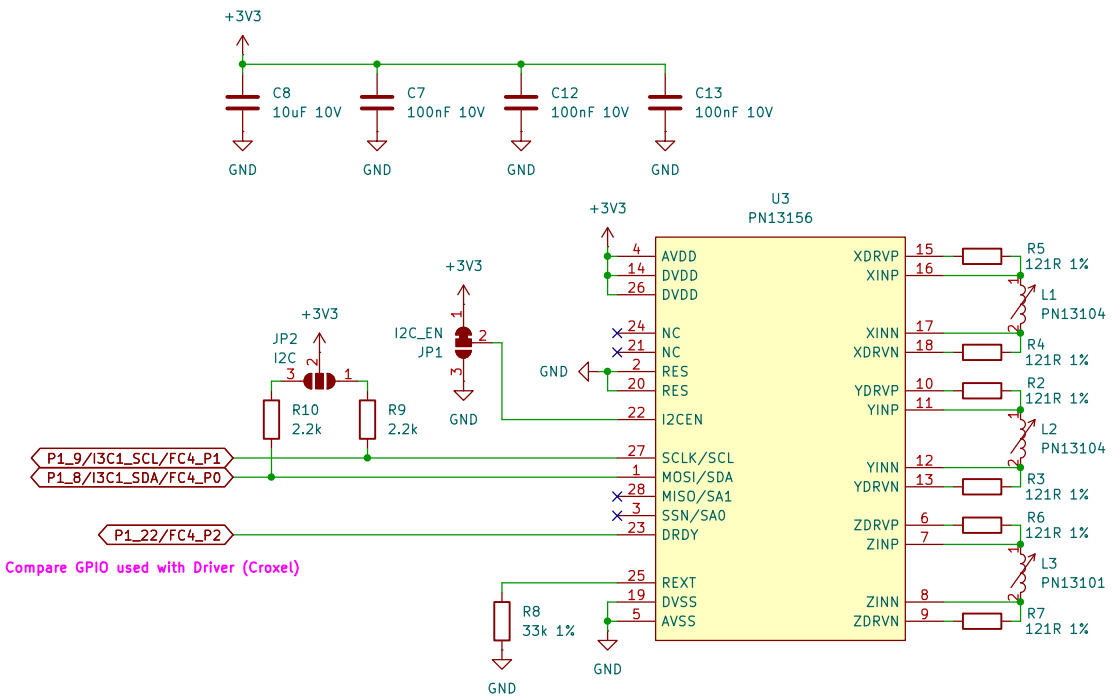

CLASSIFICATION: Public

DESIGNER: Youri Tils / Benjamin Perseghetti/ Iain Galloway
CTO SYSTEM INNOVATIONS / MOBILE ROBOTICS DOMAIN
NXP SEMICONDUCTORS B.V.

Sheet: /Sensors/
File: sensors.kicad_sch

Title: MR-MCXN-T1-F9P

Size: A4	Date: 2025-06-02	**Rev: X0**
KiCad E.D.A. 9.0.0-rc3		Id: 3/4

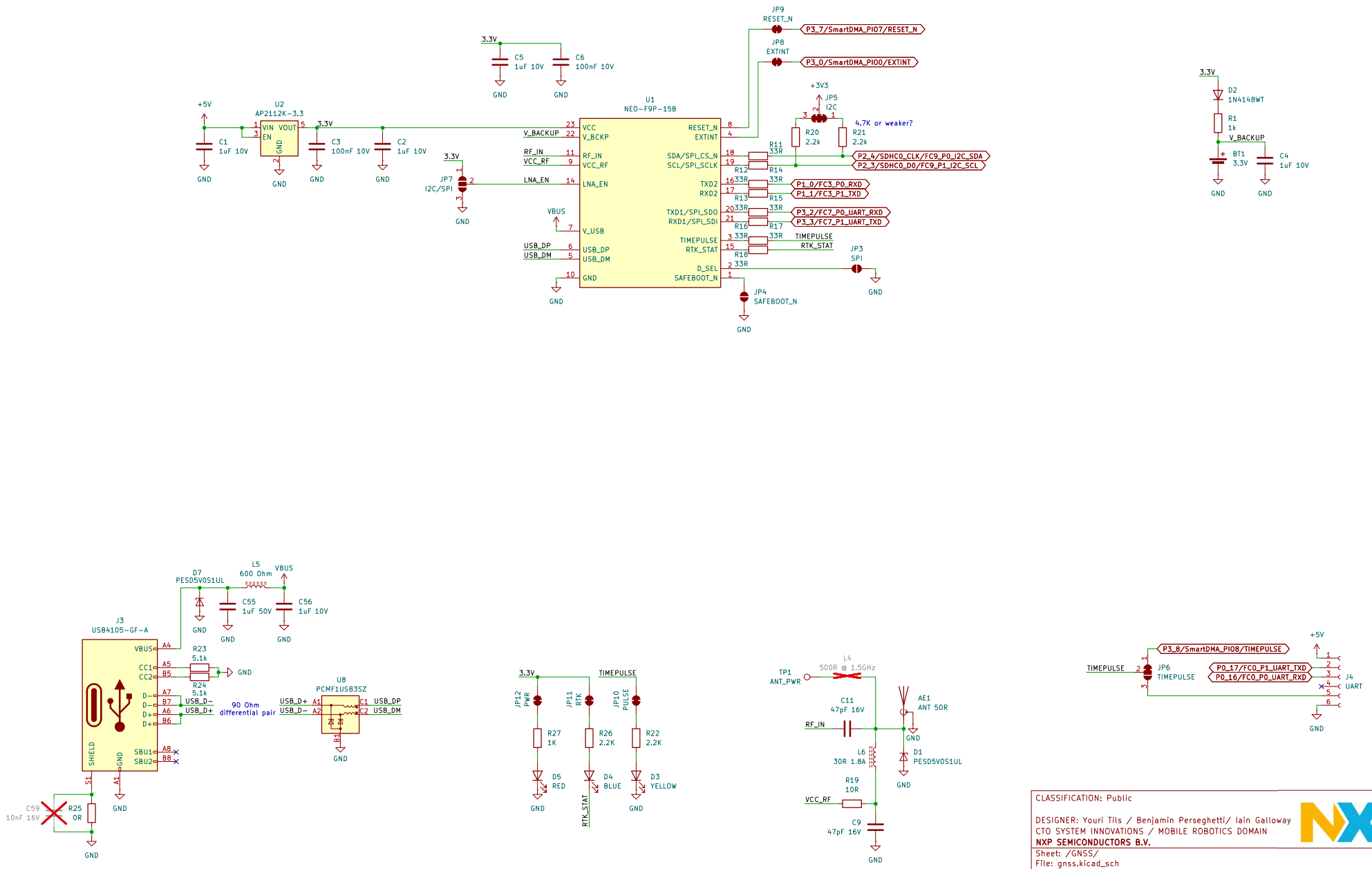

CLASSIFICATION: Public

DESIGNER: Youri Tils / Benjamin Perseghetti/ Iain Galloway
CTO SYSTEM INNOVATIONS / MOBILE ROBOTICS DOMAIN
NXP SEMICONDUCTORS B.V.

Sheet: /GNSS/
File: gnss.kicad_sch

Title: MR-MCXN-T1-F9P

Size: A3	Date: 2025-06-02	Rev: X0
KiCad E.D.A. 9.0.0-rc3		Id: 4/4