Schematic:

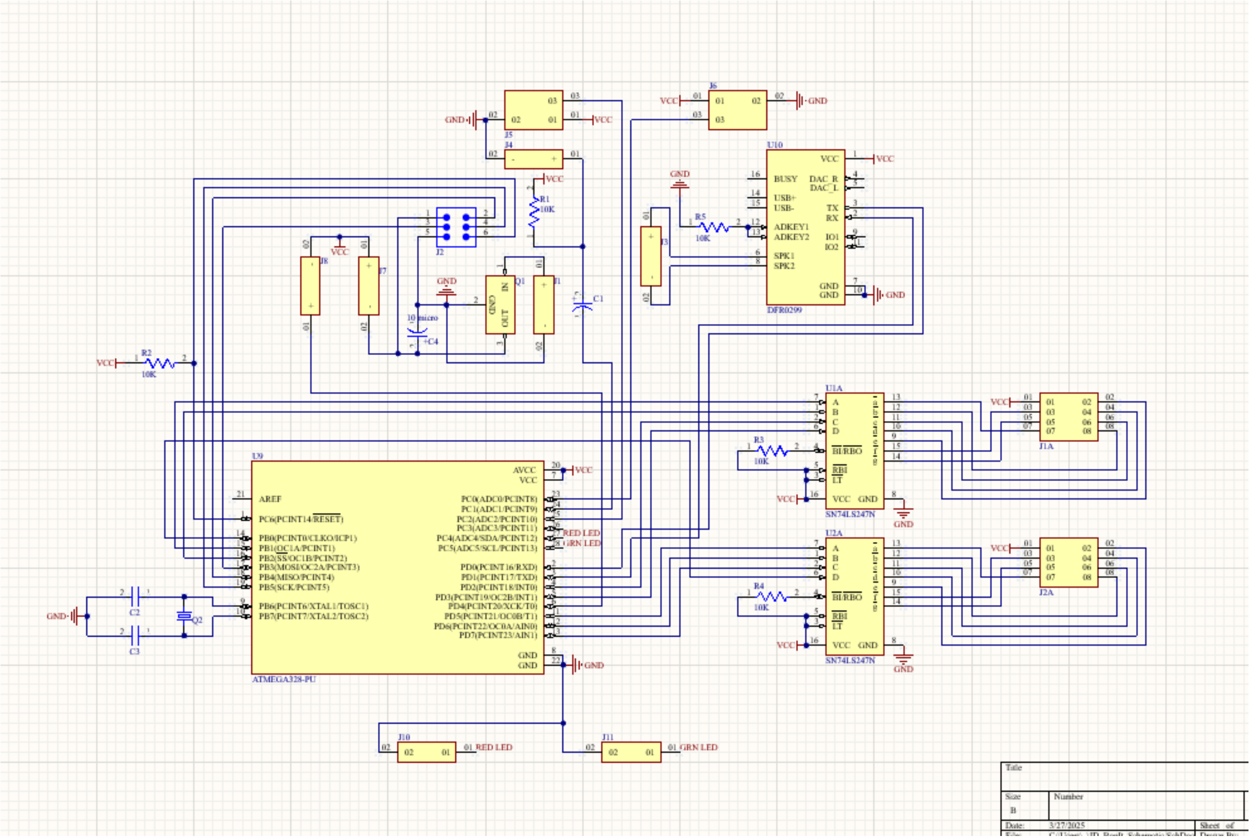

U9
ATMEGA328-PU
AVCC
VCC
AREF
PC6(PCINT14/RESET)
PB0(PCINT0/CLKO/ICP1)
PB1(OC1A/PCINT1)
PB2(SS/OC1B/PCINT2)
PB3(MOSI/OC2A/PCINT3)
PB4(MISO/PCINT4)
PB5(SCK/PCINT5)
PB6(PCINT6/XTAL1/TOSC1)
PB7(PCINT7/XTAL2/TOSC2)
PC0(ADC0/PCINT8)
PC1(ADC1/PCINT9)
PC2(ADC2/PCINT10)
PC3(ADC3/PCINT11)
PC4(ADC4/SDA/PCINT12)
PC5(ADC5/SCL/PCINT13)
PD0(PCINT16/RXD)
PD1(PCINT17/TXD)
PD2(PCINT18/INT0)
PD3(PCINT19/OC2B/INT1)
PD4(PCINT20/XCK/T0)
PD5(PCINT21/OC0B/T1)
PD6(PCINT22/OC0A/AIN0)
PD7(PCINT23/AIN1)
GND
RED LED
GRN LED
U10
DFR0299
BUSY
USB+
USB-
ADKEY1
ADKEY2
SPK1
SPK2
DAC_R
DAC_L
TX
RX
IO1
IO2
U1A
U2A
SN74LS247N
BI/RBO
RBI
LT
J1A
J2A
J2
J3
J4
J5
J6
J7
J8
J10
J11
Q1
Q2
IN
OUT
C1
C2
C3
C4
10 micro
R1
R2
R3
R4
R5
10K
VCC
GND
Title
Size
B
Number
Date:
3/27/2025
Sheet of
File:

PCB Layout:

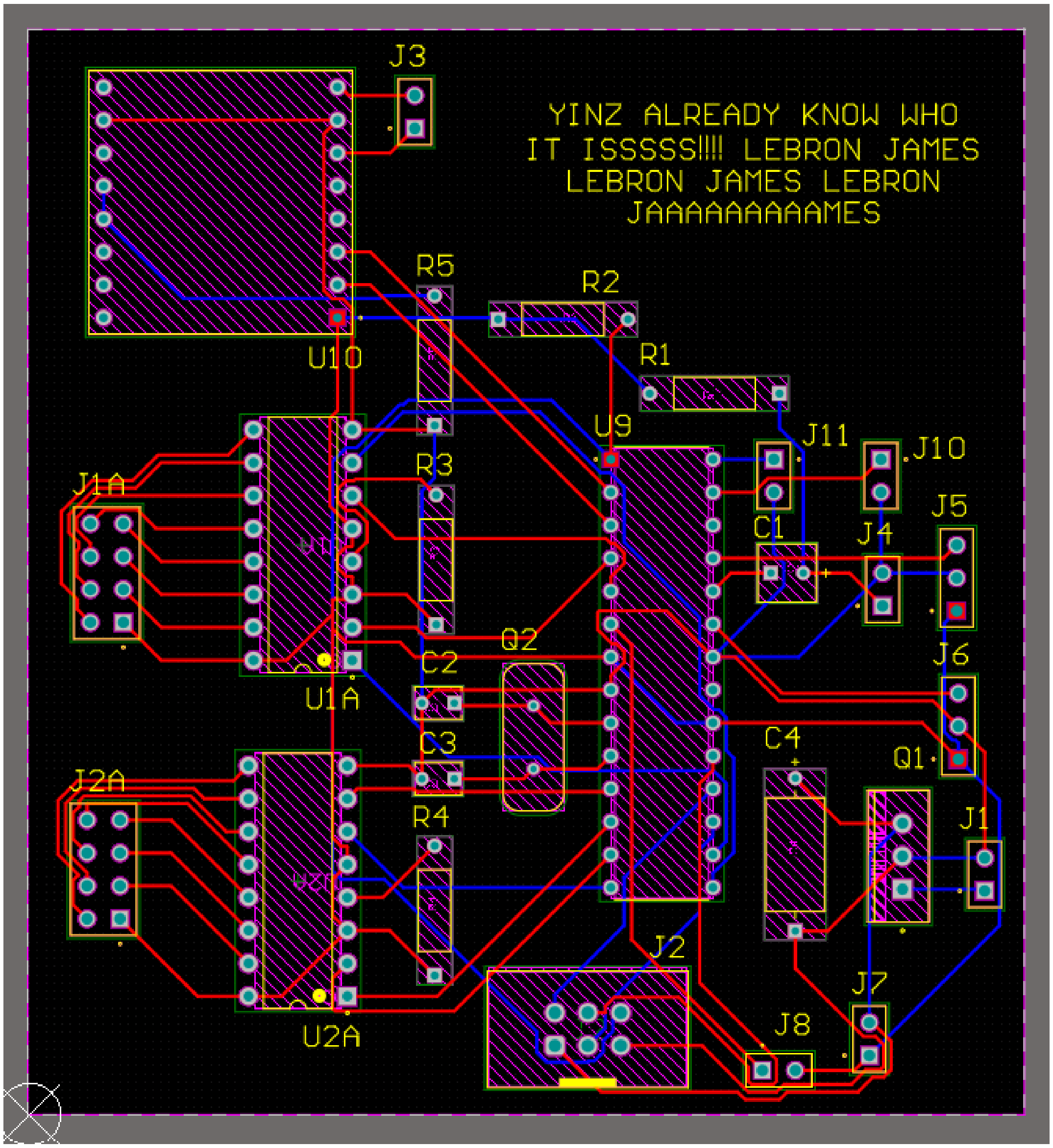
J3
YINZ ALREADY KNOW WHO
IT ISSSSS!!!! LEBRON JAMES
LEBRON JAMES LEBRON
JAAAAAAAAAMES
R5
R2
U10
R1
U9
J11
J10
J1A
R3
J5
C1
J4
Q2
C2
J6
U1A
C3
C4
Q1
J2A
R4
J1
J2
J7
J8
U2A