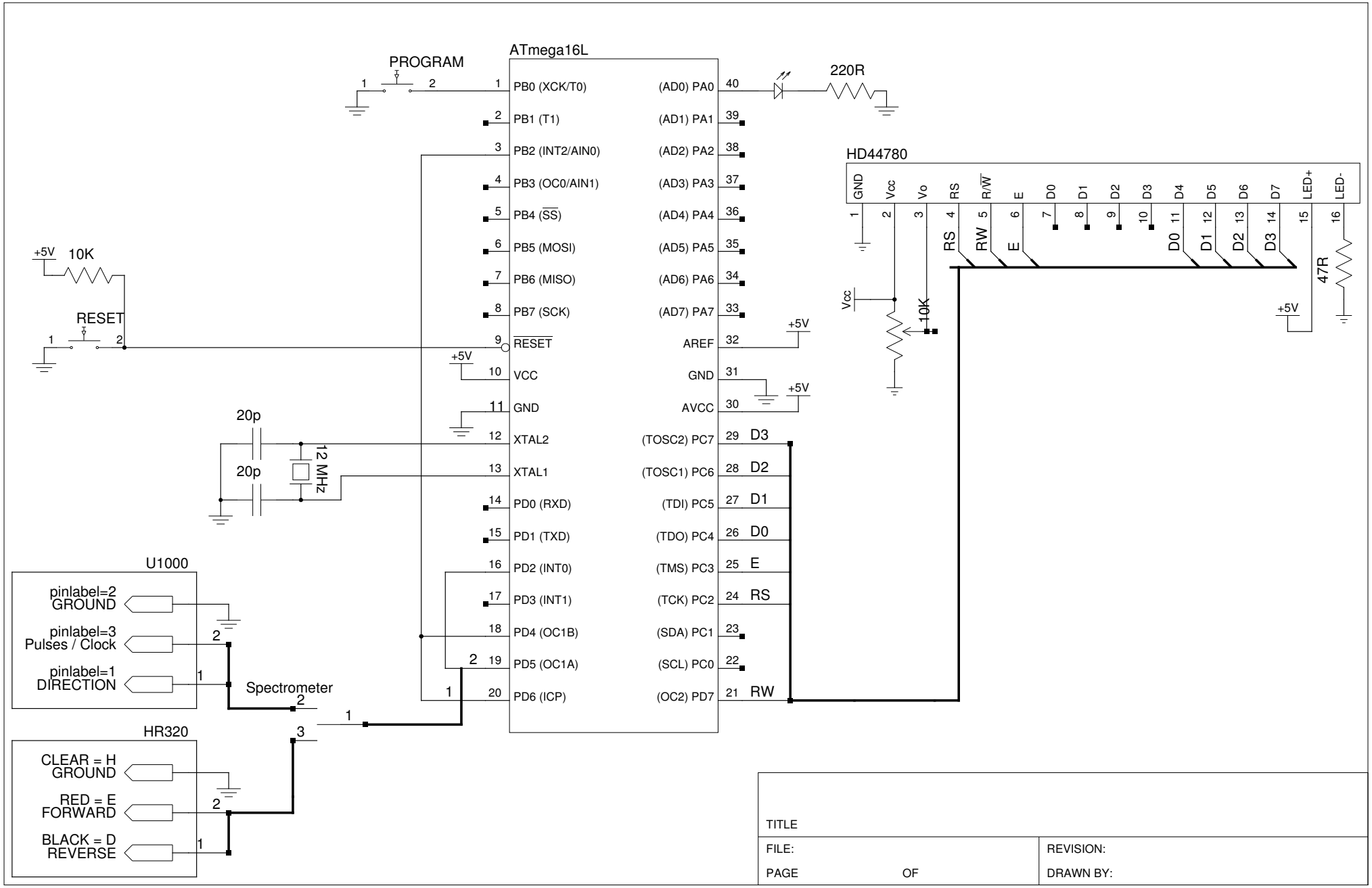
ATmega16L
PROGRAM
220R
HD44780
GND
Vcc
Vo
RS
R/W
E
D0
D1
D2
D3
D4
D5
D6
D7
LED+
LED-
47R
+5V
10K
RESET
20p
20p
12 MHz
U1000
pinlabel=2
GROUND
pinlabel=3
Pulses / Clock
pinlabel=1
DIRECTION
Spectrometer
HR320
CLEAR = H
GROUND
RED = E
FORWARD
BLACK = D
REVERSE
PB0 (XCK/T0)
PB1 (T1)
PB2 (INT2/AIN0)
PB3 (OC0/AIN1)
PB4 (SS)
PB5 (MOSI)
PB6 (MISO)
PB7 (SCK)
RESET
VCC
GND
XTAL2
XTAL1
PD0 (RXD)
PD1 (TXD)
PD2 (INT0)
PD3 (INT1)
PD4 (OC1B)
PD5 (OC1A)
PD6 (ICP)
(AD0) PA0
(AD1) PA1
(AD2) PA2
(AD3) PA3
(AD4) PA4
(AD5) PA5
(AD6) PA6
(AD7) PA7
AREF
GND
AVCC
(TOSC2) PC7
(TOSC1) PC6
(TDI) PC5
(TDO) PC4
(TMS) PC3
(TCK) PC2
(SDA) PC1
(SCL) PC0
(OC2) PD7
TITLE
FILE:
PAGE
OF
REVISION:
DRAWN BY: