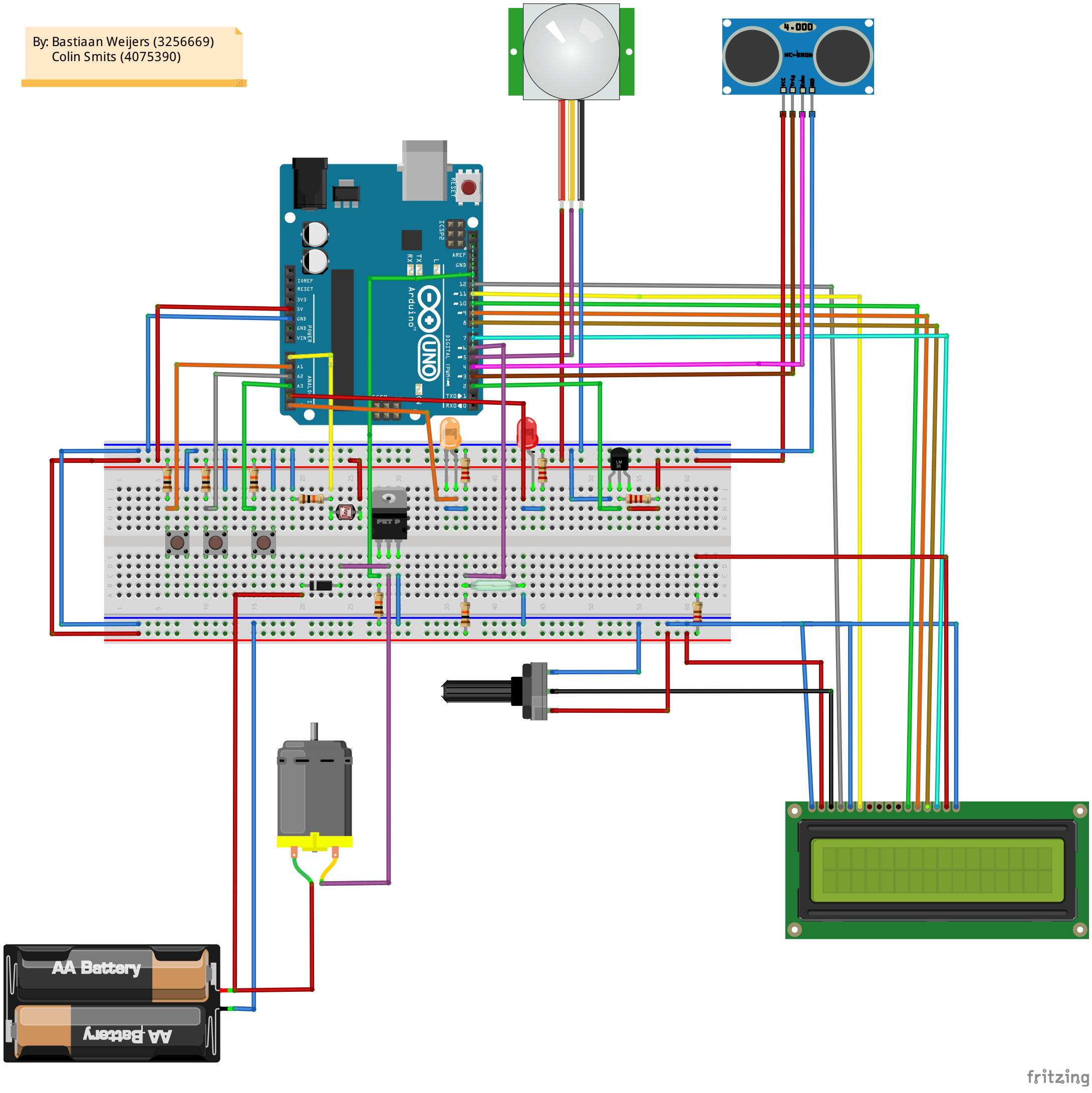By: Bastiaan Weijers (3256669)
Colin Smits (4075390)