1. COMPONENTS LIST AND CONNECTION BLOCK DIAGRAM w/ PINS

328PB w/ soldered headers
Multi-Functional Shield
Cables
UART connection to PC (over micro usb)

Block diagram:

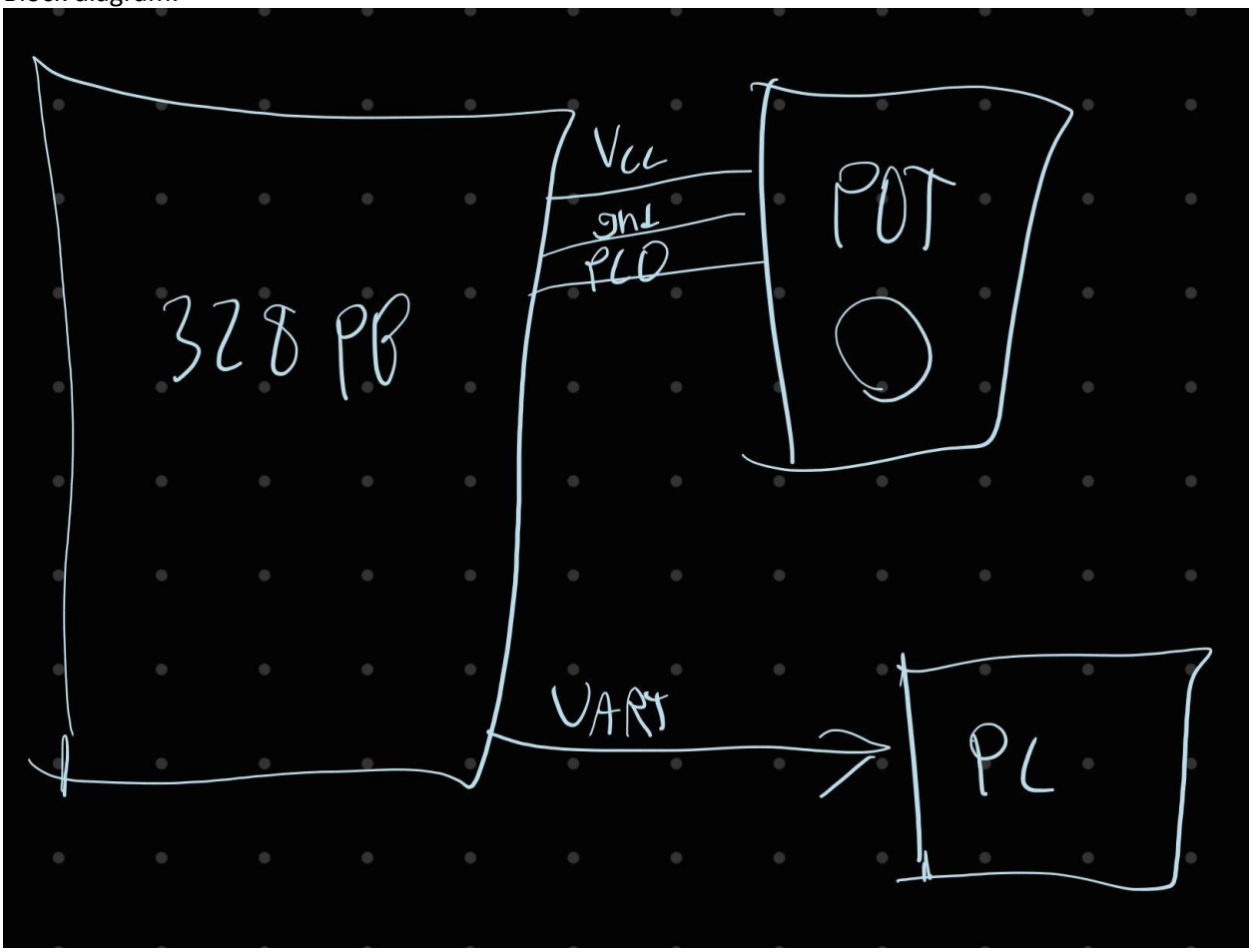

2. SCHEMATICS

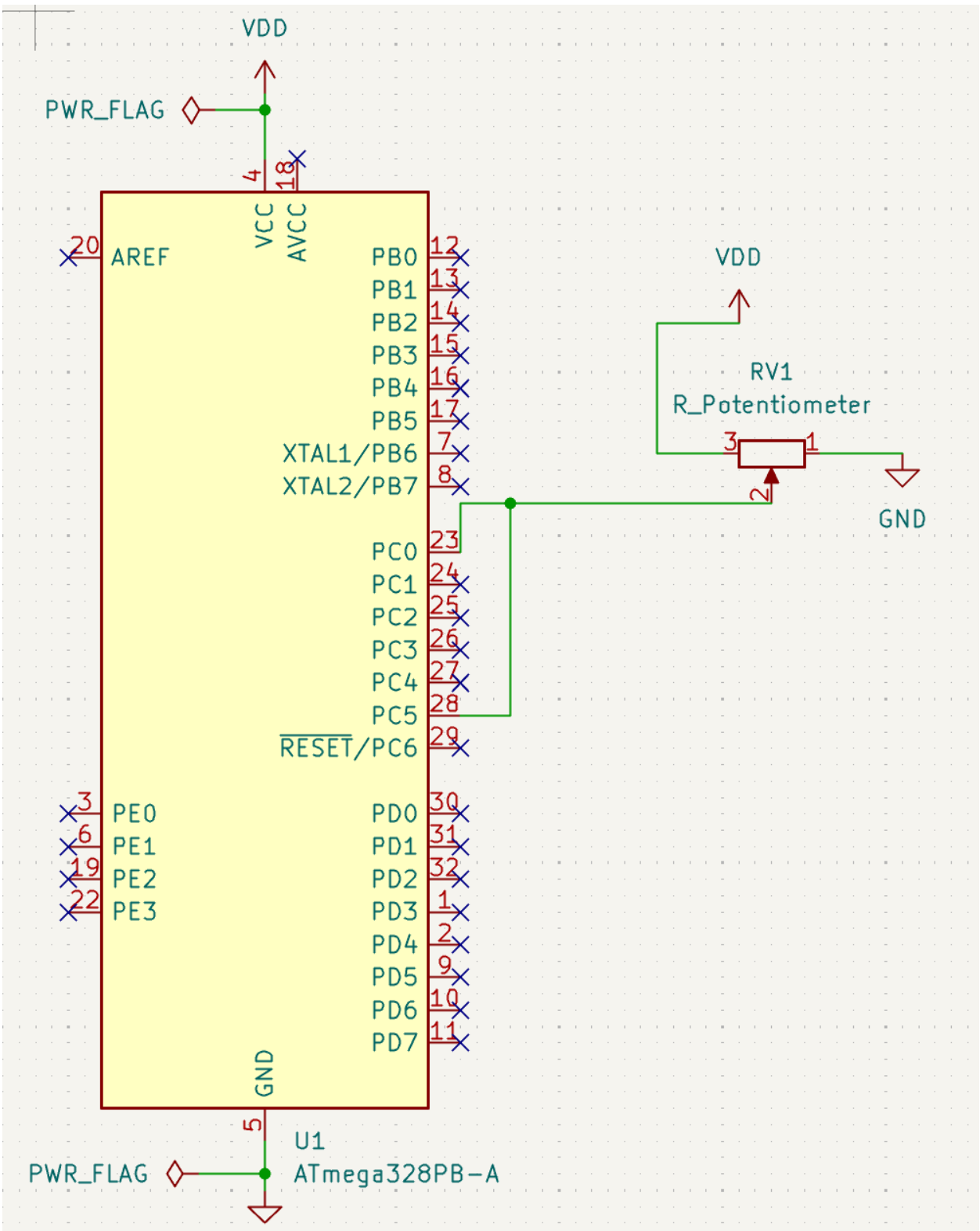

3. SCREENSHOTS OF EACH TASK OUTPUT (ATMEL STUDIO OUTPUT)

Screenshot of compilation:

```
    (1<<MUX2)|     // Analog Channel Selection Bits
    (0<<MUX1)|     // ADC5 (PC5)
    (1<<MUX0);
    ADCSRA = (1<<ADEN)|    // ADC ENable
    (0<<ADSC)|     // ADC Start Conversion
    (0<<ADATE)|    // ADC Auto Trigger Enable
    (0<<ADIF)|     // ADC Interrupt Flag
    (0<<ADIE)|     // ADC Interrupt Enable
    (1<<ADPS2)|    // ADC Prescaler Select Bits (32 prescaler)
    (0<<ADPS1)|
    (1<<ADPS0);
}

void timer_init (void)
{
    TCCR1B |= 5; //(1 << CS12) | (1 << CS10); // Sets prescaler to 1024
    TIMSK1 = (1 << TOIE1); // Enables overflow flag
    TCNT1 = 65379; // 0.01 second delay = (0xFFFF) - TCNT = 65535 - 156 = 65379
    sei();
}

void usart_send (unsigned char ch)
{
    while (! (UCSR0A & (1<<UDRE0)));     //wait until UDR0 is empty
    UDR0 = ch;                            //transmit ch
}

void usart_print(char* str)
{
    while((*str != '\0')){
        while (!(UCSR0A & (1 << UDRE0)));
        UDR0 = *str;
        str++;
    }
}
```

Screenshot of python GUI output:

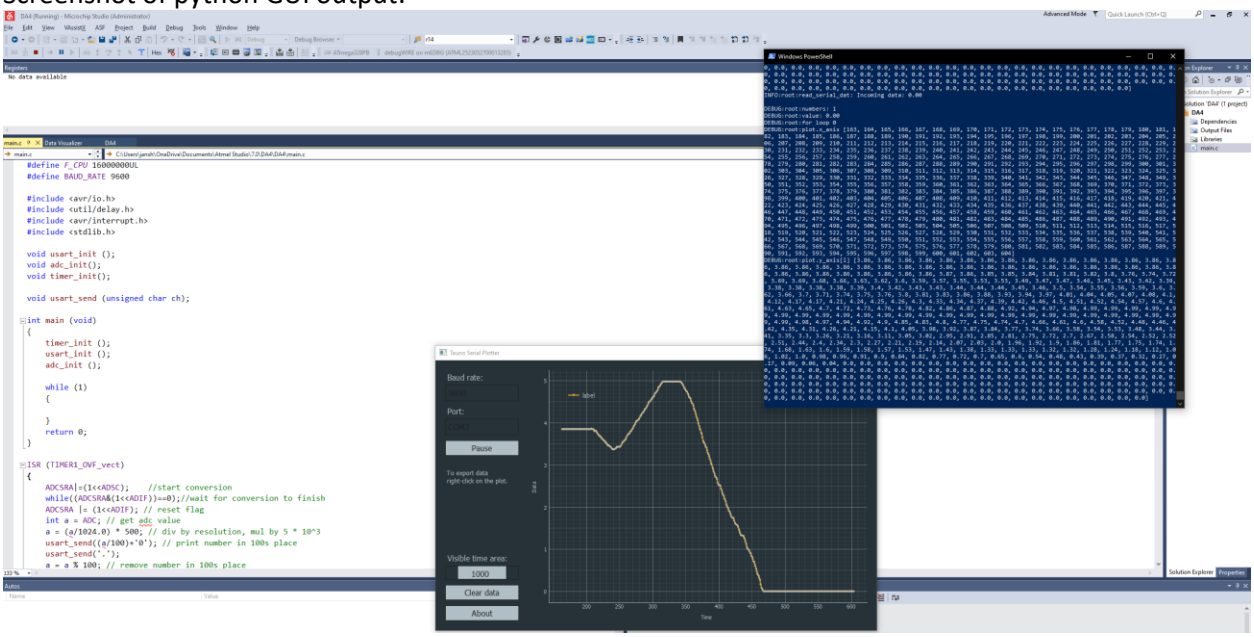
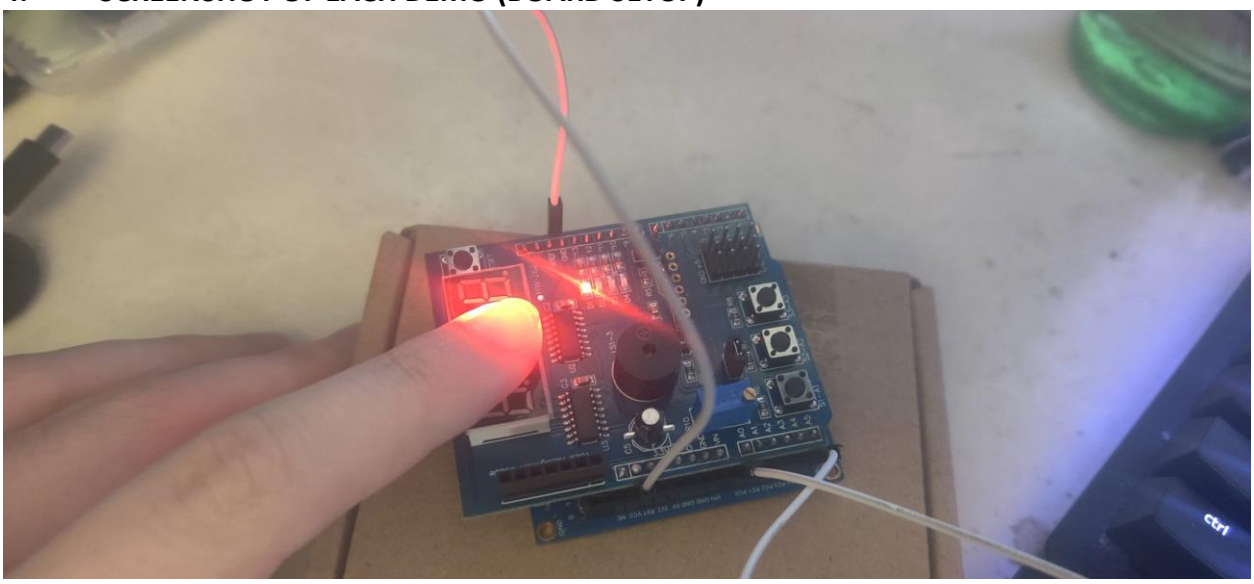
4. SCREENSHOT OF EACH DEMO (BOARD SETUP)