1. COMPONENTS LIST AND CONNECTION BLOCK DIAGRAM w/ PINS

328PB w/ soldered headers
Multi-Functional Shield
Motor driver
DC motor
Cables
UART connection to PC (over micro usb)

Block diagram:

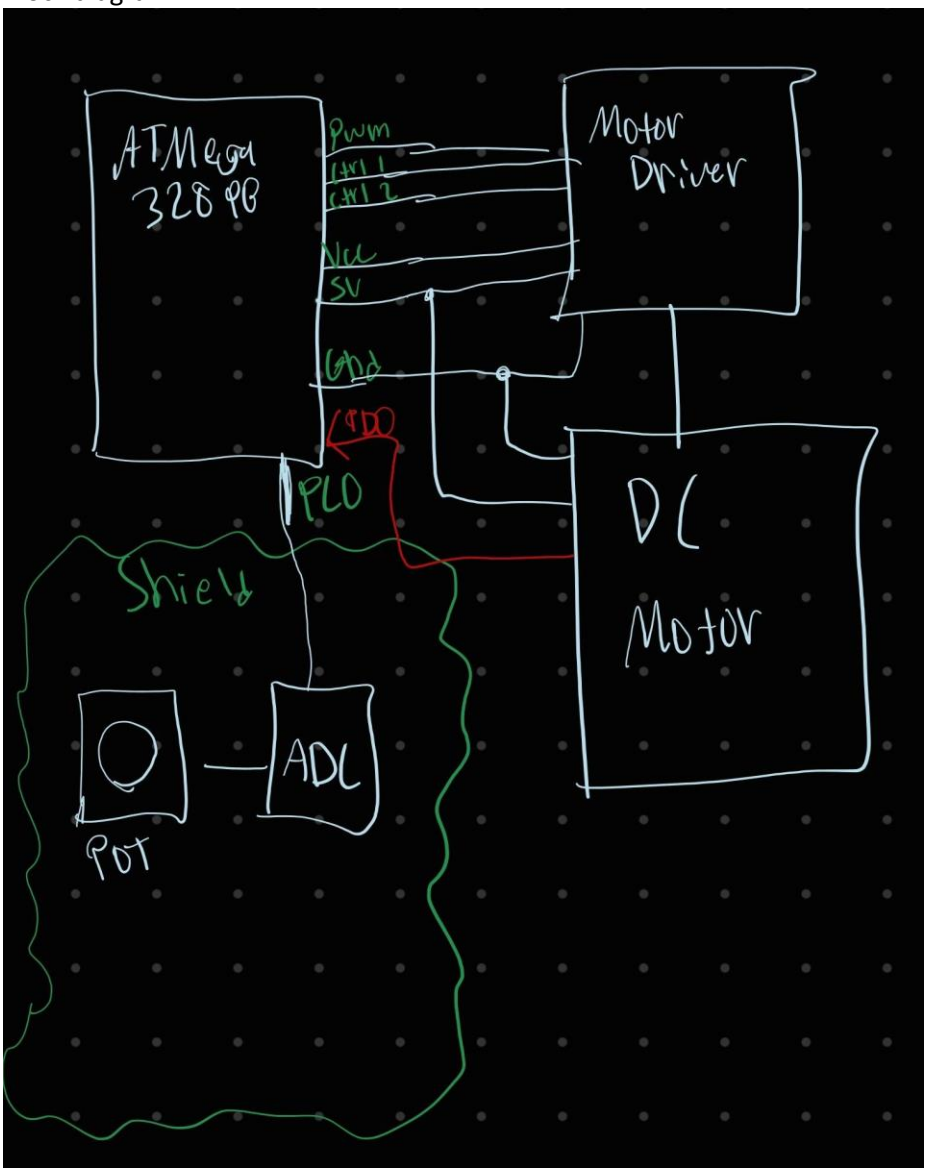

2. SCHEMATICS

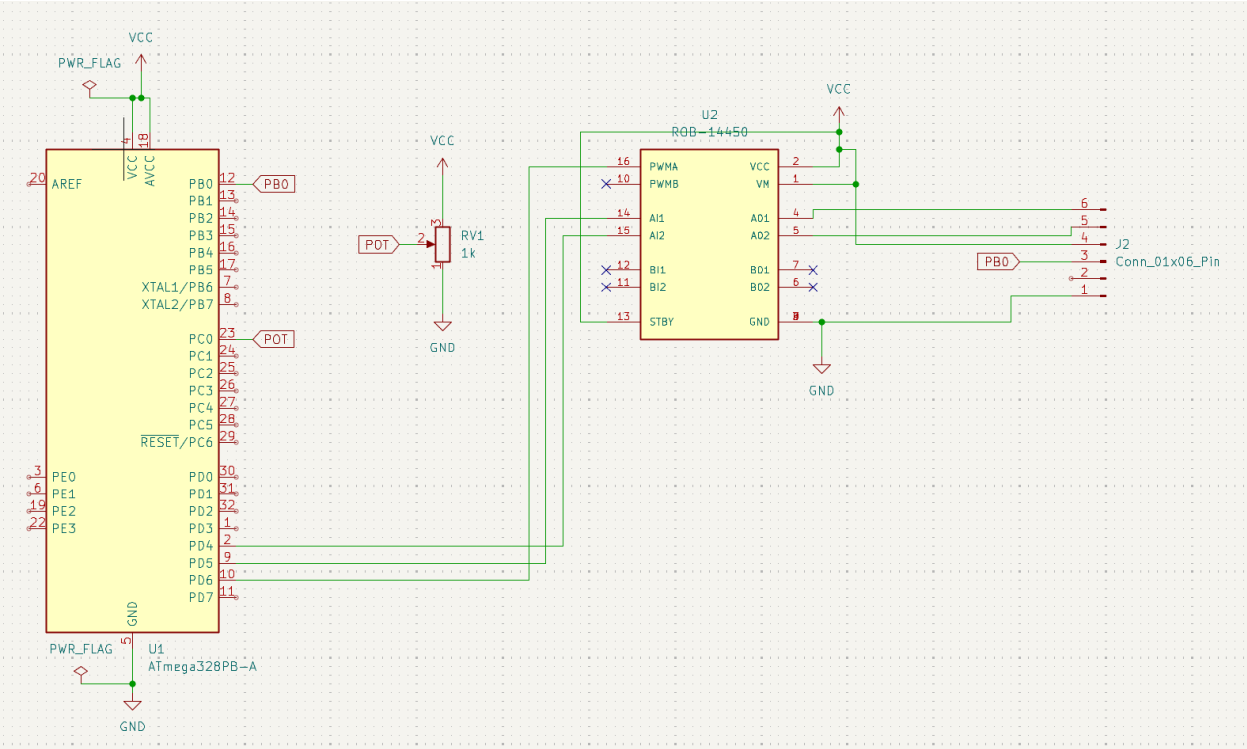

(Note the 6 pins represent the DC motor with the bottom 4 connections being for feedback)

3. SCREENSHOTS OF EACH TASK OUTPUT (ATMEL STUDIO OUTPUT)

Screenshot of SerialPlot output:

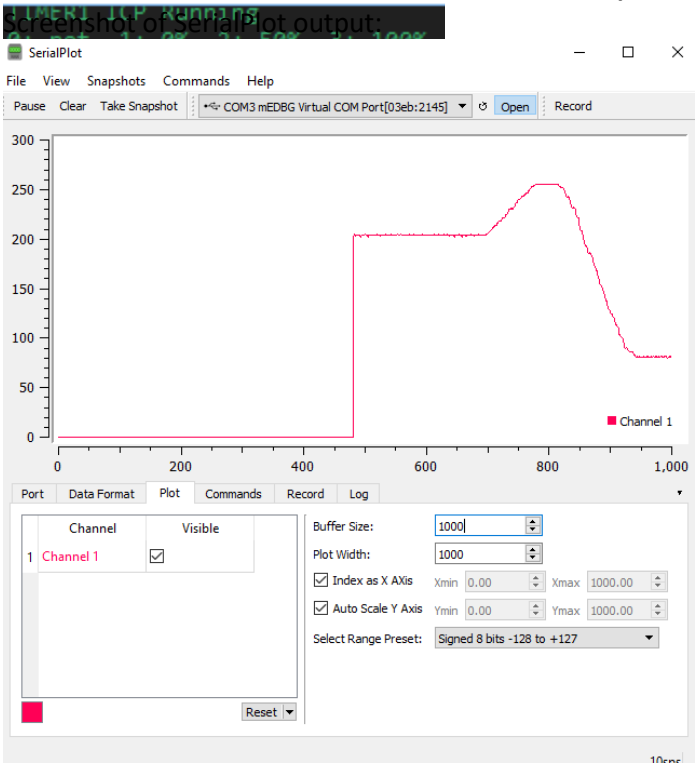

Screenshot of terminal output:

4. PICTURE OF BOARD SETUP

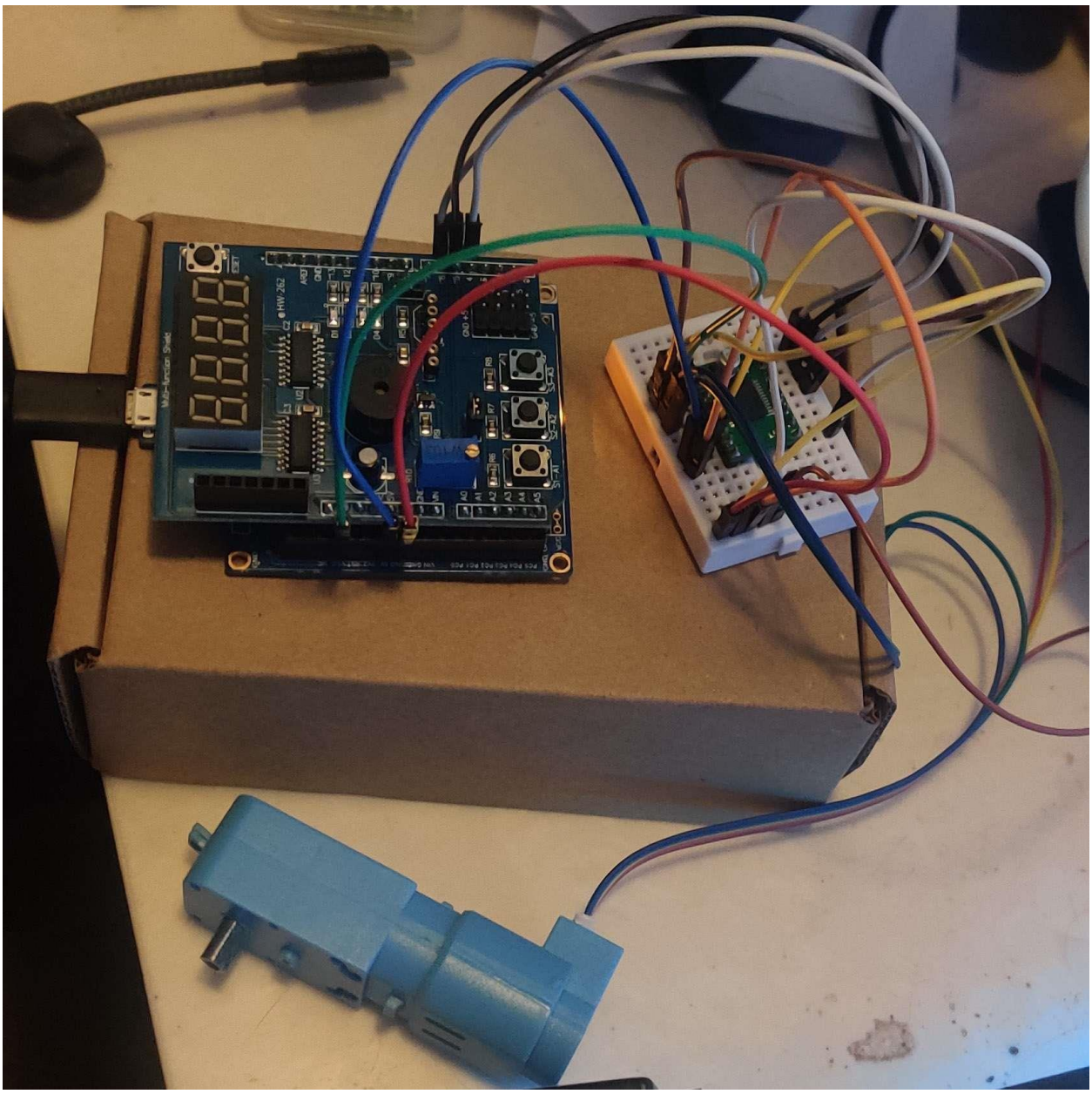

(note pb0 connection removed in favor of logic analyzing in this photo)