## 1. COMPONENTS LIST AND CONNECTION BLOCK DIAGRAM w/ PINS

328PB w/ soldered headers
Logic Analyzer
Multi-Functional Shield
Cables

Block diagram:

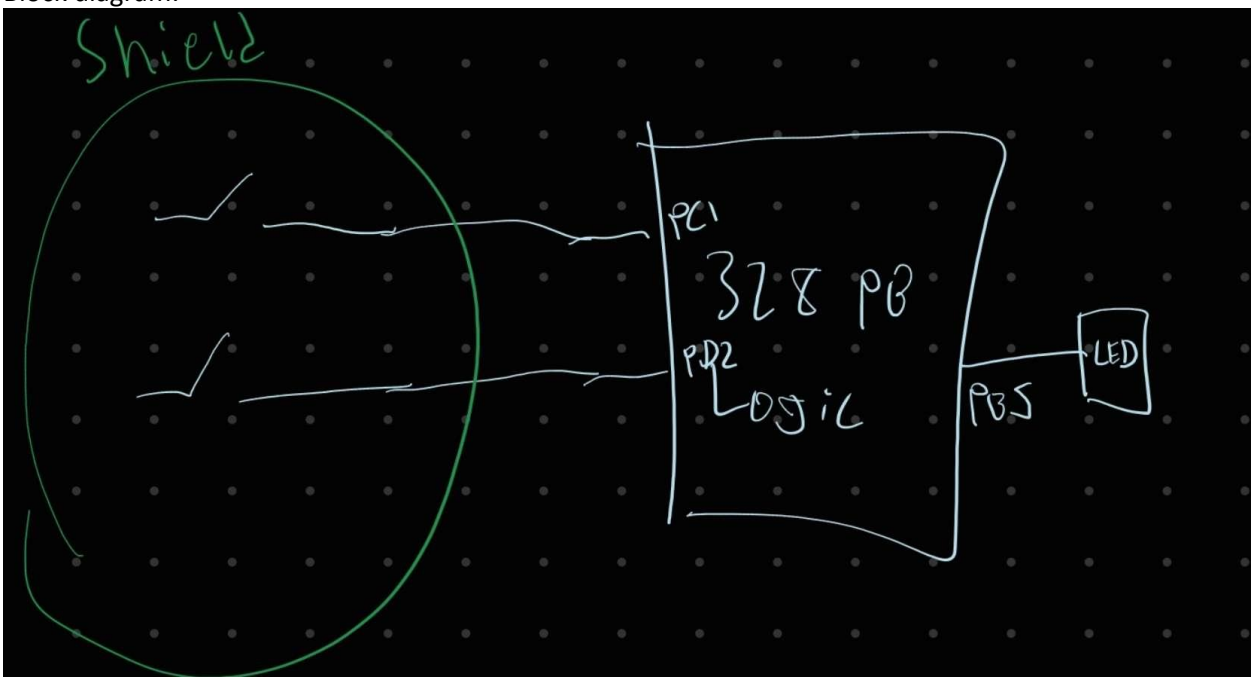

## 2. SCHEMATICS

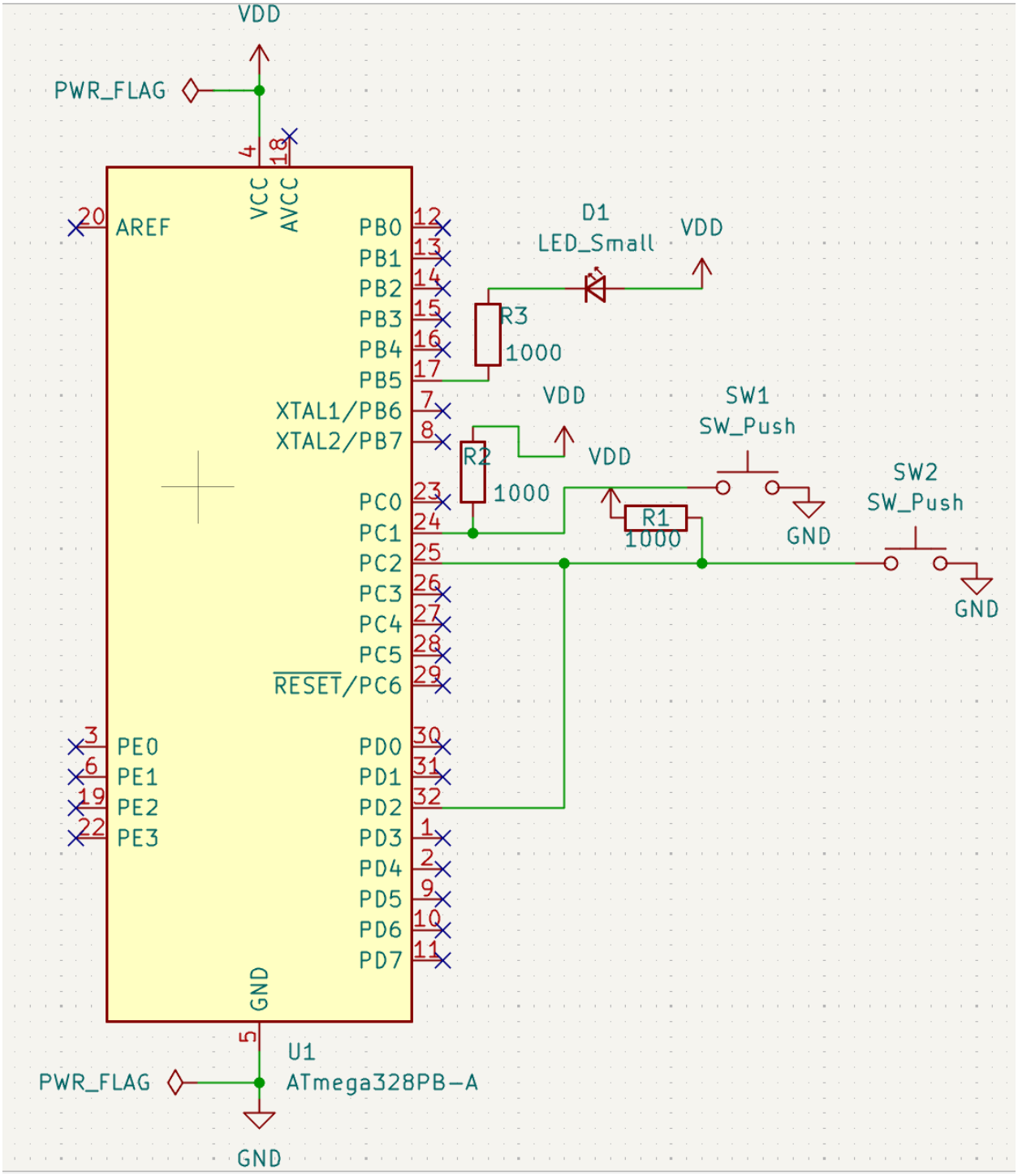

## 3. SCREENSHOTS OF EACH TASK OUTPUT (ATMEL STUDIO OUTPUT)

N/A – No outputs in this assignment. The assignment pdf did request screenshot of successful compilation so here they are:

Show output from: Build

```
------ Build started: Project: DA2 Task 1 ASM, Configuration: Debug AVR ------
========== Build: 1 succeeded or up-to-date, 0 failed, 0 skipped ==========
```

```
------ Build started: Project: DA2 Task 2 ASM, Configuration: Debug AVR ------
========== Build: 1 succeeded or up-to-date, 0 failed, 0 skipped ==========
```

Show output from: Build

```
------ Build started: Project: DA2 Task 3 ASM, Configuration: Debug AVR ------
========== Build: 1 succeeded or up-to-date, 0 failed, 0 skipped ==========
```

Show output from: Build

```
------ Build started: Project: DA2 Task 1 C, Configuration: Debug AVR ------
========== Build: 1 succeeded or up-to-date, 0 failed, 0 skipped ==========
```

Show output from: Build

```
------ Build started: Project: DA2 Task 2 C, Configuration: Debug AVR ------
========== Build: 1 succeeded or up-to-date, 0 failed, 0 skipped ==========
```

Show output from: Build

```
------ Build started: Project: DA2 Task 3 C, Configuration: Debug AVR ------
========== Build: 1 succeeded or up-to-date, 0 failed, 0 skipped ==========
```

## 4. SCREENSHOT OF EACH DEMO (BOARD SETUP)
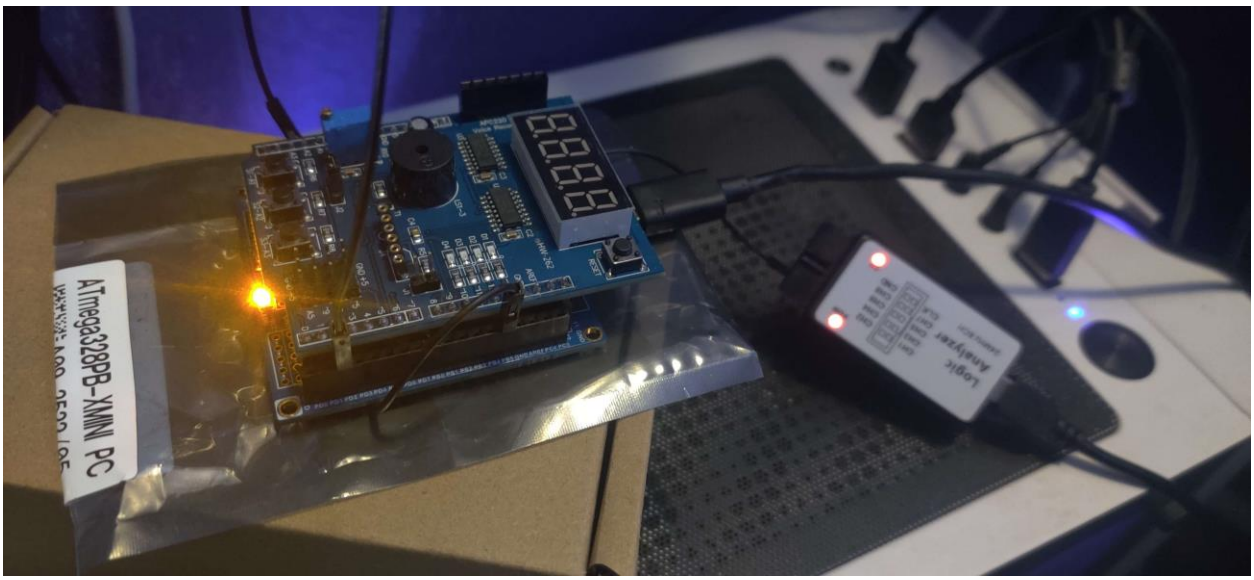
Board is the same for all: