## 1. COMPONENTS LIST AND CONNECTION BLOCK DIAGRAM w/ PINS

328PB w/ soldered headers
BMI160 Gyro
Cables
UART connection to PC (over micro usb)
SSD1306 OLED screen

## 3. SCHEMATICS

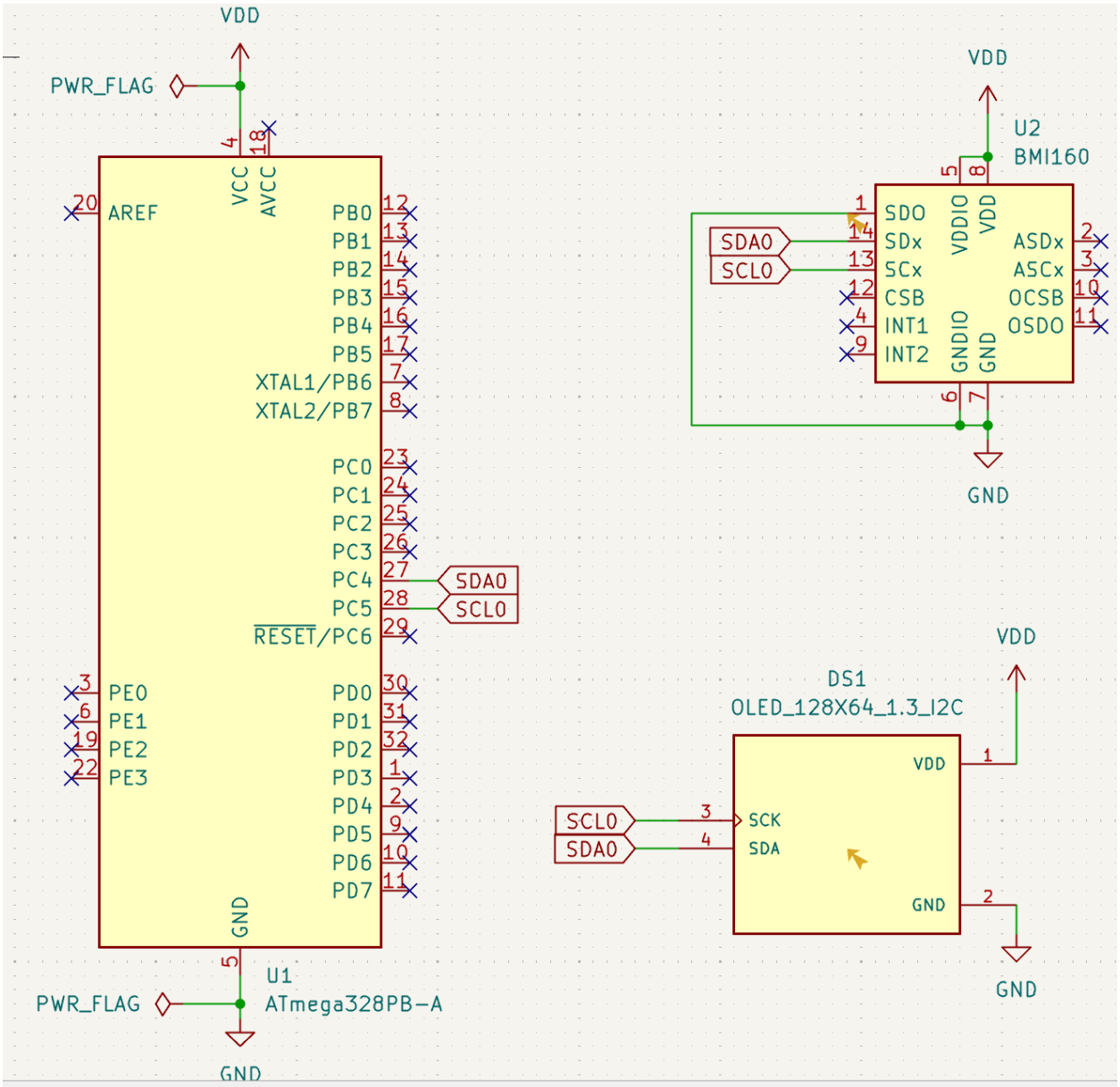

## 4. SCREENSHOTS OF EACH TASK OUTPUT (ATMEL STUDIO OUTPUT)

Screenshot of Terminal output:

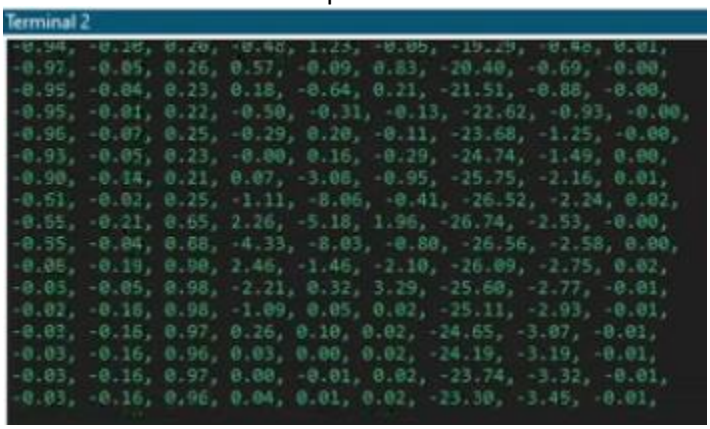


Screenshots of pySerial (video is clearer)

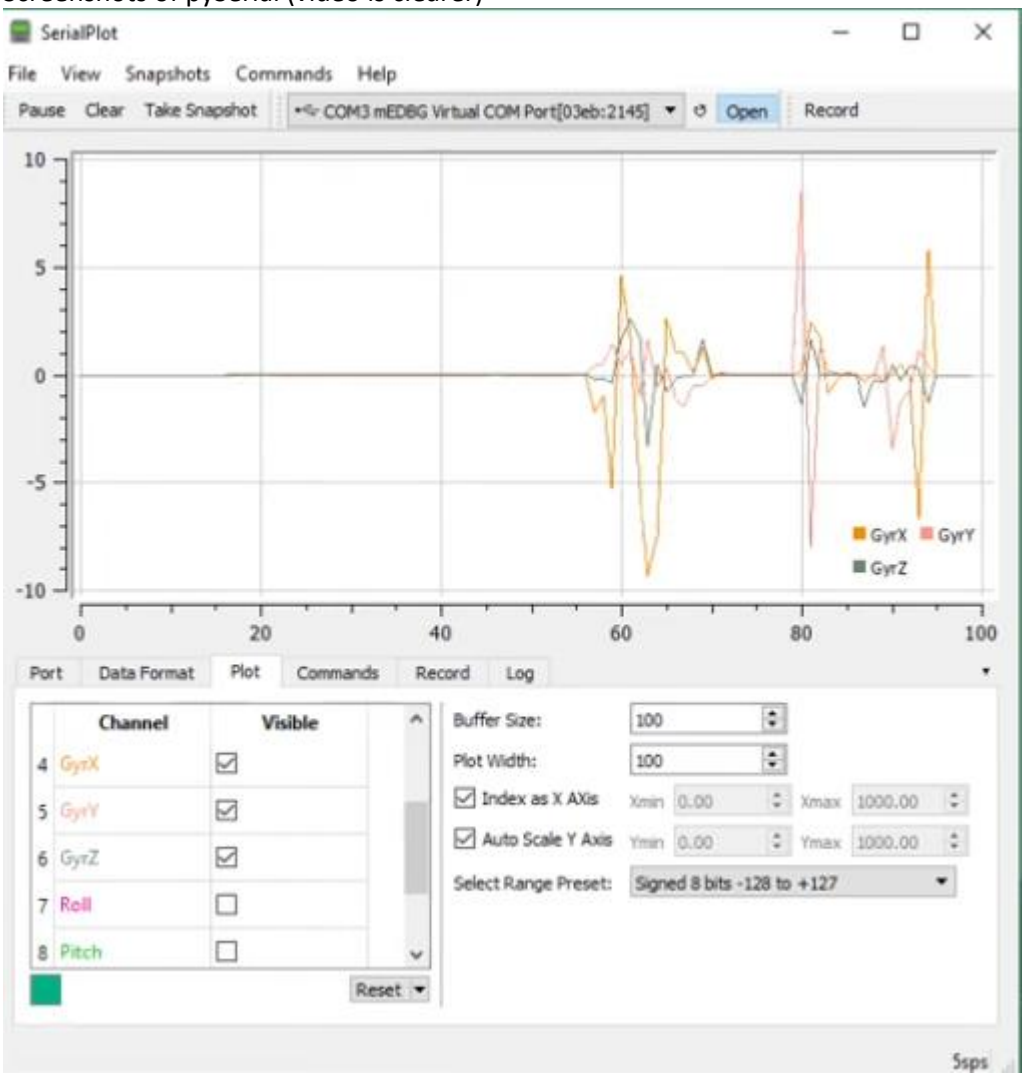

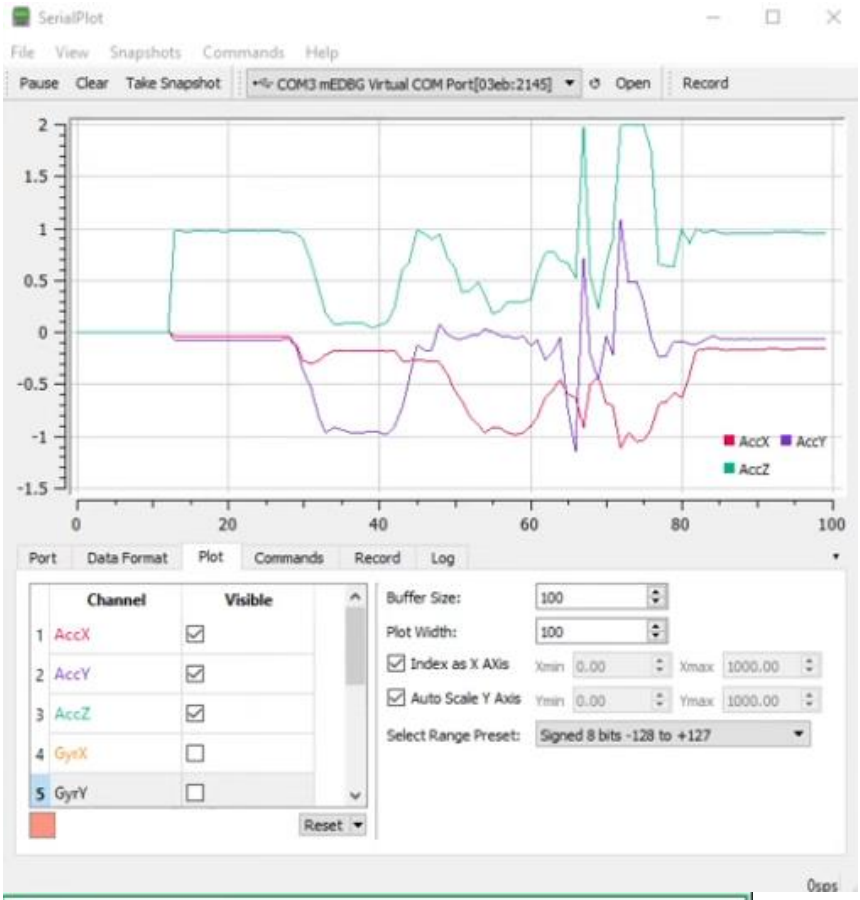
SerialPlot
File View Snapshots Commands Help
Pause Clear Take Snapshot
COM3 mEDBG Virtual COM Port[03eb:2145]
Open
Record
AccX
AccY
AccZ
Port Data Format Plot Commands Record Log
Channel
Visible
1 AccX
2 AccY
3 AccZ
4 GyrX
5 GyrY
Buffer Size: 100
Plot Width: 100
Index as X Axis
Auto Scale Y Axis
Select Range Preset: Signed 8 bits -128 to +127
Reset
0sps

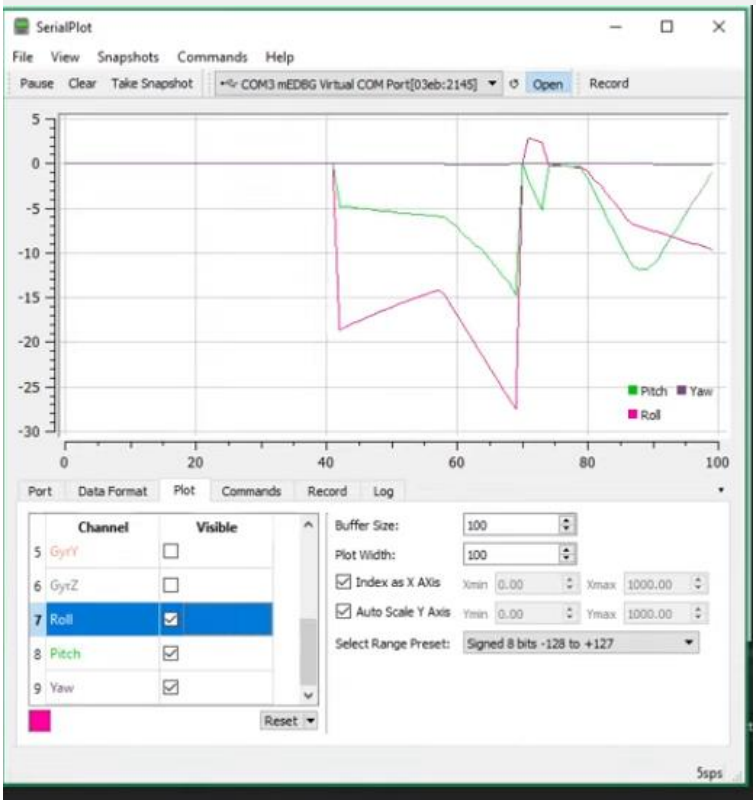
SerialPlot
File View Snapshots Commands Help
Pause Clear Take Snapshot
COM3 mEDBG Virtual COM Port[03eb:2145]
Open
Record
Pitch
Yaw
Roll
Port Data Format Plot Commands Record Log
Channel
Visible
5 GyrY
6 GyrZ
7 Roll
8 Pitch
9 Yaw
Buffer Size: 100
Plot Width: 100
Index as X Axis
Auto Scale Y Axis
Select Range Preset: Signed 8 bits -128 to +127
Reset
5sps
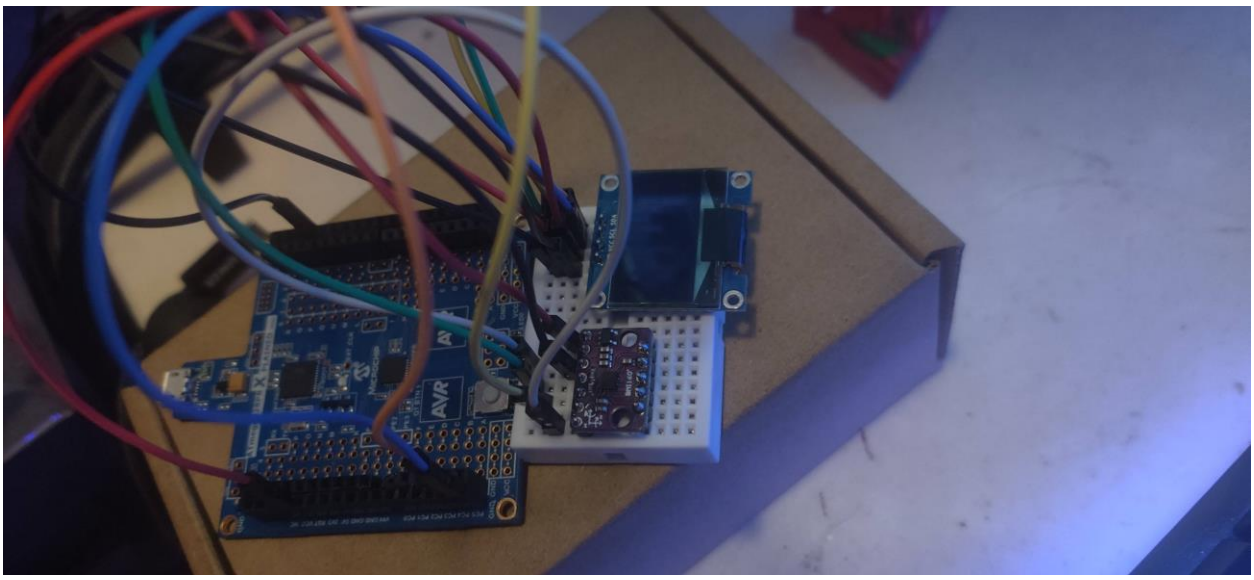
## 5. PICTURE OF BOARD SETUP