KiCad PCB Design

Joshua Choquette

Goal:
Create a PCB of an Arduino compatible shield that has all the functionality of all of my previous Design Assignments for the ATMega328PB.

I. Components

Two LEDs – PD5 & PD6
Two push buttons – PD2 & PD3
A Potentiometer – PC0
A 7-Segment display
Headers for Ultrasonic sensor, DC motor, and servo motor
I2C OLED Display
I2C BMI160 Gyro

II. Schematic, PCB, Models

Here I will list all schematic, PCB, and 3D model images. There are zoomed images of the larger ones for clarity.

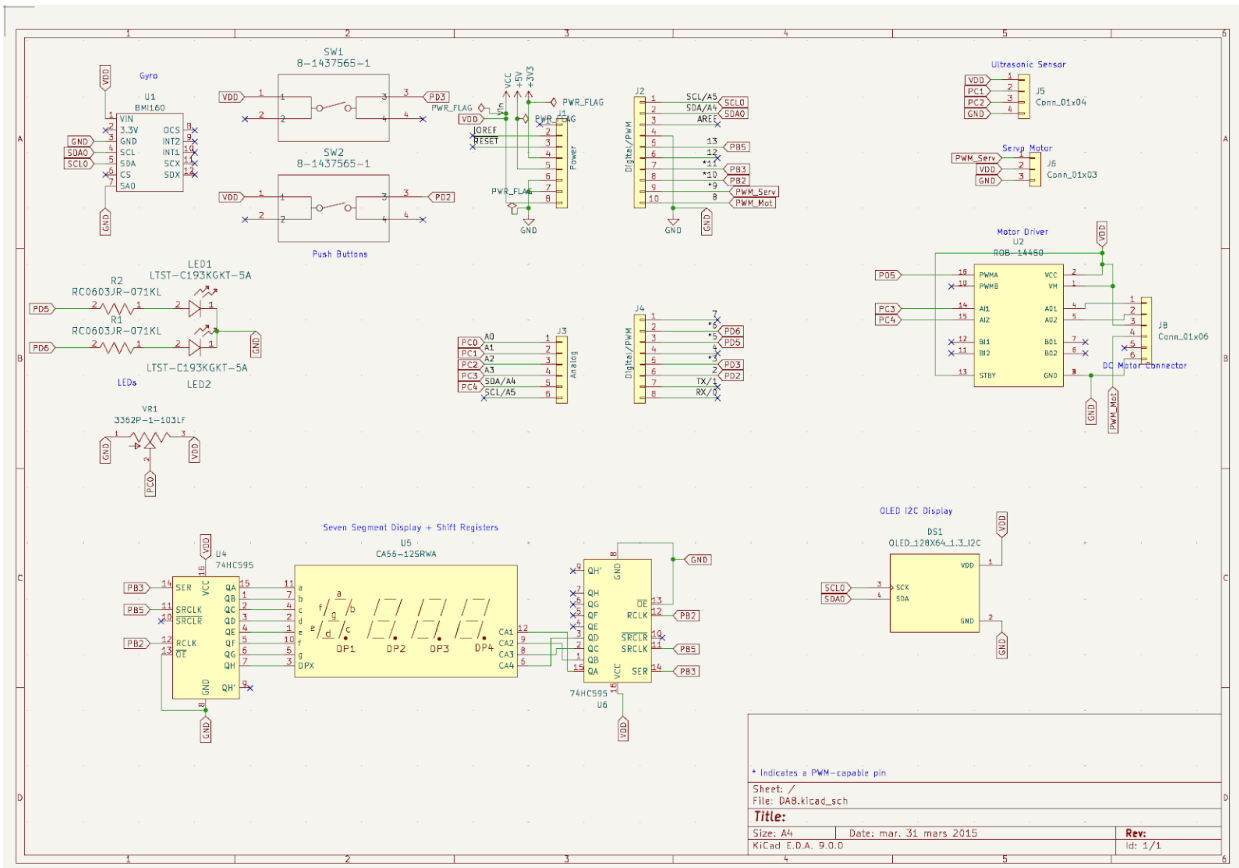

Final Schematic

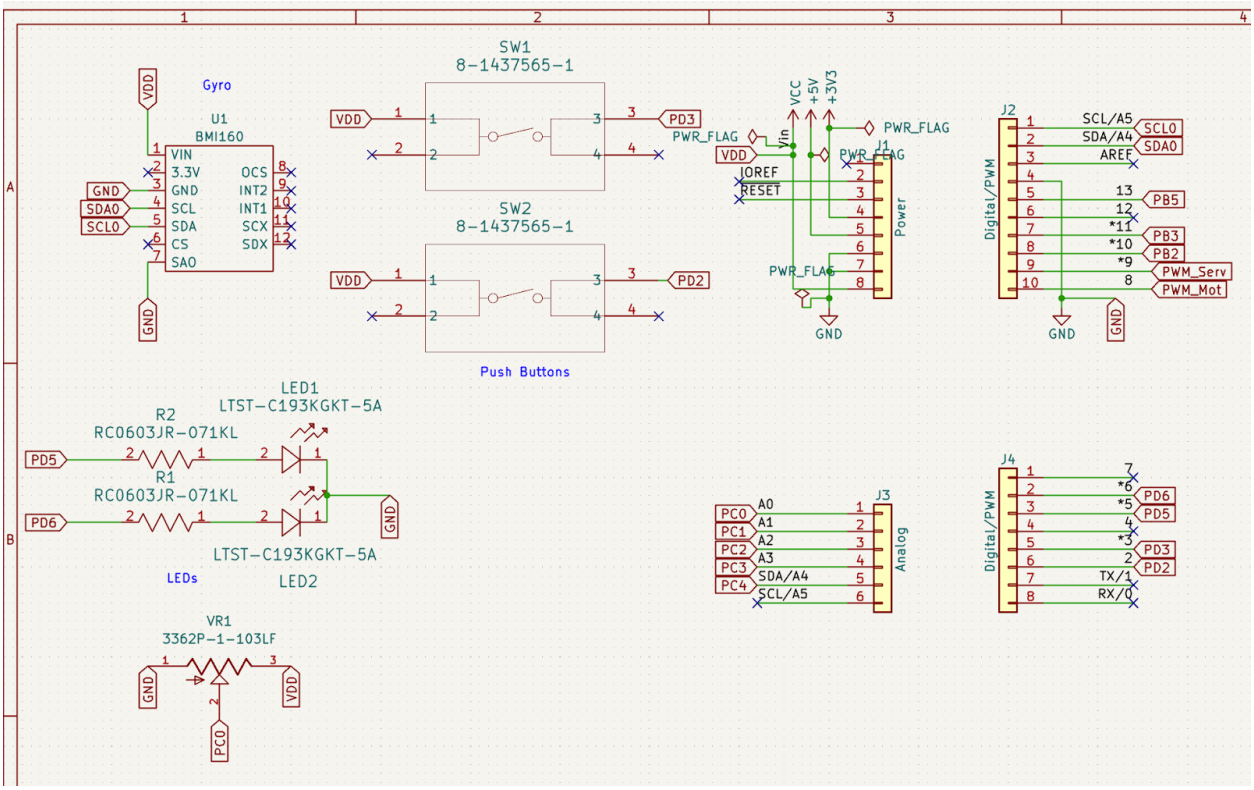

Upper left quadrant.

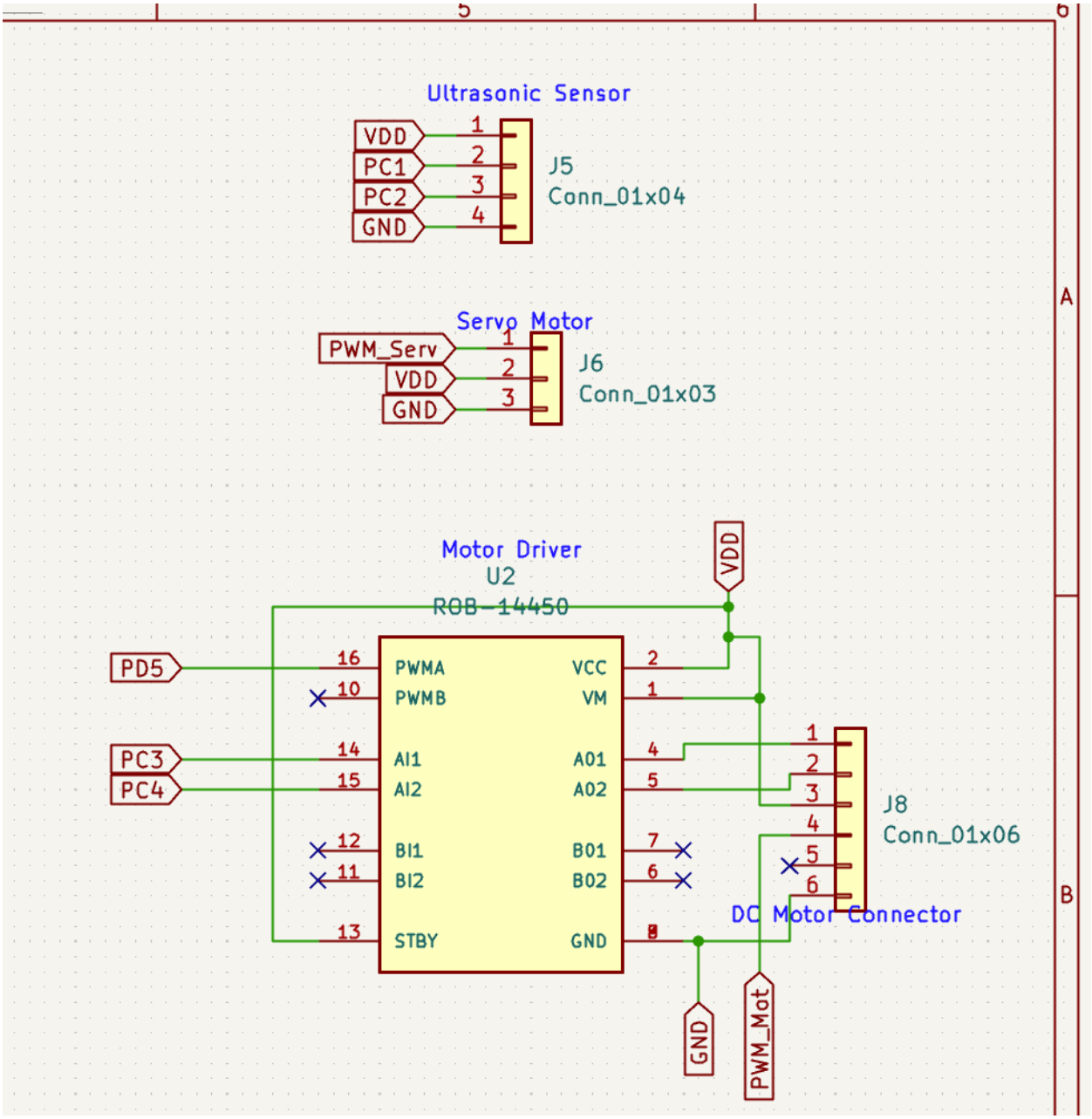

Upper right quadrant.

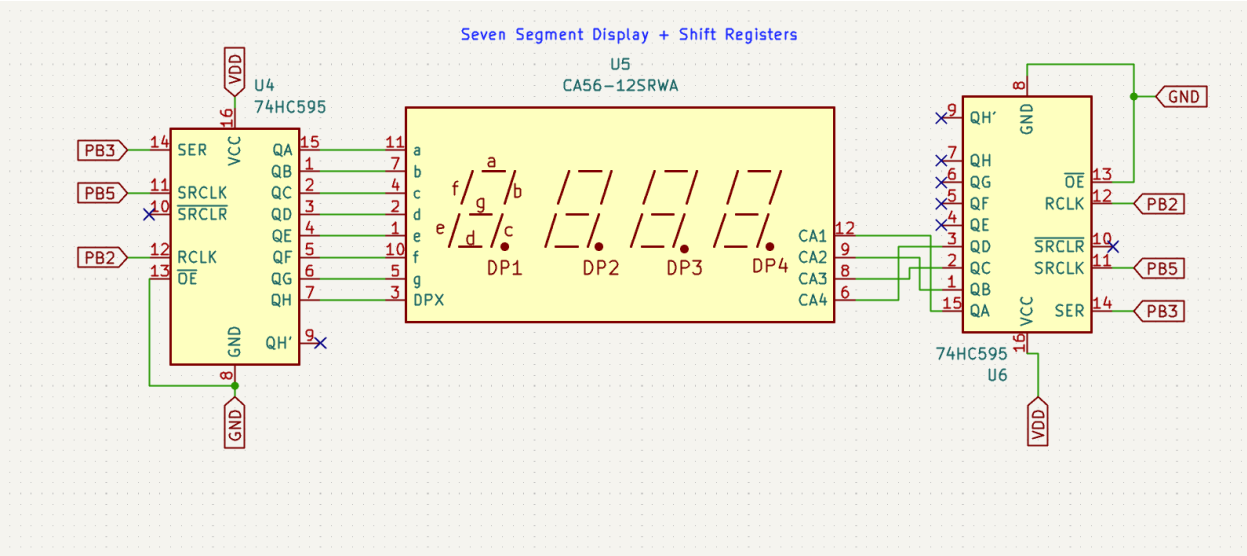

Lower left quadrant.

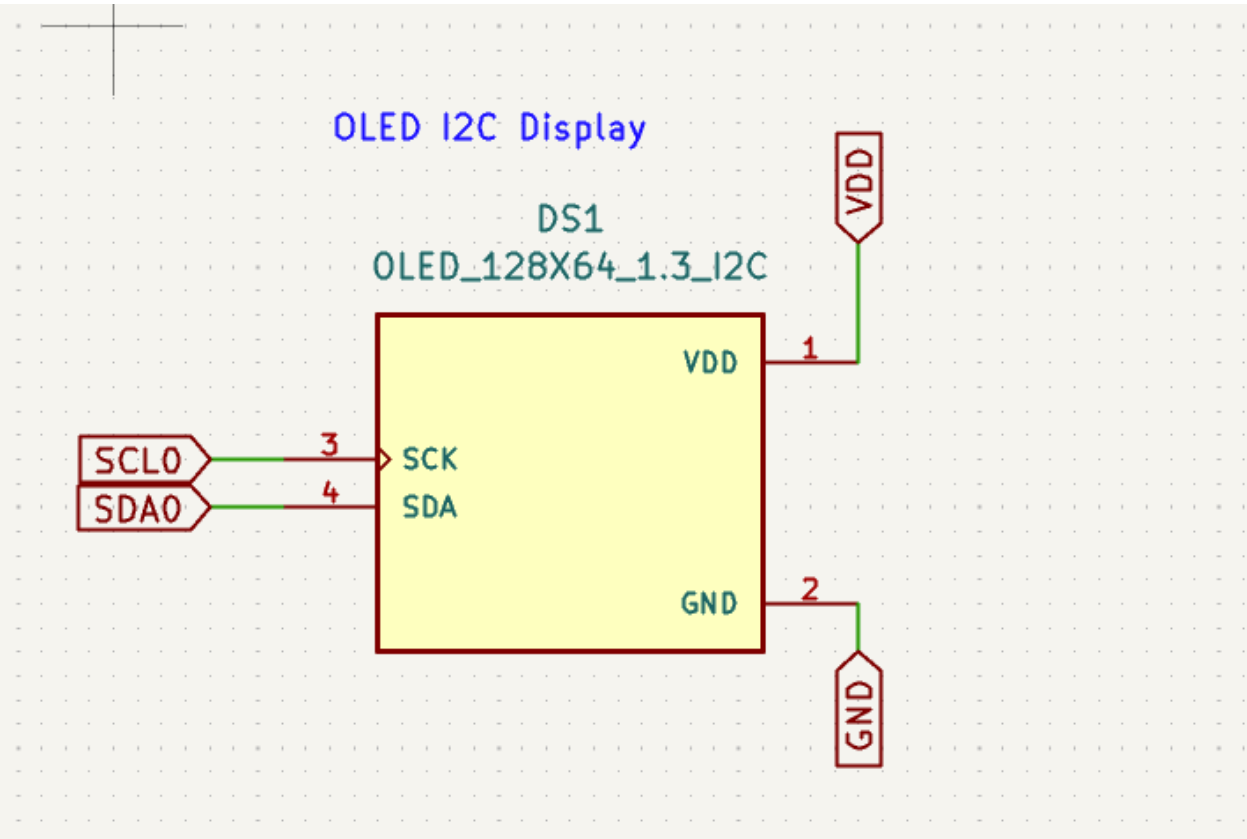

Lower right quadrant

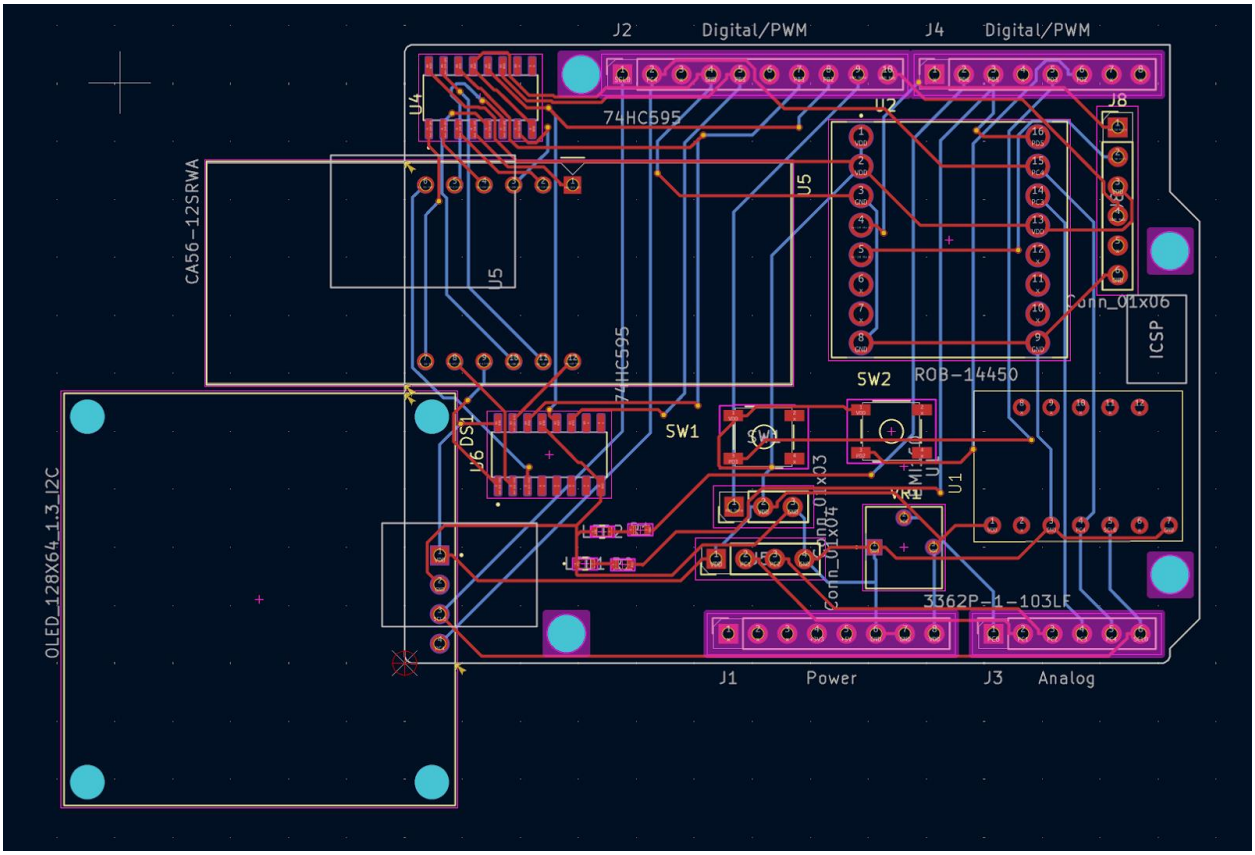

Final PCB Design

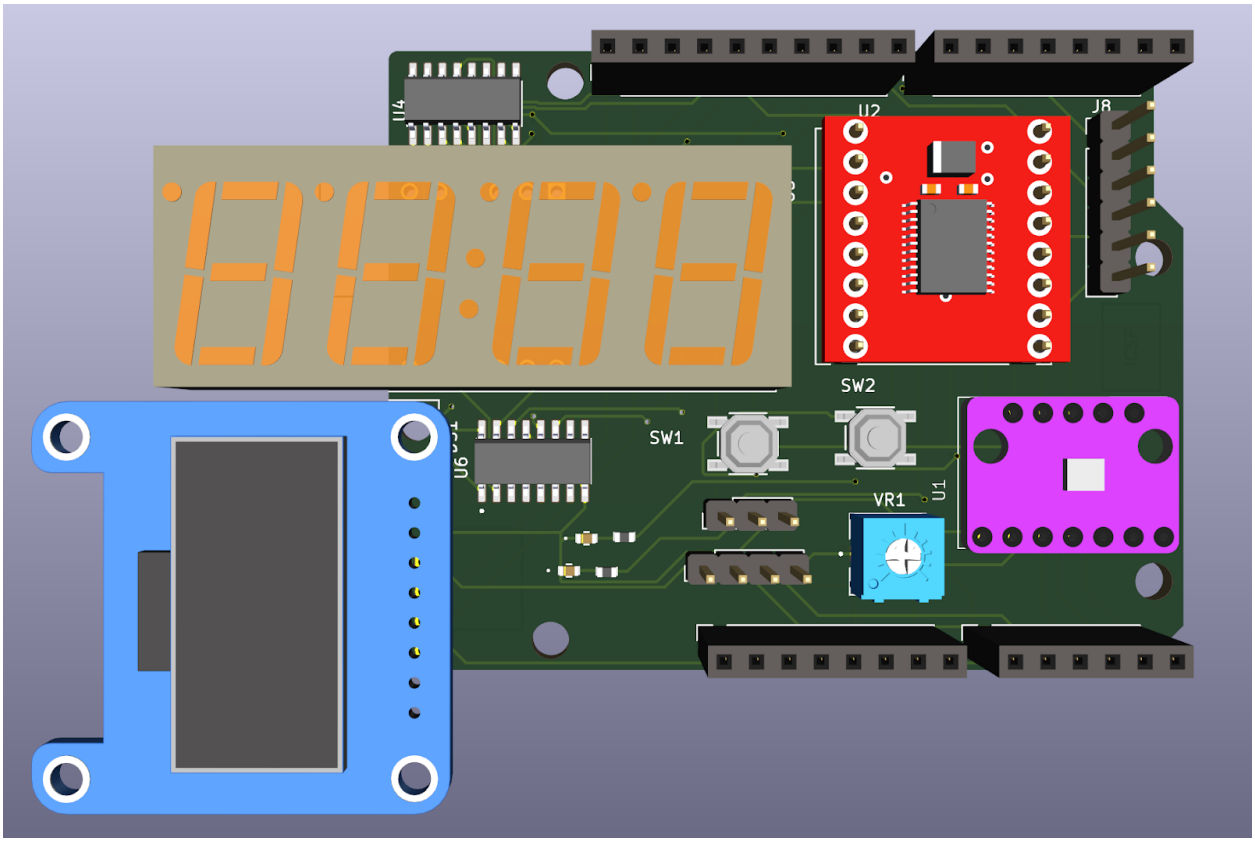

Final 3D Model Design

Some snapshots with important details mentioned below them:

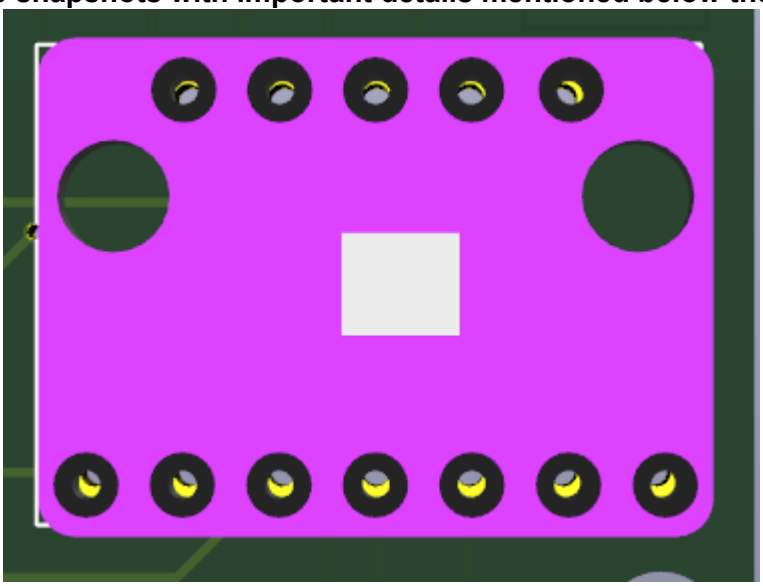

Found some 3d model for bmi, though it is not as accurate as the one we made custom, it gives the idea.

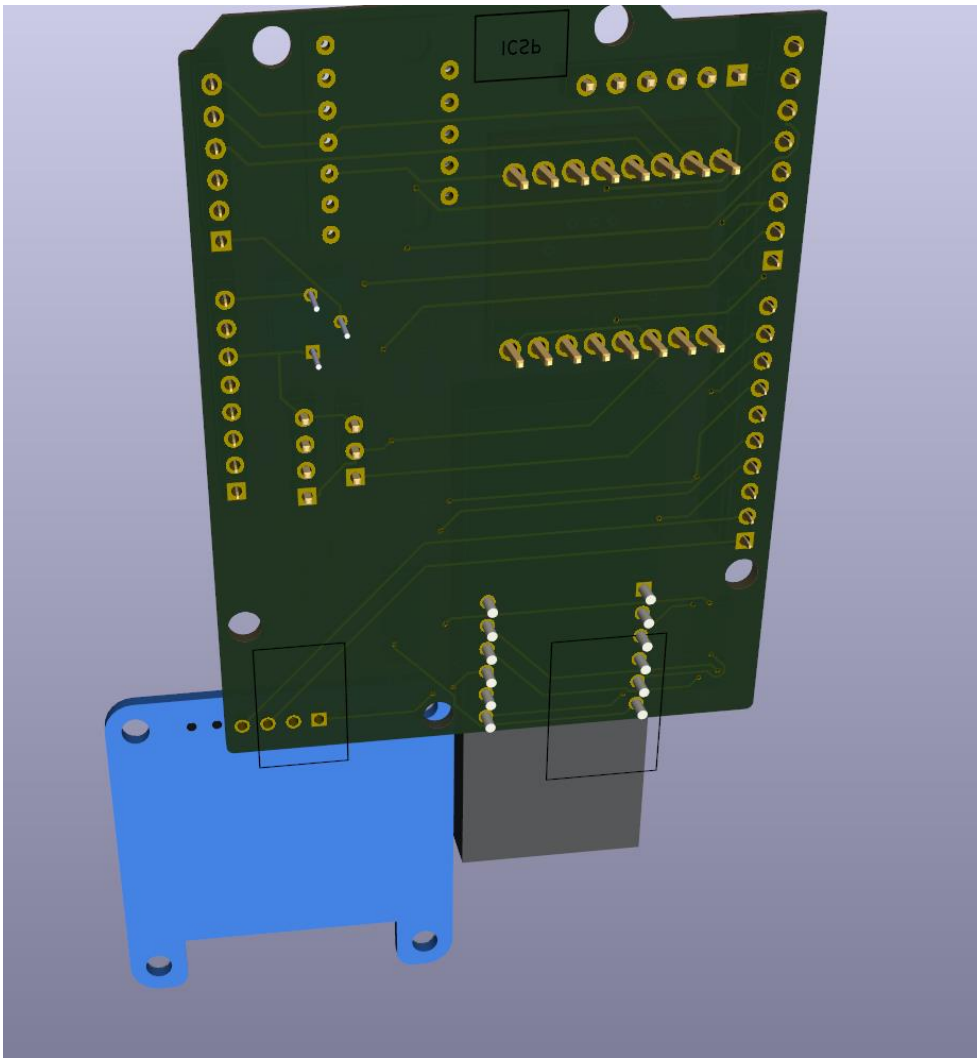

All the connections line up! Hopefully the OLED will survive that single mount! (See Section IV)

III. Implementation

In the implementation, there are some important notes to make. There were not enough PWM pins for everything to have its own signal, but that just meant PD5 had overlapped with just an unimportant LED. There are some 3D models that are just there to give the idea since they were unavailable, such as OLED. Other notes are below images in sections II and IV of this report.

IV. Snapshots of Rules Checkers

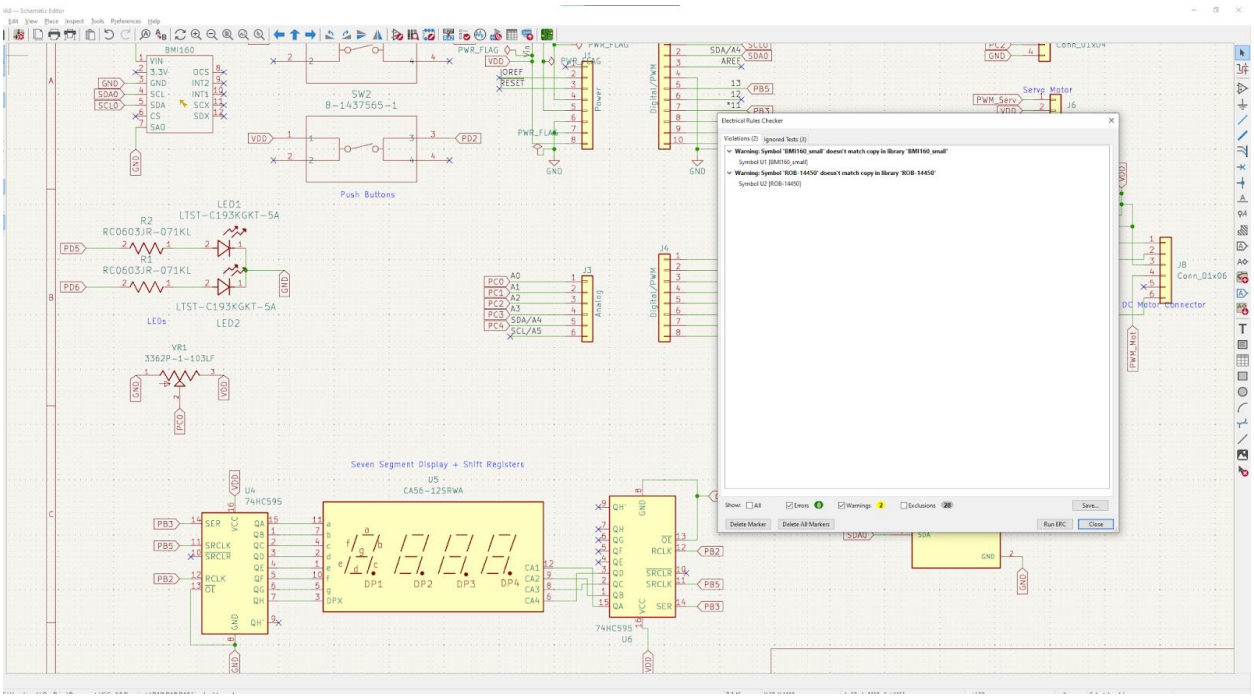

Note that the only warnings are because I changed footprints.

- Excluded warning: Both VDD and Vin are attached to the same items; VDD will be used in the netlist
  - Global Label 'VDD'
  - Label 'Vin'
- Excluded warning: Both PC2 and A2 are attached to the same items; PC2 will be used in the netlist
  - Global Label 'PC2'
  - Label 'A2'
- Excluded warning: Both PC3 and A3 are attached to the same items; PC3 will be used in the netlist
  - Global Label 'PC3'
  - Label 'A3'
- Excluded warning: Both PC0 and A0 are attached to the same items; PC0 will be used in the netlist
  - Global Label 'PC0'
  - Label 'A0'
- Excluded warning: Both PC1 and A1 are attached to the same items; PC1 will be used in the netlist
  - Global Label 'PC1'
  - Label 'A1'
- Excluded warning: Both PD6 and *6 are attached to the same items; PD6 will be used in the netlist
  - Global Label 'PD6'
  - Label '*6'
- Excluded warning: Both PD5 and *5 are attached to the same items; PD5 will be used in the netlist
  - Global Label 'PD5'
  - Label '*5'
- Excluded warning: Both PD2 and 2 are attached to the same items; PD2 will be used in the netlist
  - Global Label 'PD2'
  - Label '2'
- Excluded warning: Both PD3 and *3 are attached to the same items; PD3 will be used in the netlist
  - Global Label 'PD3'
  - Label '*3'

Click

The only exclusions are warnings for pin label types or multiple names on a line (which I wanted for clarity and ensured the right one is used).

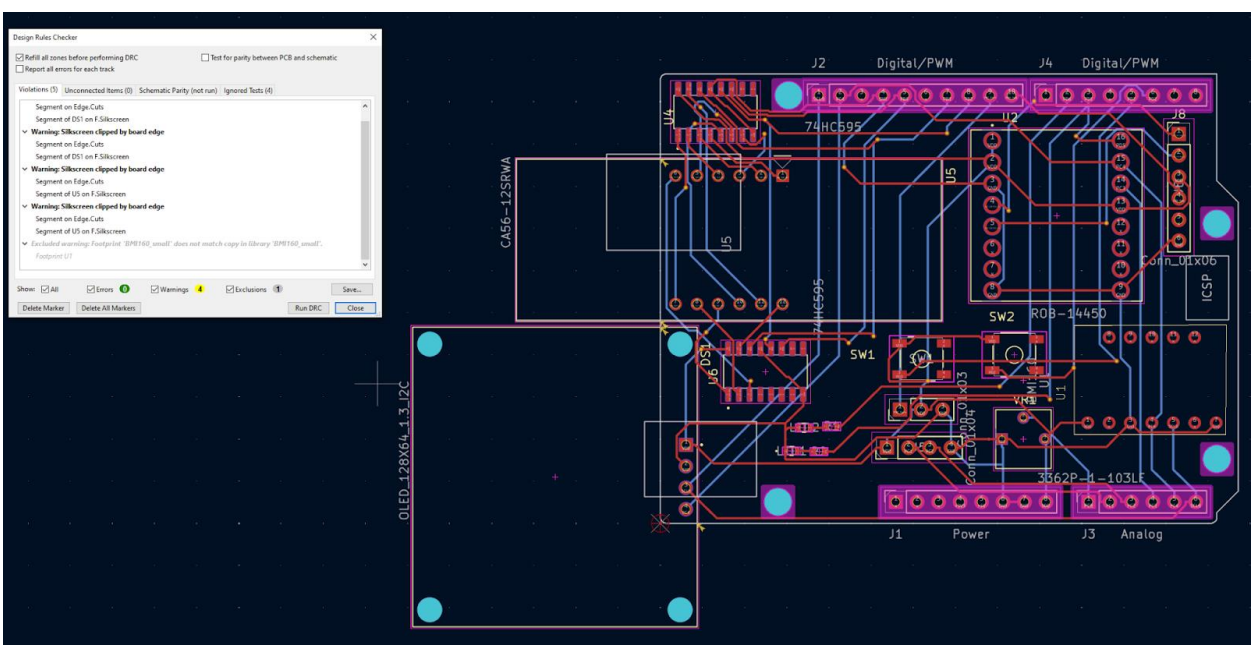

An exclusion for the component's properties being changed, and some warnings because it hangs over PCB (I was instructed to do this, and it is not optional if we wish to have the shield be this small.)

V. Conclusion

This was a great way to learn about PCB design, using 3D models in KiCad, and implementing a device with many functions. One takeaway from this is it takes a long time to form a project like this, even though a lot of the work is already done or actively done by the software.

References

- https://ww1.microchip.com/downloads/en/DeviceDoc/40001906A.pdf
- https://ww1.microchip.com/downloads/en/DeviceDoc/ATmega328PB_Xplained_Mini_Schematics.pdf
- https://mm.digikey.com/Volume0/opasdata/d220001/medias/docus/1168/LTST-C193TGKT-5A.pdf
- https://www.te.com/usa-en/product-8-1437565-1.datasheet.pdf
- https://www.bourns.com/docs/Product-Datasheets/3362.pdf
- https://www.kingbrightusa.com/images/catalog/SPEC/CA56-12SRWA.pdf
- https://kicad.github.io/
- https://www.snapeda.com/parts/ROB-14450/SparkFun%20Electronics/datasheet/