1. COMPONENTS LIST AND CONNECTION BLOCK DIAGRAM w/ PINS

328PB w/ soldered headers
Multi-Functional Shield (7 Seg display)
Servo motor
Ultrasonic distance sensor
Cables
UART connection to PC (over micro usb)

Block diagram:

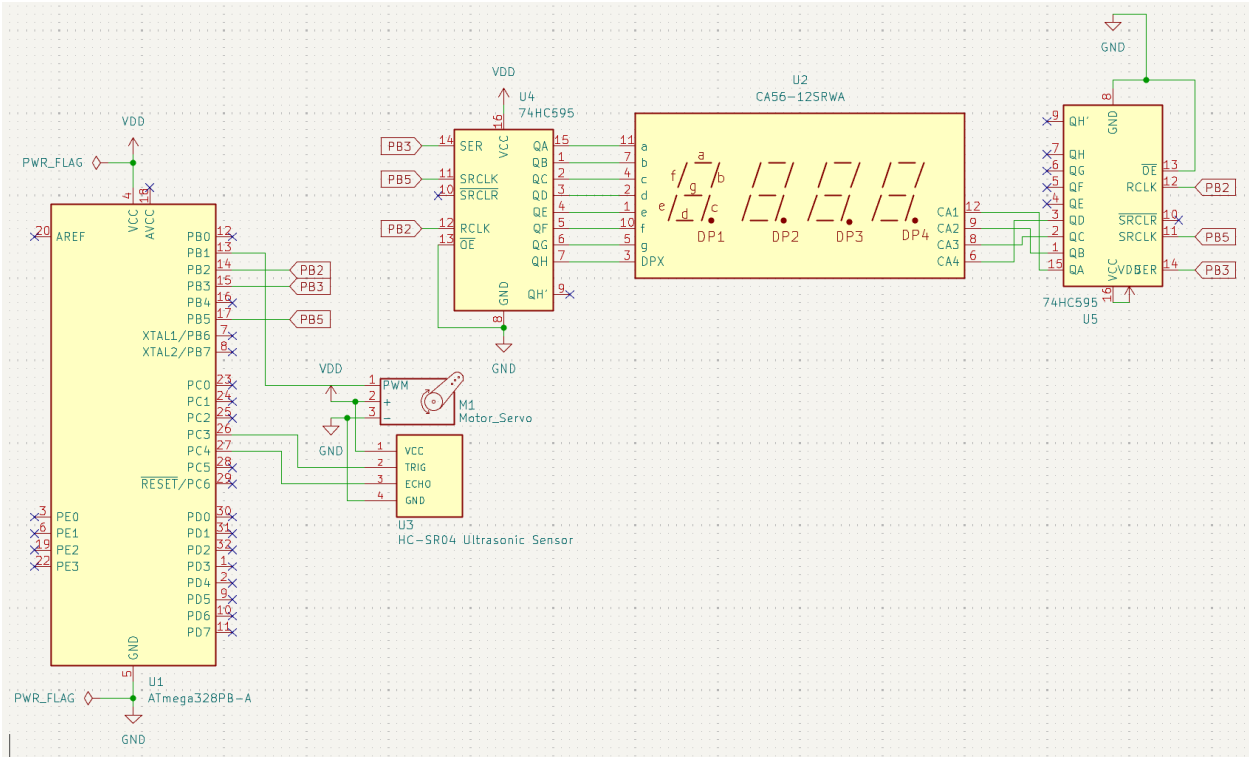

2. SCHEMATICS

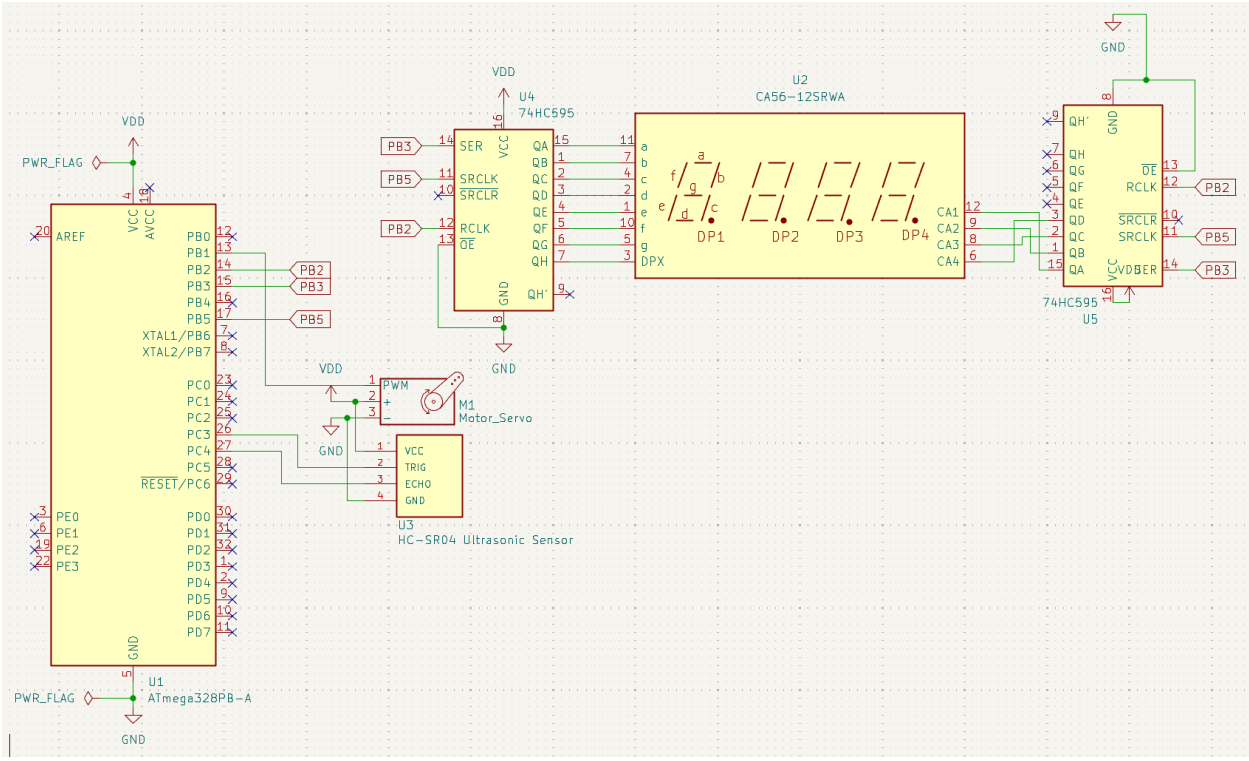

3. SCREENSHOTS OF EACH TASK OUTPUT (ATMEL STUDIO OUTPUT)

Screenshot of Terminal output:

Terminal 6

```
48, 258 (mm)
50, 258 (mm)
52, 258 (mm)
54, 258 (mm)
56, 258 (mm)
58, 259 (mm)
60, 258 (mm)
62, 258 (mm)
64, 258 (mm)
66, 257 (mm)
68, 257 (mm)
70, 257 (mm)
72, 258 (mm)
74, 258 (mm)
76, 258 (mm)
78, 259 (mm)
80, 259 (mm)
```

4. PICTURE OF BOARD SETUP

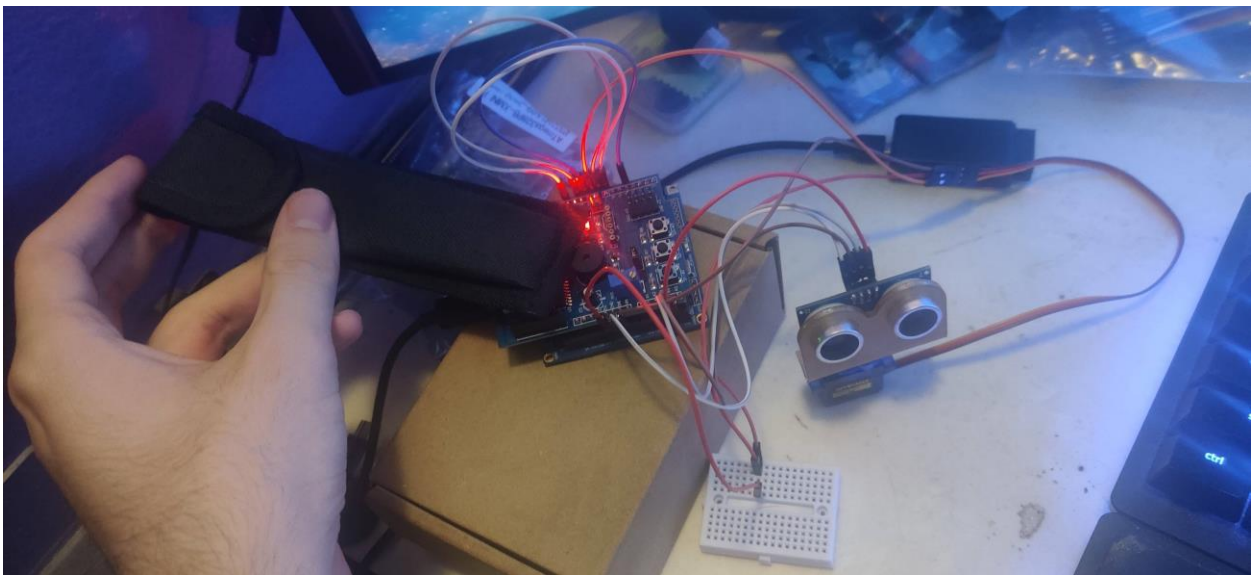

(Covering up lights to reduce glare)