1. COMPONENTS LIST AND CONNECTION BLOCK DIAGRAM w/ PINS

328PB w/ soldered headers
Logic Analyzer
Multi-Functional Shield
Cables

Block diagram:

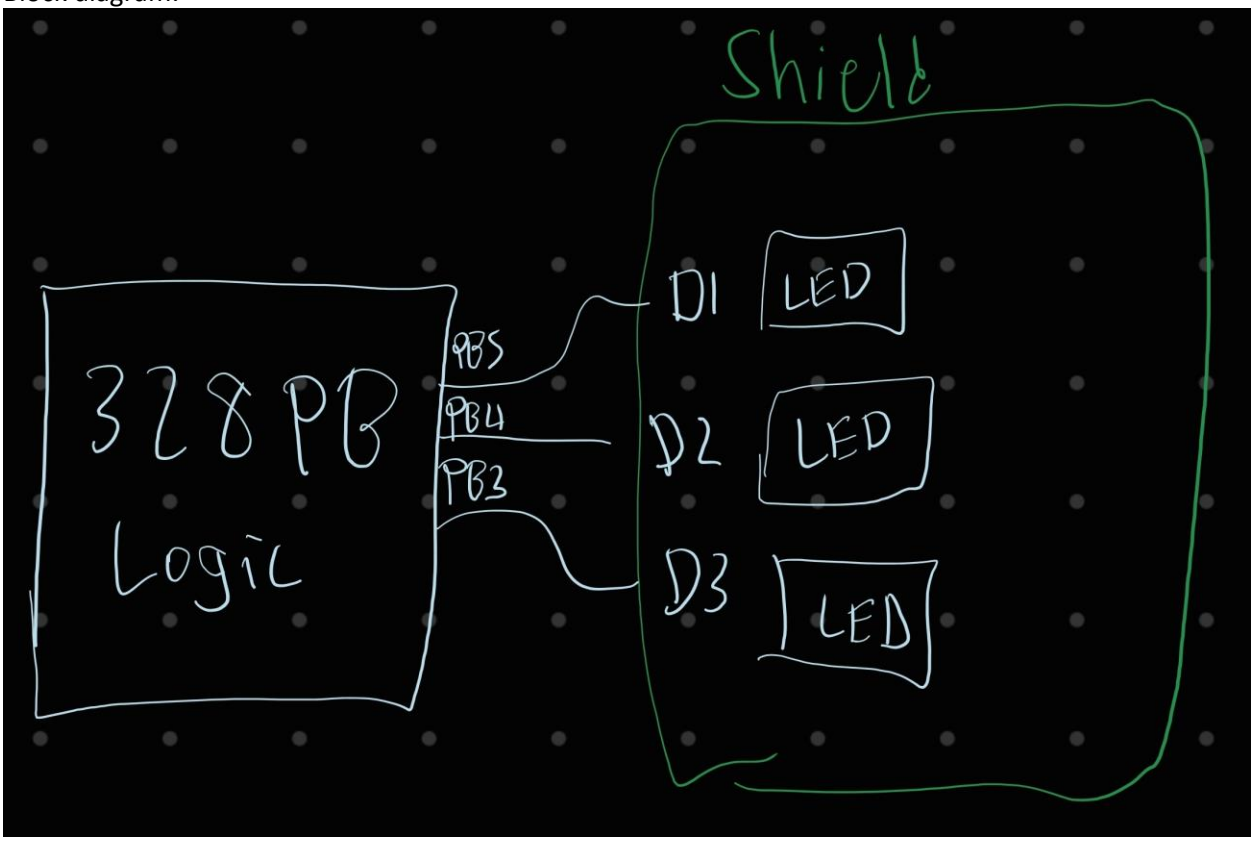

2. SCHEMATICS

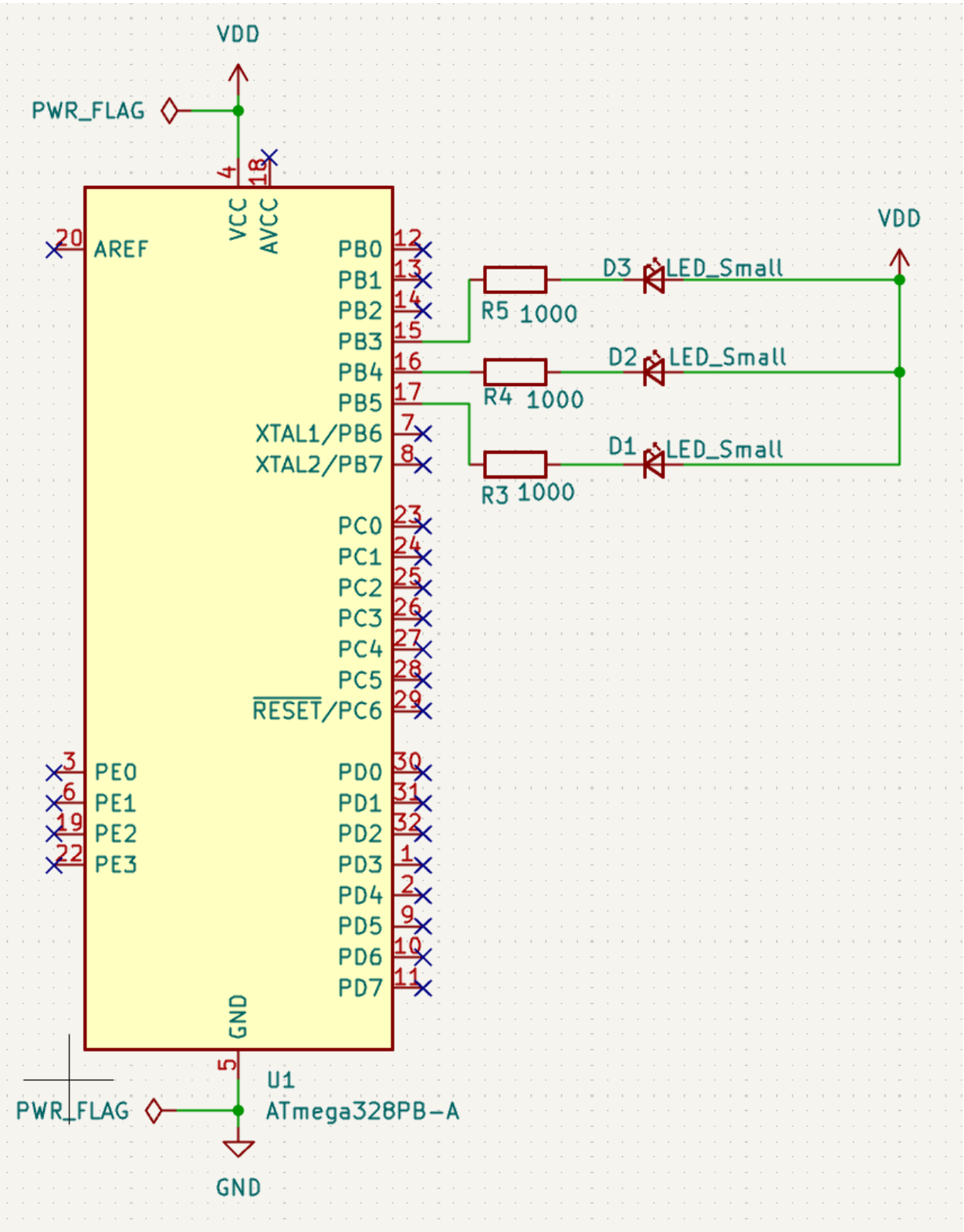

3. SCREENSHOTS OF EACH TASK OUTPUT (ATMEL STUDIO OUTPUT)

No outputs in this assignment, but here's a close look at the logic analysis:

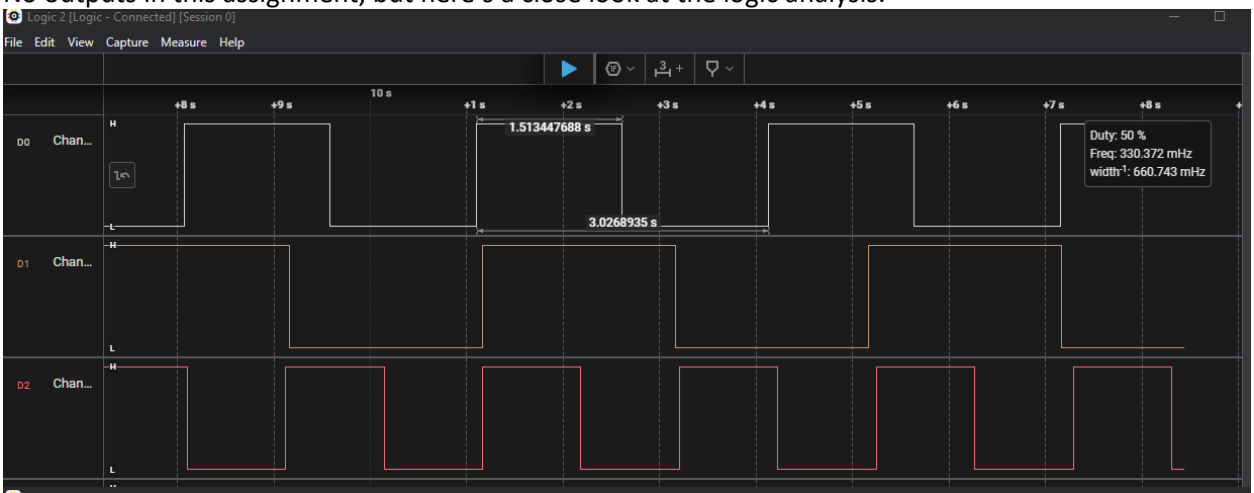

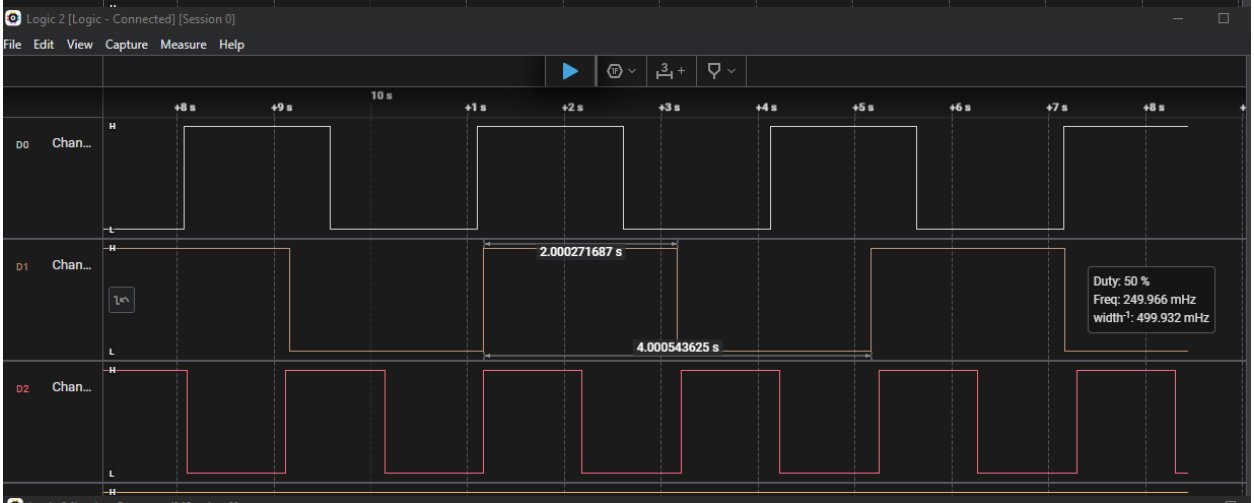

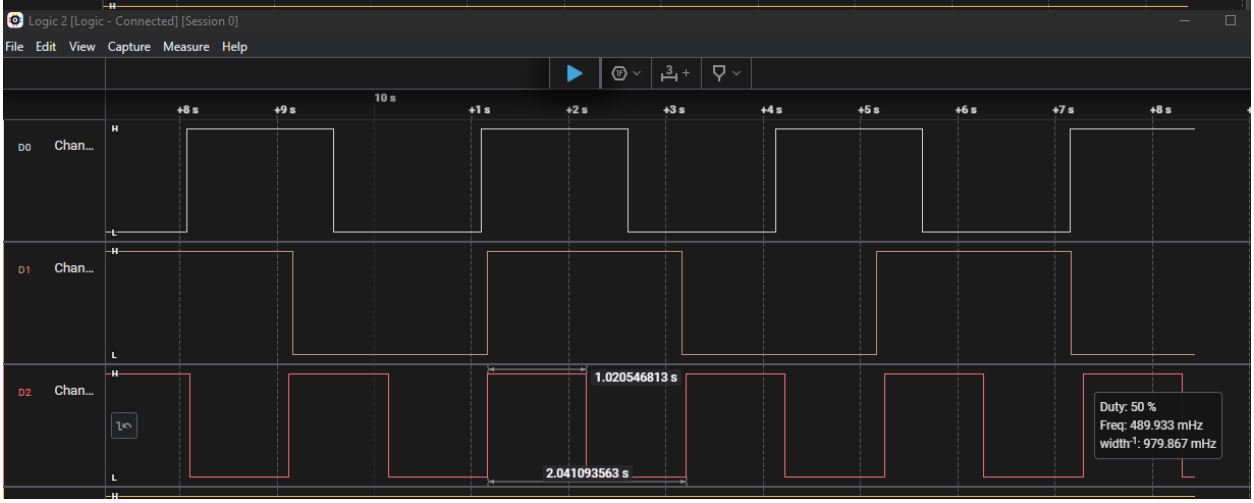

4. SCREENSHOT OF EACH DEMO (BOARD SETUP)
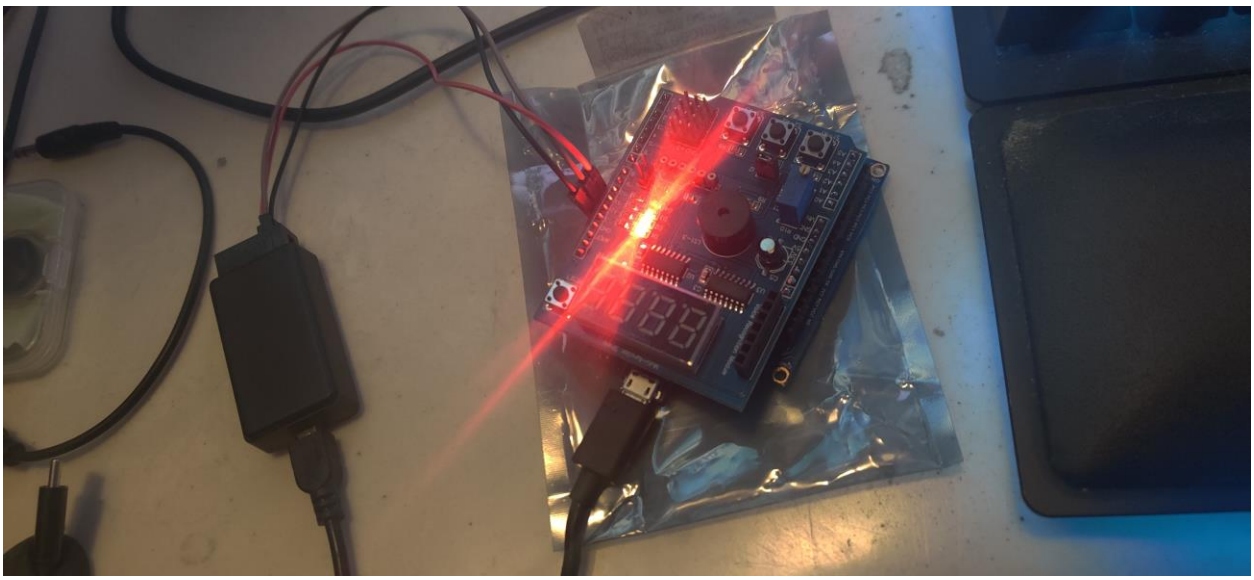
Board is the same for all: