ADC CIRCUIT

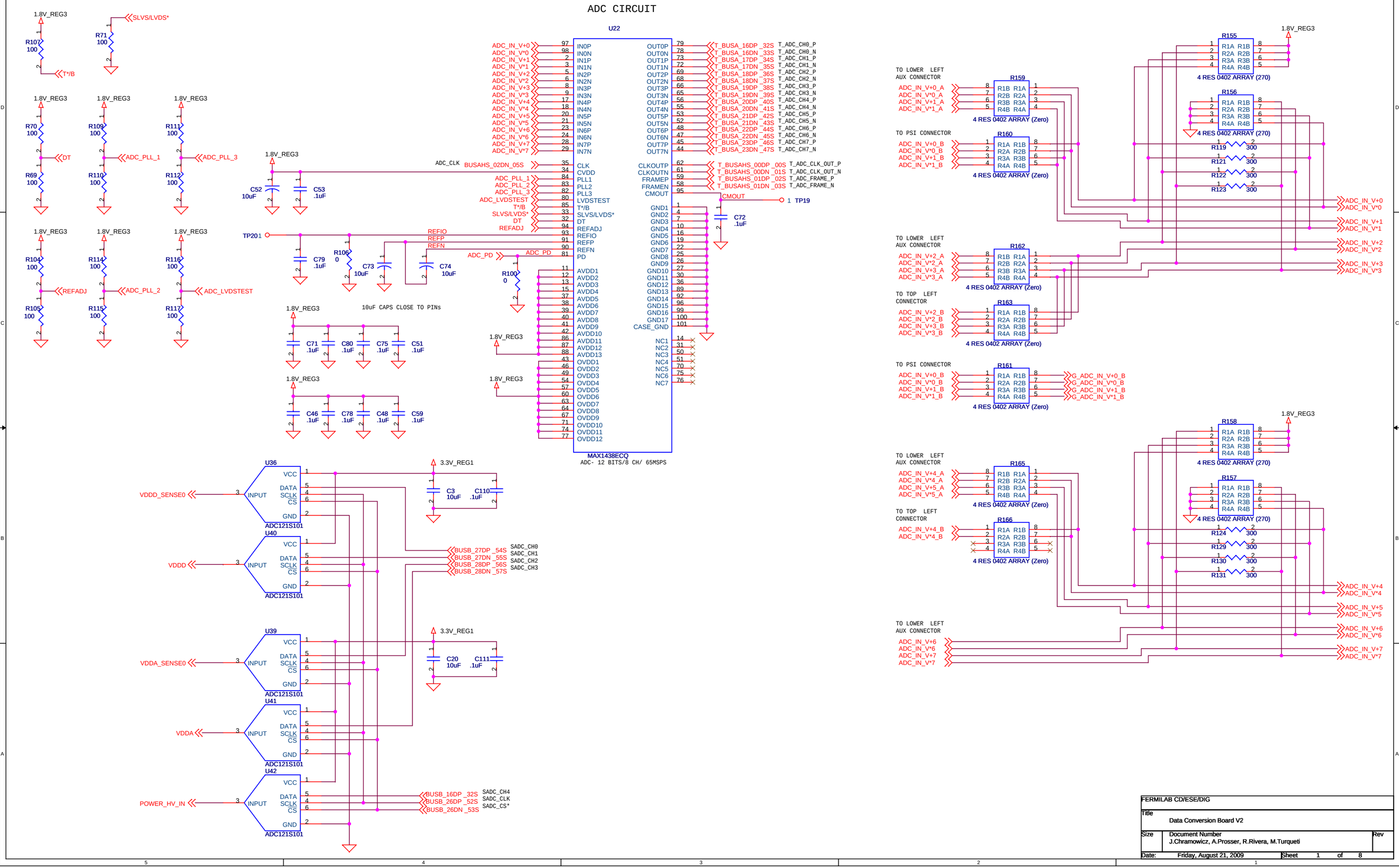

FERMILAB CD/ESE/DIG	
Title	Data Conversion Board V2
Size	Document Number: J.Chramowicz, A.Prosser, R.Rivera, M.Turqueti
Rev	
Date: Friday, August 21, 2009	Sheet 1 of 8

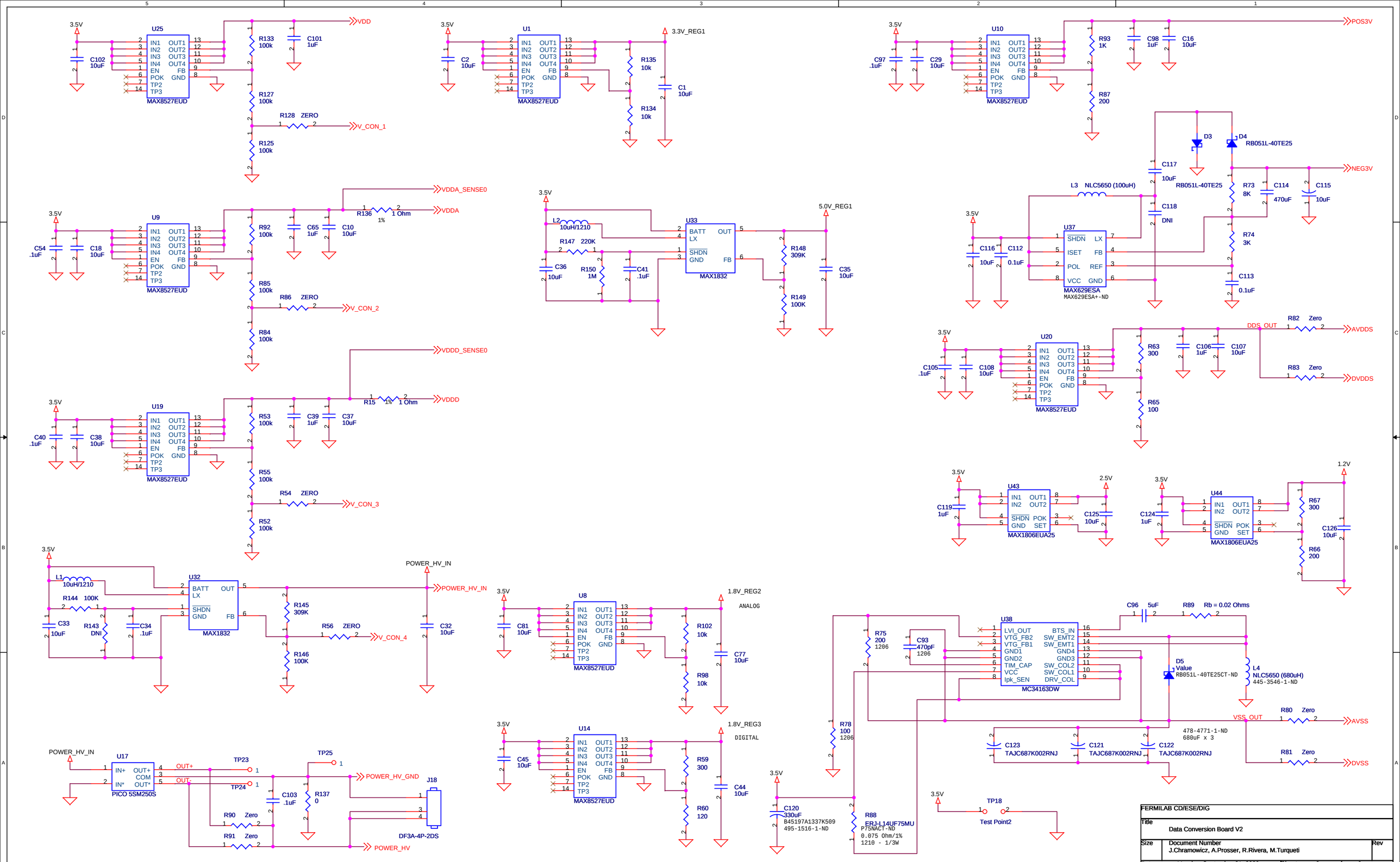
U25
MAX8527EUD
U1
MAX8527EUD
U10
MAX8527EUD
U9
MAX8527EUD
U33
MAX1832
U37
MAX629ESA
MAX629ESA+-ND
U20
MAX8527EUD
U19
MAX8527EUD
U43
MAX1806EUA25
U44
MAX1806EUA25
U32
MAX1832
U8
MAX8527EUD
U38
MC34163DW
U14
MAX8527EUD
U17
PICO 5SM250S
J18
DF3A-4P-2DS
VDD
V_CON_1
VDDA_SENSE0
VDDA
V_CON_2
VDDD_SENSE0
VDDD
V_CON_3
POWER_HV_IN
V_CON_4
POWER_HV_GND
POWER_HV
3.3V_REG1
5.0V_REG1
POS3V
NEG3V
DDS_OUT
AVDDS
DVDDS
1.2V
2.5V
1.8V_REG2
ANALOG
1.8V_REG3
DIGITAL
VSS_OUT
AVSS
DVSS
3.5V
OUT+
OUT-
TP23
TP24
TP25
TP18
Test Point2
D3
D4
RB051L-40TE25
L3 NLC5650 (100uH)
L1 10uH/1210
L2 10uH/1210
D5 Value RB051L-40TE25CT-ND
L4 NLC5650 (680uH) 445-3546-1-ND
478-4771-1-ND 680uF x 3
C123 TAJC687K002RNJ
C121 TAJC687K002RNJ
C122 TAJC687K002RNJ
C120 330uF B45197A1337K509 495-1516-1-ND
R88 ERJ-L14UF75MU P75NACT-ND 0.075 Ohm/1% 1210 - 1/3W
R136 1 Ohm 1%
R15 1 Ohm 1%
R128 ZERO
R86 ZERO
R54 ZERO
R56 ZERO
R90 Zero
R91 Zero
R82 Zero
R83 Zero
R80 Zero
R81 Zero
R89 Rb = 0.02 Ohms
R96 5uF
FERMILAB CD/ESE/DIG
Title
Data Conversion Board V2
Size
Document Number
J.Chramowicz, A.Prosser, R.Rivera, M.Turqueti
Rev
Date: Monday, September 21, 2009
Sheet 2 of 8

DAC/RAMP GEN

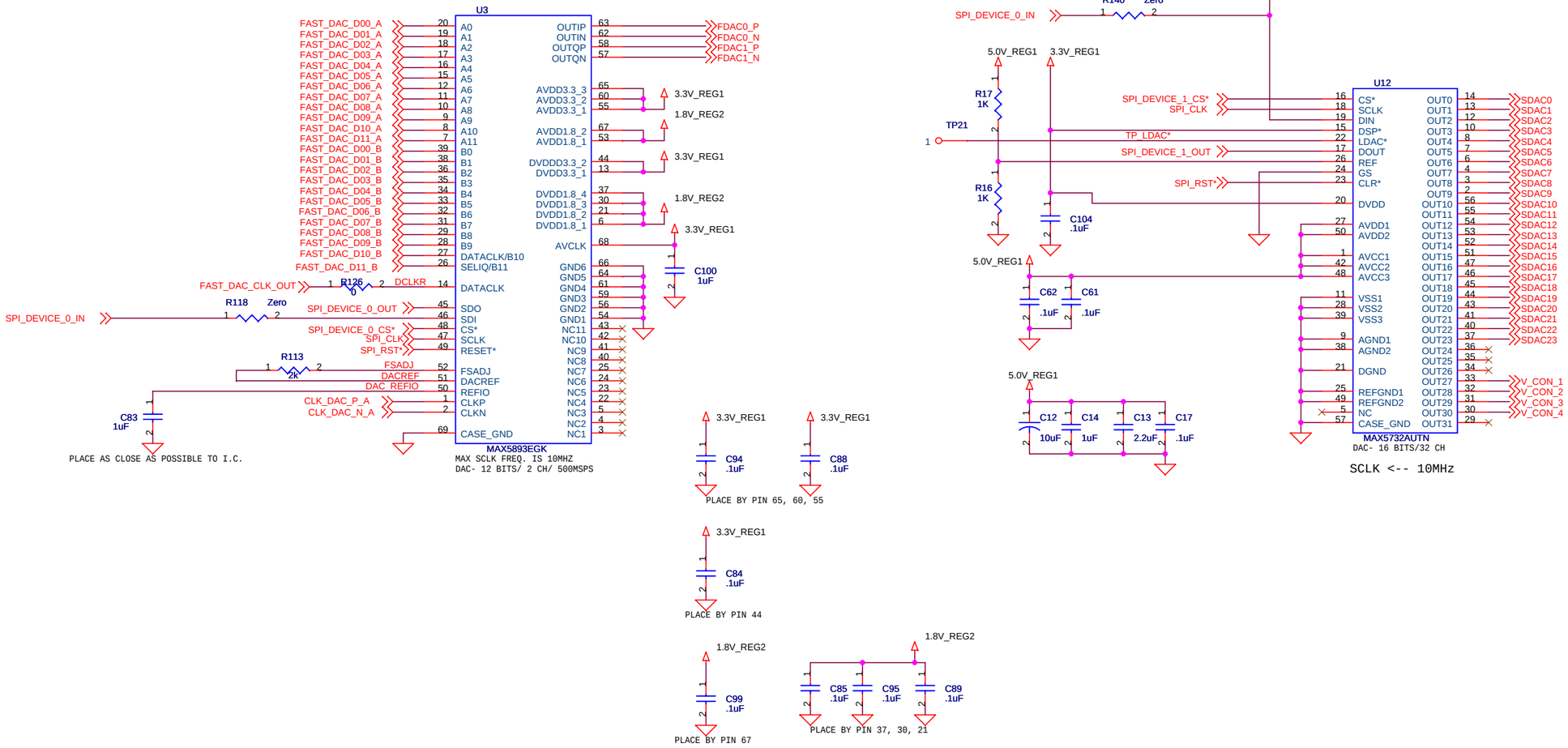

FERMILAB CD/ESE/DIG		
Title: Data Conversion Board V2		
Size	Document Number J.Chramowicz, A.Prosser, R.Rivera, M.Turqueti	Rev
Date: Friday, August 21, 2009	Sheet 3 of 8	

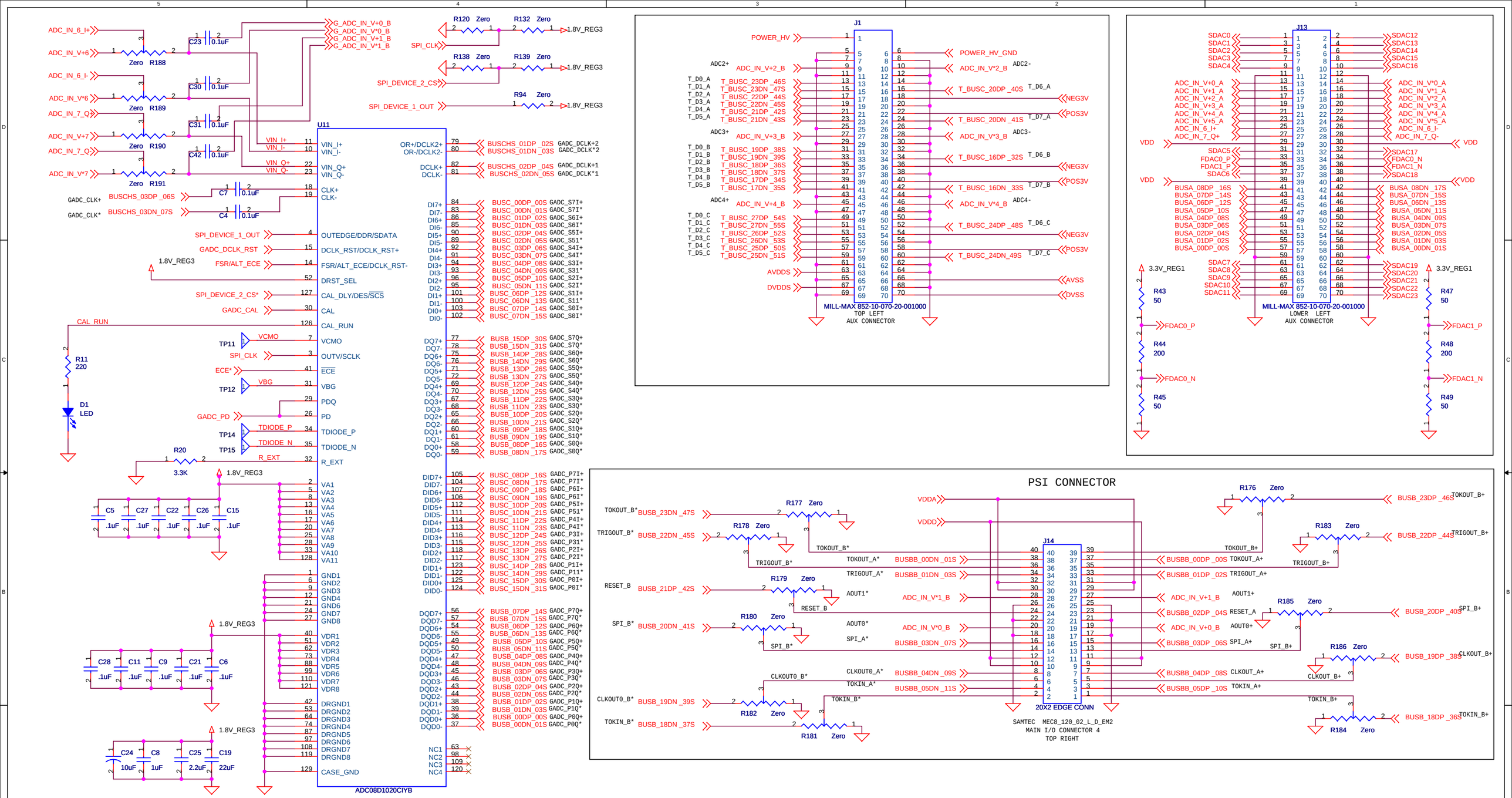

FERMILAB CD/ESE/DIG	
Title	Data Conversion Board V2
Size	Document Number
	J.Chramowicz, A.Prosser, R.Rivera, M.Turqueti
Rev	
Date: Friday, August 21, 2009	Sheet 4 of 8

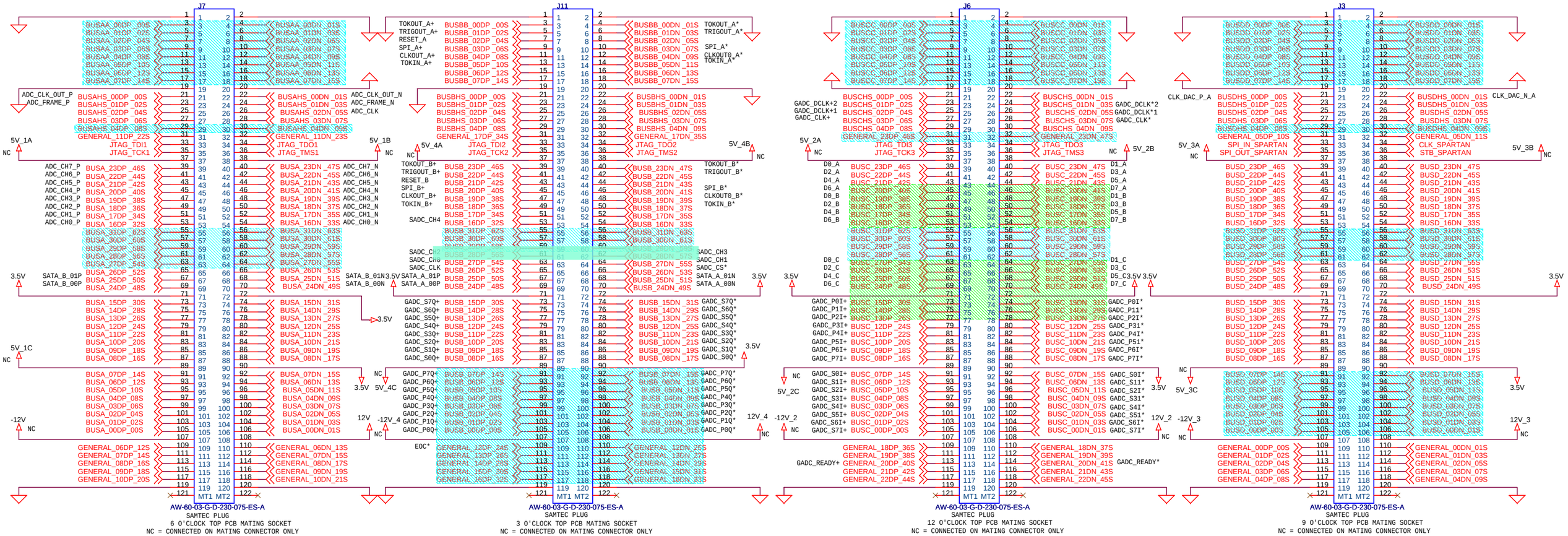

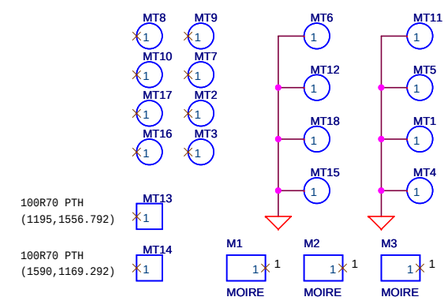

FERMILAB CD/ESE/DIG		
Title: Data Conversion Board V2		
Size	Document Number: J.Chramowicz, A.Prosser, R.Rivera, M.Turqueti	Rev
Date: Friday, August 21, 2009	Sheet 5 of 8	

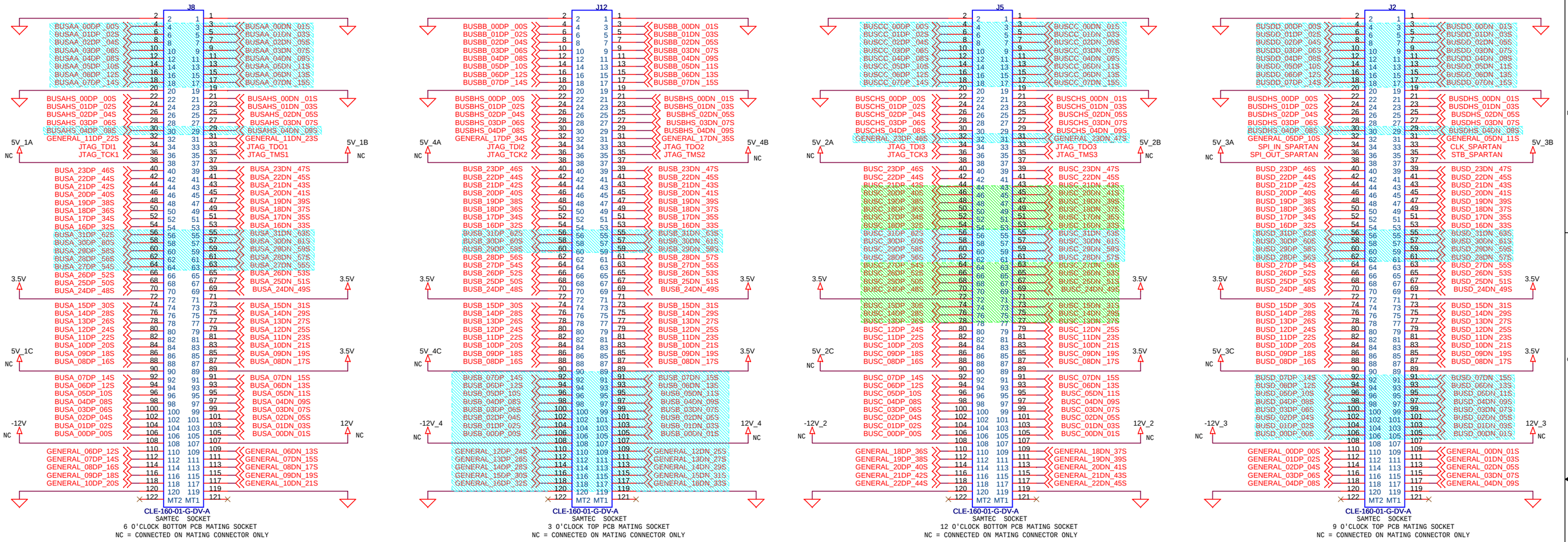

FERMILAB CD/ESE/DIG		
Title: Data Conversion Board V2		
Size	Document Number: J.Chramowicz, A.Prosser, R.Rivera, M.Turqueti	Rev
Date: Friday, August 21, 2009	Sheet 6 of 8	

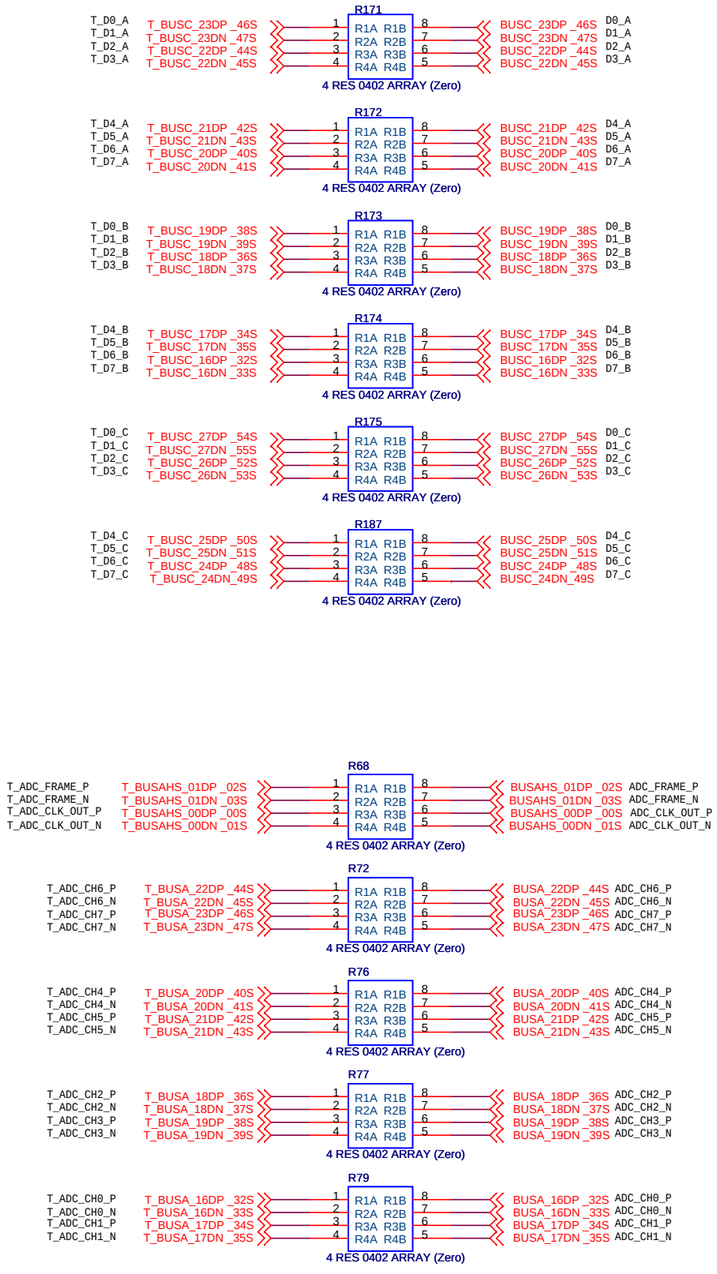

FERMILAB CD/ESE/DIG		
Title: Data Conversion Board V2		
Size	Document Number: J.Chramowicz, A.Prosser, R.Rivera, M.Turqueti	Rev
Date: Friday, August 21, 2009	Sheet 7 of 8	

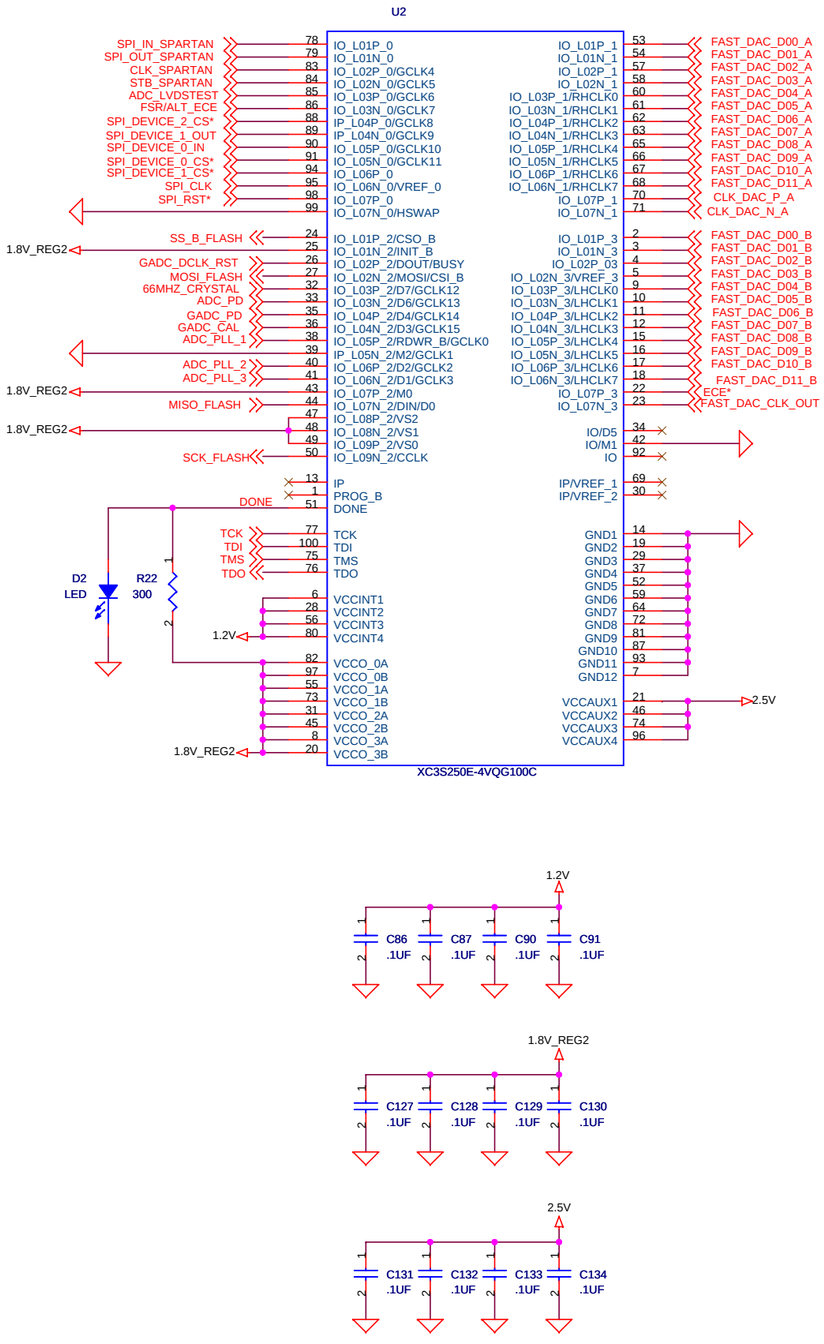

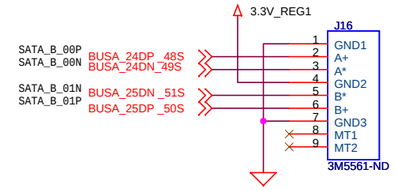

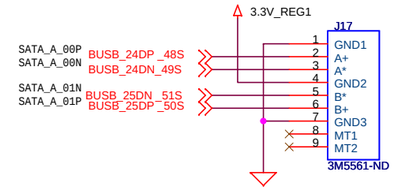

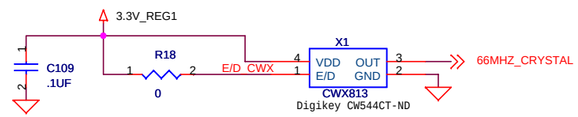

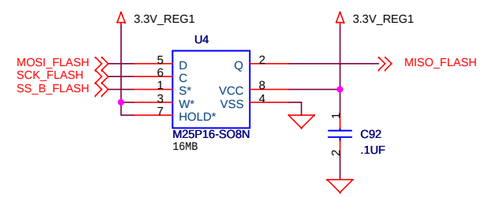

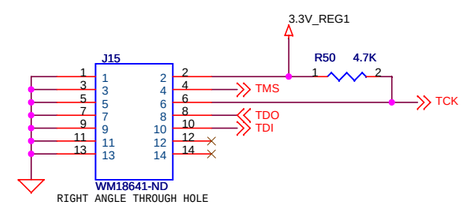

FERMILAB CD/ESE/DIG		
Title: Data Conversion Board V2		
Size	Document Number J.Chramowicz, A.Prosser, R.Rivera, M.Turqueti	Rev
Date: Friday, August 21, 2009	Sheet 8 of 8	