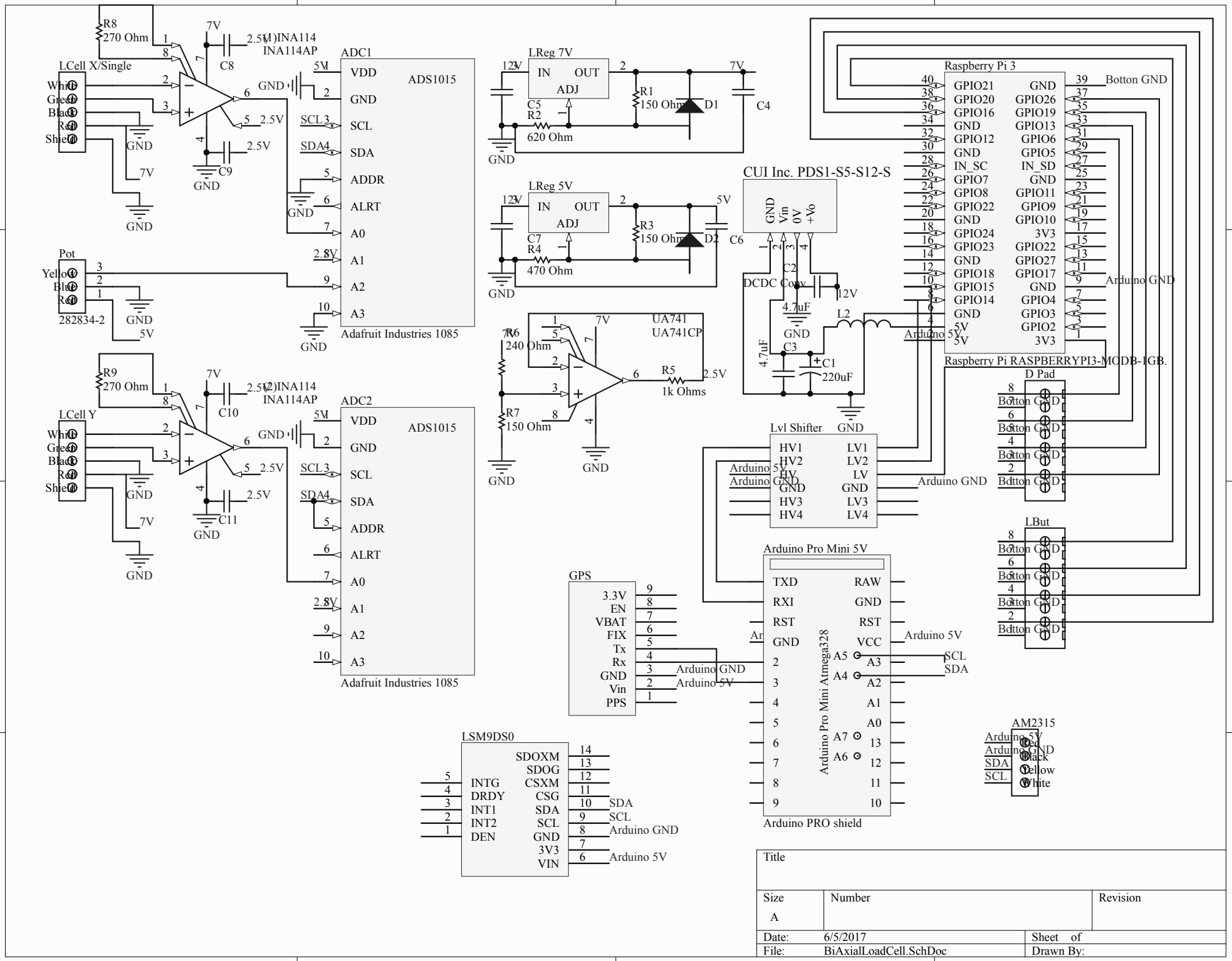
LCell X/Single
White
Green
Black
Red
Shield
R8
270 Ohm
C8
C9
(1)INA114
INA114AP
ADC1
ADS1015
VDD
GND
SCL
SDA
ADDR
ALRT
A0
A1
A2
A3
Adafruit Industries 1085
Pot
Yellow
Blue
Red
282834-2
LCell Y
R9
270 Ohm
C10
C11
(2)INA114
INA114AP
ADC2
ADS1015
Adafruit Industries 1085
LReg 7V
IN
OUT
ADJ
C5
R2
620 Ohm
R1
150 Ohm
D1
C4
LReg 5V
C7
R4
470 Ohm
R3
150 Ohm
D2
C6
UA741
UA741CP
R6
240 Ohm
R7
150 Ohm
R5
1k Ohms
CUI Inc. PDS1-S5-S12-S
GND
Vin
0V
+Vo
C2
DCDC Conv
4.7uF
L2
C3
C1
220uF
Raspberry Pi 3
GPIO21
GPIO20
GPIO16
GND
GPIO12
GND
IN_SC
GPIO7
GPIO8
GPIO22
GND
GPIO24
GPIO23
GND
GPIO18
GPIO15
GPIO14
GND
5V
5V
GND
GPIO26
GPIO19
GPIO13
GPIO6
GPIO5
IN_SD
GND
GPIO11
GPIO9
GPIO10
3V3
GPIO22
GPIO27
GPIO17
GND
GPIO4
GPIO3
GPIO2
3V3
Botton GND
Arduino GND
Arduino 5V
Raspberry Pi RASPBERRYPI3-MODB-1GB.
D Pad
LBut
Lvl Shifter
HV1
HV2
HV
GND
HV3
HV4
LV1
LV2
LV
GND
LV3
LV4
Arduino Pro Mini 5V
TXD
RXI
RST
GND
RAW
GND
RST
VCC
A5
A4
A3
A2
A1
A0
A7
A6
13
12
11
10
Arduino Pro Mini Atmega328
Arduino PRO shield
SCL
SDA
GPS
3.3V
EN
VBAT
FIX
Tx
Rx
GND
Vin
PPS
LSM9DS0
INTG
DRDY
INT1
INT2
DEN
SDOXM
SDOG
CSXM
CSG
SDA
SCL
GND
3V3
VIN
AM2315
Red
Black
Yellow
White
Title
Size
A
Number
Revision
Date: 6/5/2017
Sheet of
File: BiAxialLoadCell.SchDoc
Drawn By:

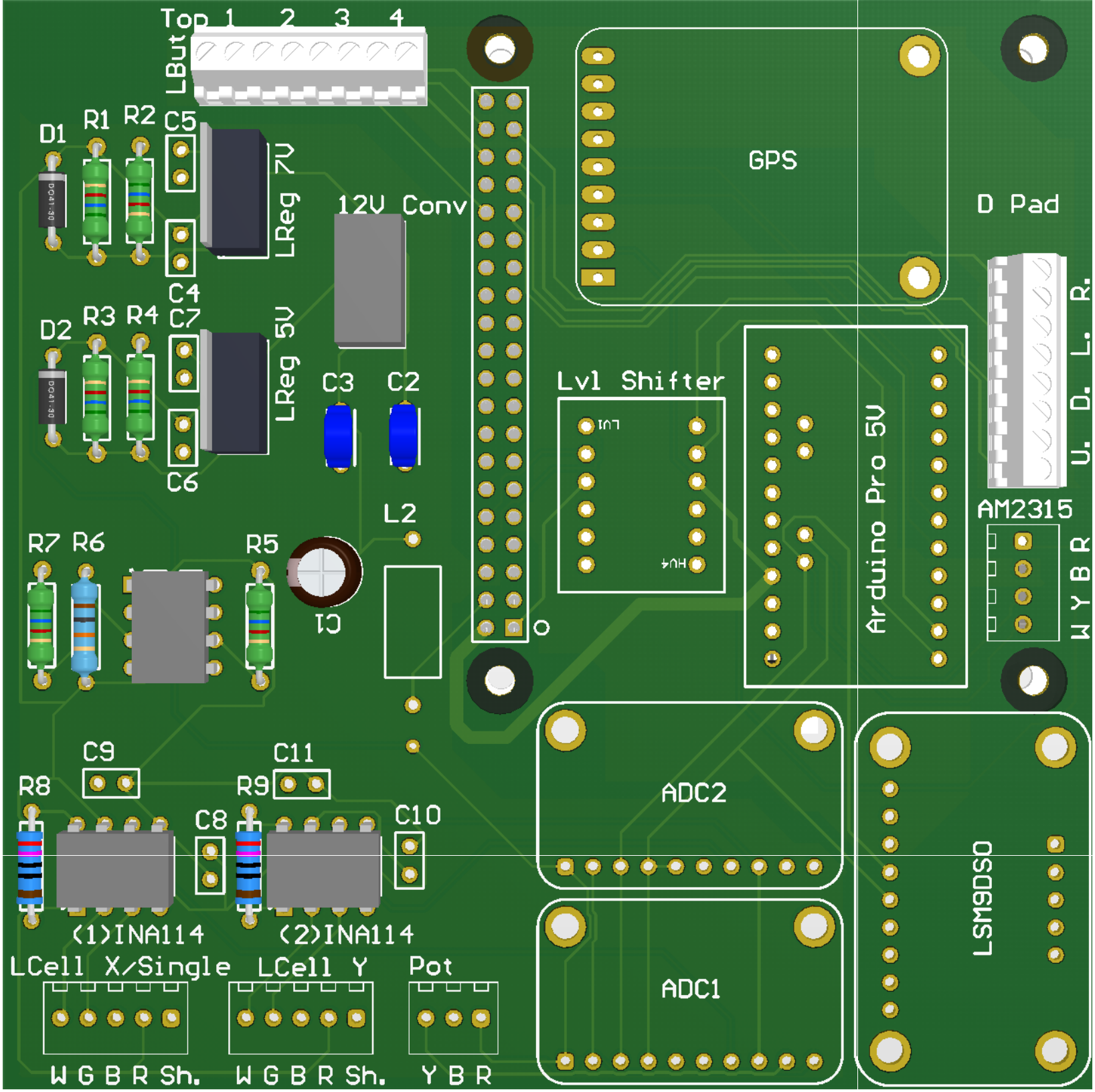
Top 1 2 3 4
LBut
D1
R1
R2
C5
LReg 7V
C4
12V Conv
GPS
D Pad
D2
R3
R4
C7
LReg 5V
C6
C3
C2
Lvl Shifter
LV1
HV4
Arduino Pro 5V
R. L. D. U.
AM2315
W Y B R
L2
R7
R6
R5
C1
C9
C11
R8
R9
C8
C10
ADC2
ADC1
LSM9DS0
(1)INA114
(2)INA114
LCell X/Single
LCell Y
Pot
W G B R Sh.
W G B R Sh.
Y B R

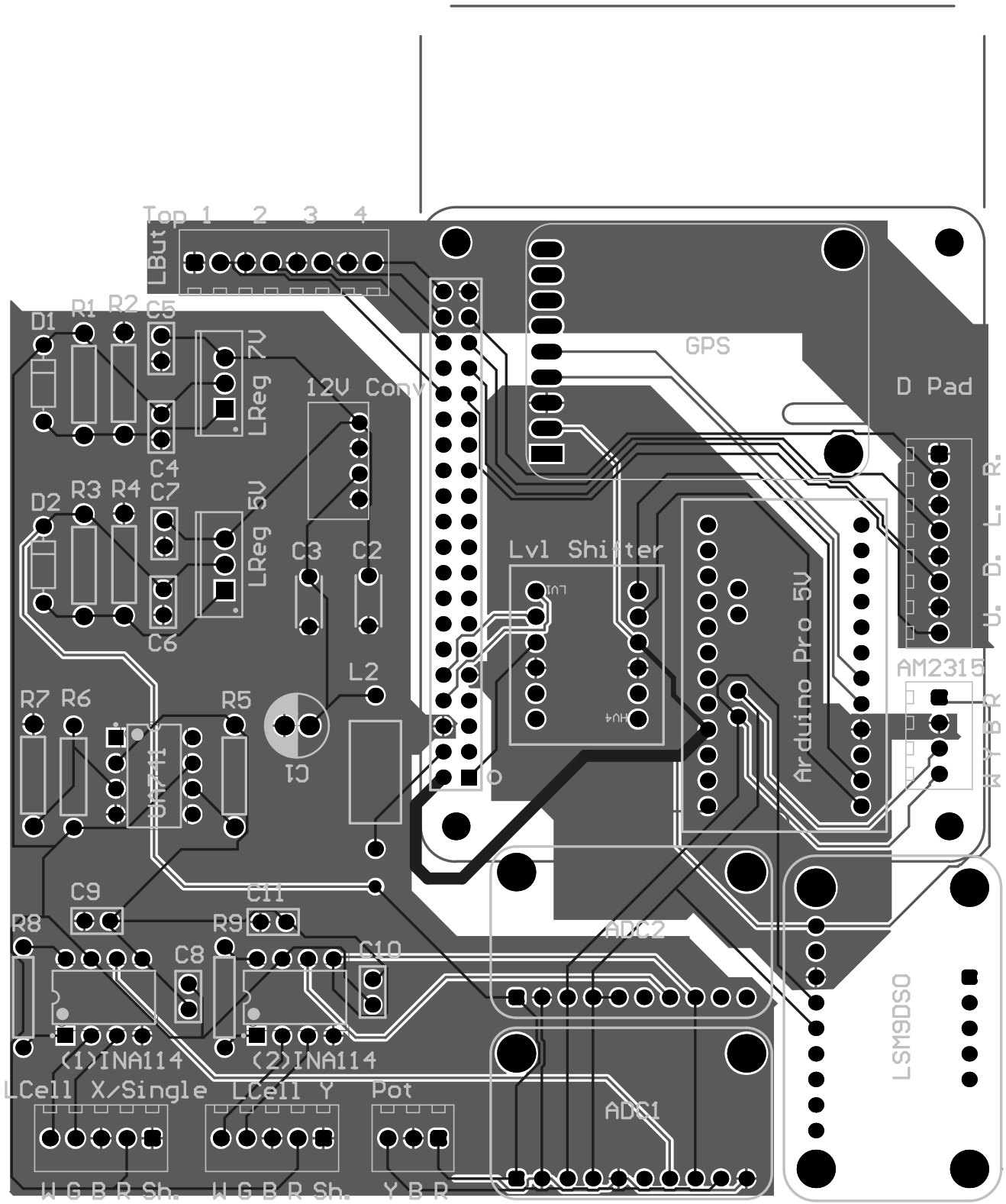
Top 1 2 3 4
LBut
D1 R1 R2 C5
LReg 7V
12V Conv
C4
D2 R3 R4 C7
LReg 5V
C6
C3 C2
L2
R7 R6 R5
SN741
C1
C9 C11
R8 R9
C8 C10
(1)INA114
(2)INA114
LCell X/Single
LCell Y
Pot
W G B R Sh.
W G B R Sh.
Y B R
GPS
Lvl Shifter
LV1
HV4
Arduino Pro 5V
D Pad
U. D. L. R.
AM2315
W Y B R
ADC2
ADC1
LSM9DS0

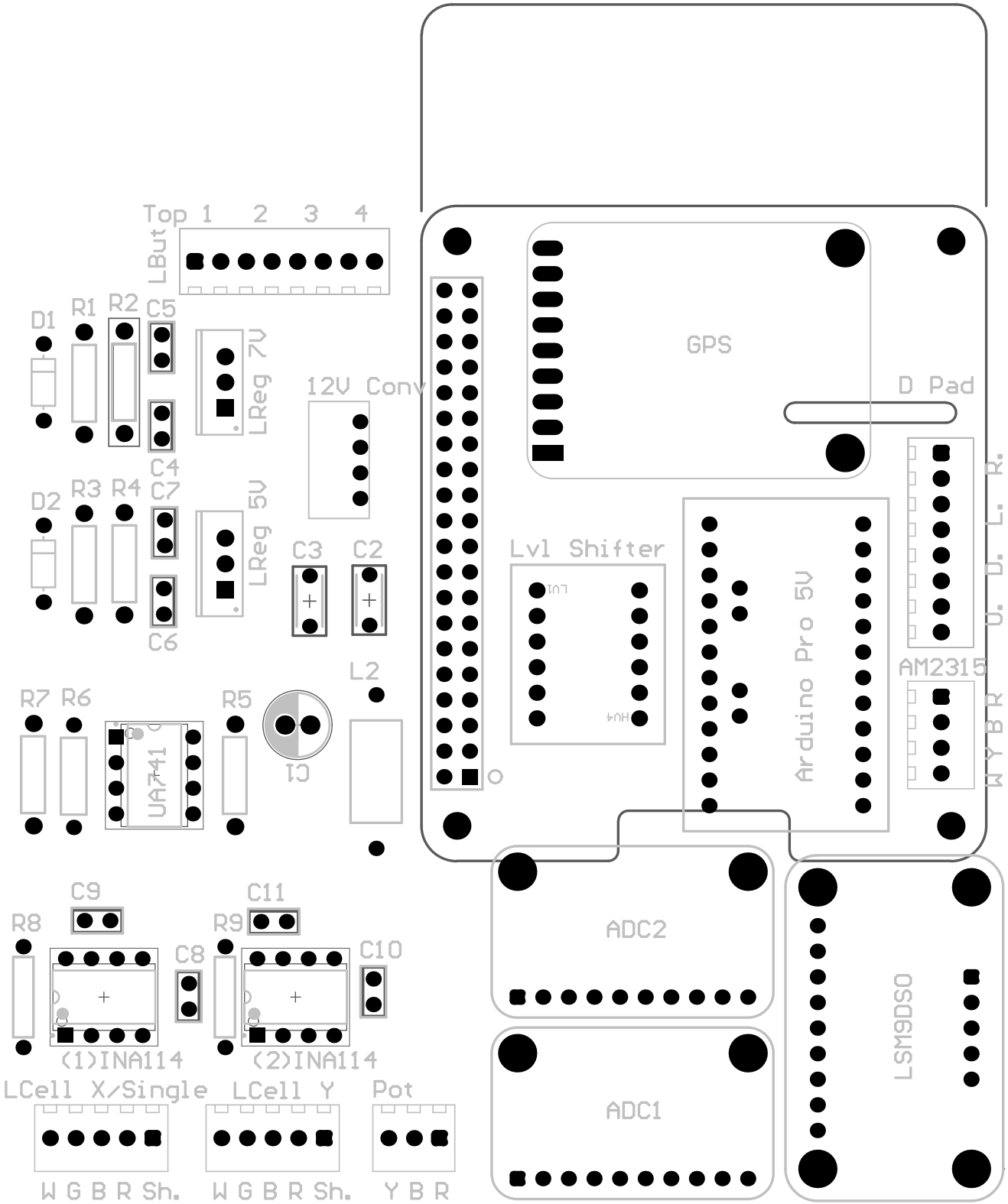
Top 1 2 3 4
LBut
D1
R1
R2
C5
C4
LReg 7V
12V Conv
D2
R3
R4
C7
C6
LReg 5V
C3
C2
R7
R6
UA741
R5
C1
L2
C9
R8
C8
C11
R9
C10
(1)INA114
(2)INA114
LCell X/Single
LCell Y
Pot
W G B R Sh.
W G B R Sh.
Y B R
GPS
D Pad
Lvl Shifter
Arduino Pro 5V
AM2315
U. D. L. R.
W Y B R
ADC2
ADC1
LSM9DS0