ELECTRICAL SYMBOL LIST

NOTE: This is a standard symbol list and not all items listed may be used.

Abbreviations

ANSI	AMERICAN NATIONAL STANDARDS INSTITUTE
AWG	AMERICAN WIRE GAUGE
A	AMPERES, AMBER
AHJ	AUTHORITY HAVING JURISDICTION
AIC	AVAILABLE INTERRUPTING CAPACITY
CA	CABLE
CAT	CATEGORY
CLG	CEILING
C	CONDUIT, CLOSE, CONTROL
CU	COPPER
(X)	DEMOLISH
DTL	DETAIL
DIA	DIAMETER
DIV	DIVISION
DN	DOWN
DWG	DRAWING
EA	EACH
EMT	ELECTRICAL METALLIC TUBING
E	EMERGENCY
EF	EXHAUST FAN
(E)	EXISTING TO REMAIN
FF	FINISH FLOOR
FMC	FLEXIBLE METAL CONDUIT
FT	FOOT, FEET
G, GND	GROUND
GFCI	GROUND FAULT CIRCUIT INTERRUPTER
HT	HEIGHT
ID	IDENTIFICATION
IN	INCH, INCHES
IEEE	INSTITUTE OF ELECTRICAL AND ELECTRONICS ENGINEERS
KV	KILOVOLT
KVA	KILOVOLT AMPERES
KW	KILOWATT
LED	LIGHT EMITTING DIODE
LFMC	LIQUIDTIGHT FLEXIBLE METAL CONDUIT
LV	LOW VOLTAGE
MOCP	MAXIMUM OVERCURRENT PROTECTION
MIN	MINIMUM
MISC	MISCELLANEOUS
MT, MTD	MOUNT, MOUNTED
NEC	NATIONAL ELECTRIC CODE
NESC	NATIONAL ELECTRIC SAFETY CODE
NEMA	NATIONAL ELECTRICAL MANUFACTURERS ASSOCIATION
N	NEUTRAL
(N)	NEW
N/A	NOT APPLICABLE
N.I.C.	NOT IN CONTRACT
NTS	NOT TO SCALE
OC	ON CENTER
PNL	PANEL
PH	PHASE
PVC	POLY-VINYL-CHLORIDE
PWR	POWER
QTY	QUANTITY
REF	REFERENCE
RM	ROOM
SHT	SHEET
SIM	SIMILAR
STD	STANDARD
SWBD	SWITCHBOARD
XFMR	TRANSFORMER
TYP	TYPICAL
UG	UNDERGROUND
UL	UNDERWRITERS LABORATORIES
UON	UNLESS OTHERWISE NOTED
V	VOLTS, VOLTAGE
WP	WEATHERPROOF
W/	WITH
W/O	WITHOUT

Connections / Equipment

- MOTOR CONNECTION
- NON-FUSED DISCONNECT SWITCH
- TRANSFORMER

General

- DETAIL NUMBER AND SHEET LOCATION
- EQUIPMENT IDENTIFICATION
- KEYED NOTE
- DEMOLISH
- EXISTING WORK
- NEW WORK

Lighting

- EXIT SIGN CEILING MOUNTED, ARROW(S) INDICATES DIRECTION IF SHOWN
- EXIT SIGN WALL MOUNTED, ARROW(S) INDICATES DIRECTION IF SHOWN
- RECESSED LUMINAIRE
- RECESSED LUMINAIRE CONNECTED TO EMERGENCY/LIFE SAFETY CIRCUIT OR WITH INTEGRAL OR REMOTE EMERGENCY BATTERY CONNECTED TO UNSWITCHED CIRCUIT
- SURFACE MOUNTED OR PENDANT MOUNTED LINEAR LUMINAIRE
- WALL MOUNTED LUMINAIRE
- WALL MOUNTED LUMINAIRE CONNECTED TO EMERGENCY/LIFE SAFETY CIRCUIT OR WITH INTEGRAL EMERGENCY BATTERY CONNECTED TO UNSWITCHED CIRCUIT
- AREA BOLLARD LUMINAIRE WITH CONCRETE BASE
- AREA LUMINAIRE ARM MOUNTED WITH POLE AND CONCRETE BASE. NUMBER OF HEADS AND CONFIGURATION INDICATED ON PLANS.

Miscellaneous

#10
B-27,29,31.

BRANCH CIRCUIT WIRING. ARROW INDICATES HOME RUN TO PANEL WITH CIRCUITS AS NOTED. WIRE SIZE IS #12 AWG MINIMUM UNLESS NOTED OTHERWISE. SHORT TICK MARKS INDICATE PHASE CONDUCTORS. LONG TICK MARKS INDICATE NEUTRAL CONDUCTORS. A SINGLE CURVED TICK MARK INDICATES INSULATED GREEN GROUND CONDUCTOR. SECOND CURVED TICK MARK INDICATES "ISOLATED GROUND" (GREEN INSULATION WITH YELLOW STRIPE) CONDUCTOR.

- BRANCH PANEL
- CIRCUIT BREAKER
- DRY TYPE TRANSFORMER
- MAIN DISTRIBUTION PANEL / SUB DISTRIBUTION PANEL

Raceways

- CONDUIT CONCEALED IN WALL OR CEILING SPACE
- CONDUIT ROUTED BELOW FLOOR / GRADE
- CONDUIT/WIRING CONTINUATION
- CONDUIT/WIRING STUBBED OUT WITH END CAP OR INSULATED PLASTIC BUSHING
- FLEXIBLE CONDUIT

Switches and Receptacles

DUPLEX RECEPTACLE (MULTIPLE LETTERS INDICATE MULTIPLE OPTIONS)
A = ABOVE COUNTER
G = GROUND FAULT CIRCUIT INTERRUPTER
R1 = HALF SWITCHED BY OCCUPANCY SENSOR RELAY
W = WEATHERPROOF CONTINUOUS USE COVER, GFCI PROTECTED, WITH WEATHER-RESISTANT RECEPTACLE

DOUBLE DUPLEX RECEPTACLE. SEE LETTER CODE LIST AT DUPLEX RECEPTACLE FOR OPTIONS

CEILING MOUNTED OCCUPANCY SENSOR
P = PASSIVE INFRARED
D = DUAL TECHNOLOGY
v (LOWERCASE) = VACANCY CONTROL DESIGNATION

WALL MOUNTED OCCUPANCY SENSOR/SWITCH
S = PASSIVE INFRARED WITH INTEGRAL "OFF" SWITCH
D = PASSIVE INFRARED WITH INTEGRAL DIMMER TO OFF.
v (LOWERCASE) = VACANCY CONTROL DESIGNATION

PHOTO ELECTRIC SWITCH
D = CONTINUOUS DIMMING PHOTOCELL
S = SWITCHED PHOTOCELL

SINGLE POLE SWITCH
a THRU z (LOWERCASE) = LUMINAIRE CONTROL DESIGNATION
D = DIMMER
V = LOW VOLTAGE SWITCH

GENERAL ELECTRICAL NOTES

A. DO NOT COMMENCE INSTALLATION OF ELECTRICAL SYSTEMS AND EQUIPMENT WITHOUT RELATED SHOP DRAWING APPROVALS.

B. SCHEDULE WORK IN EXISTING BUILDINGS WITH THE OWNER. MINIMIZE DISRUPTION OF NORMAL OPERATIONS.

C. VISIT THE SITE BEFORE SUBMITTING A BID TO OBSERVE EXISTING CONDITIONS.

D. ELECTRICAL CIRCUITS SHALL BE INTERRUPTED ONLY WITH PRIOR WRITTEN CONSENT. SUCH INTERRUPTIONS SHALL BE PRECEDED BY ALL POSSIBLE PREPARATIONS BY THE CONTRACTOR WHICH ARE NECESSARY TO KEEP THE ELECTRICAL CIRCUITS OFF FOR A MINIMUM PERIOD IN AN EXPEDITIOUS MANNER PURSUANT WITH GOOD WORKMANSHIP. THIS INCLUDES CIRCUIT TRACING TO IDENTIFY THE ELECTRICAL LOAD BEING SERVED AND THE ORIGIN OF THE CIRCUIT.

E. COORDINATE WITH OWNER SO THAT WORK CAN BE SCHEDULED NOT TO INTERRUPT OPERATIONS, NORMAL ACTIVITIES, BUILDING ACCESS, ACCESS TO DIFFERENT AREAS. THE OWNER WILL COOPERATE TO THE BEST OF THEIR ABILITY TO ASSIST IN A COORDINATED SCHEDULE BUT WILL REMAIN THE FINAL AUTHORITY AS TO TIME OF WORK PERMITTED.

F. COORDINATE THE EXACT LOCATION OF EXISTING UTILITIES AND EQUIPMENT PRIOR TO COMMENCEMENT OF WORK. COMPENSATE THE OWNER FOR DAMAGES CAUSED BY THE FAILURE TO LOCATE AND PRESERVE UTILITIES. REPLACE DAMAGED ITEMS WITH NEW MATERIAL TO MATCH EXISTING.

G. REMOVE EXISTING LUMINAIRES, SWITCHES, RECEPTACLES, AND OTHER ELECTRICAL EQUIPMENT AND DEVICES AND ASSOCIATED WIRING FROM WALLS, CEILINGS, FLOORS, AND OTHER SURFACES SCHEDULED FOR REMODELING, RELOCATION, OR DEMOLITION UNLESS SHOWN AS RETAINED OR RELOCATED ON DRAWINGS.

H. PROVIDE TEMPORARY WIRING AND CONNECTIONS TO MAINTAIN ELECTRICAL CONTINUITY OF EXISTING SYSTEMS DURING CONSTRUCTION. REMOVE OR RELOCATE ELECTRICAL BOXES, CONDUIT, WIRING, EQUIPMENT, LUMINAIRES, AND THE LIKE, AS REQUIRED IN REMOVED OR REMODELED AREAS IN THE EXISTING CONSTRUCTION AFFECTED BY THIS WORK.

I. REMOVE AND RESTORE WIRING WHICH SERVES USABLE EXISTING OUTLETS CLEAR OF THE CONSTRUCTION OR DEMOLITION.

J. IF EXISTING JUNCTION BOXES WILL BE MADE INACCESSIBLE, OR IF ABANDONED OUTLETS SERVE AS FEED THROUGH BOXES FOR OTHER EXISTING ELECTRICAL EQUIPMENT WHICH IS BEING RETAINED, PROVIDE NEW CONDUIT AND WIRE TO BYPASS THE ABANDONED OUTLETS.

K. IF EXISTING CONDUITS PASS THROUGH PARTITIONS OR CEILING WHICH ARE BEING REMOVED OR REMODELED, PROVIDE NEW CONDUIT AND WIRE TO REROUTE CLEAR OF THE CONSTRUCTION OR DEMOLITION AND MAINTAIN SERVICE TO THE EXISTING LOAD.

L. CONCEALED CONDUIT LOCATED IN CONCRETE WALLS OR HARDBOARD CEILING SPACES MAY BE ABANDONED IN PLACE. REMOVE CONDUCTORS AND TAG ABANDONED CONDUITS WITH CORRESPONDING SYSTEM AND TERMINATION POINT. CUT AND CAP ABANDONED CONDUIT. DO NOT EXTEND STUBS ABOVE FINISHED FLOOR.

M. EXTEND CIRCUITING AND DEVICES IN EXISTING WALLS TO BE FURRED OUT.

N. VERIFY EXACT LOCATION AND NUMBER OF EXISTING ELECTRICAL OUTLETS AND LUMINAIRES IN THE FIELD. LOCATIONS OF ITEMS SHOWN ON DRAWINGS AS EXISTING ARE PARTIALLY BASED ON RECORD AND OTHER DRAWINGS WHICH MAY CONTAIN ERRORS. VERIFY THE ACCURACY OF THE INFORMATION SHOWN PRIOR TO BIDDING AND PROVIDE SUCH LABOR AND MATERIAL AS IS NECESSARY TO ACCOMPLISH THE INTENT OF THE CONTRACT DOCUMENTS.

O. REMOVE ABANDONED WIRING TO SOURCE OF SUPPLY TO LEAVE SITE CLEAN.

P. PROVIDE BLANK COVER PLATE FOR ABANDONED FLUSH OUTLETS.

Q. MAINTAIN ACCESS TO EXISTING ELECTRICAL INSTALLATIONS WHICH REMAIN ACTIVE. MODIFY INSTALLATION OR PROVIDE ACCESS PANEL AS APPROPRIATE.

R. OFFER REMOVED LUMINAIRES, WIRING DEVICES, PANELBOARDS AND EQUIPMENT TO THE OWNER. IF OWNER CHOOSES TO RETAIN THESE ITEMS, RETURN SUCH ITEMS TO OWNER. CAREFULLY REMOVE AND DISPOSE OF ITEMS REJECTED BY OWNER FROM PROJECT SITE AND IN A LEGAL MANNER.

S. RECONNECT EXISTING LUMINAIRES NOT SHOWN ON DRAWINGS AND AFFECTED DUE TO DEMOLITION TO NEAREST AVAILABLE EXISTING LIGHTING CIRCUIT ABLE TO TAKE THE ADDITIONAL LOAD.

T. PROVIDE SUITABLE ANCHORAGE AND SUPPORT FOR ELECTRICAL EQUIPMENT IN RATED WALLS, SLABS AND CEILINGS. MOUNT DEVICES AND RACEWAYS IN ACCORDANCE WITH ESTABLISHED CODES AND SPECIFICATIONS.

U. REFER TO SPECIFICATIONS FOR ADDITIONAL REQUIREMENTS.

V. DRAWINGS AND SPECIFICATIONS COMPLEMENT EACH OTHER. REQUIREMENT BY EITHER INFERS REQUIREMENT BY BOTH.

W. CONNECT EQUIPMENT AND DEVICES FURNISHED UNDER OTHER DIVISIONS OF THIS CONTRACT, BY OWNER OR BY OTHER CONTRACTS.

X. UNLESS OTHERWISE NOTED, PROVIDE CONCEALED AND FLUSH MOUNTED INSTALLATION OF DEVICES AND EQUIPMENT IN AREAS.

Y. PROVIDE SEPARATE EQUIPMENT GROUNDING CONDUCTOR IN 120 VOLT, MULTI-WIRE CIRCUITS.

Z. FOR 120 VOLT, 20 AMP CIRCUITS, WHERE CIRCUIT DISTANCE FROM PANELBOARD TO FARTHEST DEVICE/FIXTURE EXCEEDS 60 FEET, PROVIDE #10 SIZE PHASE AND GROUND CONDUCTORS. WHERE CIRCUIT DISTANCE FROM PANELBOARD TO FARTHEST DEVICE/FIXTURE EXCEEDS 90 FEET, PROVIDE #8 SIZE PHASE AND GROUND CONDUCTORS. NOTIFY ENGINEER FOR CIRCUITS EXCEEDING 140 FEET. UPSIZE RACEWAY SIZES AS REQUIRED PER CEC.

AA. RUN ELECTRICAL CONDUIT CONCEALED AND PARALLEL TO BUILDING LINES. VERIFY WITH ARCHITECT.

BB. RECEPTACLE OUTLETS SHALL BE INSTALLED IN COMPLIANCE WITH CEC SECTIONS 210.8, 210.50, AND 406.12.

CC. LIGHTS, SWITCHES AND CONTROL MECHANISMS SHALL COMPLY WITH CEC SECTION 404.

DD. BRACE ELECTRICAL EQUIPMENT TO RESIST A HORIZONTAL FORCE THAT ACT IN ANY DIRECTION. COMPLY WITH TITLE 24 REQUIREMENTS.

EE. INSTALL COMPLETE SYSTEM OF CONDUCTORS IN RACEWAY SYSTEM THROUGHOUT BUILDING FOR FEEDERS, BRANCH CIRCUITS, ETC.

FF. DESIGN OF TEMPORARY POWER FOR CONSTRUCTION SHALL BE THE CONTRACTOR'S RESPONSIBILITY. REMOVE TEMPORARY POWER PRIOR TO COMPLETION OF PROJECT.

GG. ALL WORK ON SERVICE CONDUCTORS, FEEDERS, AND OTHER SUCH EQUIPMENT SHALL BE DONE ONLY WHEN SUCH EQUIPMENT CONDUCTORS, FEEDERS, AND EQUIPMENT ARE DE-ENERGIZED. THE CONTRACTOR SHALL HAVE AN "ELECTRICAL SAFETY AND LOCK-OUT/TAG-OUT PROCEDURE" IN PLACE PRIOR TO COMMENCEMENT OF WORK.

HH. COORDINATE ALL CONDUIT TRENCHING WITH OTHER DISCIPLINES TO AVOID CONFLICT.

II. MINIMUM SIZE FOR EXTERIOR BELOW GRADE CONDUIT SHALL BE 1".

JJ. OCCUPANCY SENSOR NOTES:

1. WALL SENSORS
   a. SENSOR MUST HAVE CLEAR "VIEW" OF OCCUPANTS. WHERE SENSOR WILL BE BLOCKED, SUBSTITUTE WITH SMALL-ROOM CEILING SENSOR.
2. SEE MANUFACTURER'S SPECIFICATION REGARDING PLACING SENSORS AWAY FROM STRONG AIR-FLOW. INDICATE PRECISE LOCATION OF EACH CEILING SENSOR WHERE DRAWINGS INDICATE AIR SUPPLIES.
3. IN INDIVIDUAL ROOMS WITH CEILING SENSORS AND DUAL-LEVEL LIGHTING, ASSUME TWO TOGGLE SWITCH OVERRIDES PER ROOM.
4. PRIOR TO INSTALLATION, RECEIVE FACTORY-TRAINING AND LAYOUT-ASSISTANCE. IF LOCAL AGENT CHANGES LIGHTING DRAWINGS, CONTACT FACTORY REPRESENTATIVE.

KK. PROVIDE DEFERRED APPROVAL AND DESIGN BUILD FOR FIRE ALARM SYSTEM. SUBMIT COMPLETE DRAWINGS TO THE FIRE MARSHAL FOR APPROVAL AND ASSUME FULL RESPONSIBILITY OF THE SYSTEM, DEVICE QUANTITY AND LOCATION, WIRING, PROGRAMMING AND CONTROL PANELS. COORDINATE FINAL DEVICE LOCATIONS WITH THE ARCHITECT PRIOR TO ROUGH-IN.

LL. ALL AIC RATINGS SHOWN ARE MINIMUM REQUIREMENTS. COORDINATE AND UPGRADE RATINGS FOR ALL DISTRIBUTION EQUIPMENT AS PER SHORT CIRCUIT ANALYSIS RECOMMENDATIONS.

MM. HIRE THIRD PARTY TESTING AGENCY TO PERFORM THE FOLLOWING, AS PART OF A DEFERRED SUBMITTAL IN CONSTRUCTION FOR REVIEW AND APPROVAL BY THE ENGINEER OF RECORD:

1. SHORT CIRCUIT STUDY, ARC FLASH STUDY & LABELS, AND OVERCURRENT PROTECTIVE STUDY.
2. ACCEPTANCE TESTING IN ACCORDANCE WITH SPECIFICATIONS.

NN. PROVIDE TESTING REPORTS TO ENGINEER FOR REVIEW UPON COMPLETION OF INSTALLATION FOR THE FOLLOWING, AS PART OF A DEFERRED SUBMITTAL IN CONSTRUCTION FOR REVIEW AND APPROVAL BY THE ENGINEER OF RECORD:

1. INSULATION RESISTANCE (MEGGER) TEST REPORTS PRIOR TO CONDUCTOR TERMINATION AND EQUIPMENT ENERGIZATION.
2. TORQUE TEST REPORTS PRIOR TO EQUIPMENT ENERGIZATION.

SHEET INDEX

E0.01	SYMBOL LIST AND GENERAL NOTES - ELECTRICAL
E0.02	LUMINAIRE SCHEDULES - ELECTRICAL
E0.03	LIGHTING CONTROL MATRIX - ELECTRICAL
E0.04	TITLE 24 - ELECTRICAL
E0.05	TITLE 24 - ELECTRICAL
E0.06	TITLE 24 - ELECTRICAL
E1.01	SITE PLAN - ELECTRICAL
ED1.00	BASEMENT DEMOLITION PLAN - ELECTRICAL
ED1.01	LEVEL 1 DEMOLITION PLAN - ELECTRICAL
ED1.02	LEVEL 2 DEMOLITION PLAN - ELECTRICAL
E2.00	BASEMENT PLAN - LIGHTING
E2.01	LEVEL 01 FLOOR PLAN - LIGHTING
E2.02	LEVEL 02 FLOOR PLAN - LIGHTING
E2.03	ATTIC FLOOR PLAN - LIGHTING
E3.00	BASEMENT PLAN - POWER
E3.01	LEVEL 01 FLOOR PLAN - POWER
E3.02	LEVEL 02 FLOOR PLAN - POWER
E4.01	PARTIAL SINGLE LINE DIAGRAM- ELECTRICAL
E5.01	PANEL SCHEDULES - ELECTRICAL
E5.02	DETAILS - ELECTRICAL

CLIENT

GENERAL SERVICES AGENCY GSA COUNTY OF ALAMEDA

ALAMEDA COUNTY

INTERFACE ENGINEERING
PROJECT 2025-1084
CONTACT Philip Nguyen
1999 Harrison Street, Suite 550
Oakland, CA 94612
TEL 415.489.7240
www.interfaceengineering.com

NOTE: If this drawing is not 22"x34" it has been revised from its original size and the scales noted on drawing/details are no longer applicable.

© 2022 Shah Kawasaki Architects

Revision Number	DATE	ISSUE DESCRIPTION
	09/03/2026	PERMIT SET

Project

WHITECOTTON COTTAGE REHABILITATION
15400 FOOTHILL BLVD
SAN LEANDRO, CA 94578

Architect of Record

P&T

Consultant

PAGE & TURNBULL
170 MAIDEN LANE, 5TH FLOOR
SAN FRANCISCO, CA

REGISTERED PROFESSIONAL ENGINEER
JASON LAU
No. E16806
Exp. 09/30/26
ELECTRICAL
STATE OF CALIFORNIA

Drawing Title

SYMBOL LIST AND GENERAL NOTES - ELECTRICAL

Drawing No.

E0.01

SKA Project Number: 25001

LUMINAIRE SCHEDULE

TYPE	DESCRIPTION	HOUSING	SHIELDING	MOUNTING	FINISH	UL/IP RATING	DRIVER/ POWER SUPPLY	LIGHT SOURCE	INPUT WATTS	VOLTAGE	MFG/CATALOG #	NOTES
L1	SURFACE MOUNT LINEAR LED	22-GAUGE COLD-ROLLED STEEL	ACYLIC LENS	SURFACE	TO BE SELECTED BY ARCHITECT	DAMP	INTEGRAL DRIVER, 0-10V DIMMING	LED, 2916 LUMENS, 3500K, 80CRI	19.7W	UNV	H.E WILLIAMS 75S-4-L30/835-DIM-UNV OR APPROVED EQUIVALENT	
L2	NOT USED											
L3	4" SQUARE LED DOWNLIGHT	METAL	N/A	SURFACE	TO BE SELECTED BY ARCHITECT	DAMP	INTEGRAL DRIVER, 0-10V DIMMING	LED, 1500 LUMENS, 3500K, 90CRI	15.1W	120V	LIGHTOLIER LYTEPROFILE 4 FRAME: 4-S-N-UNV ENGINE/TRIM:P4S-DL-15-935-M-X-X-Z10-U-X OR APPROVED EQUIVALENT	
L3A	4" SQUARE LED DOWNLIGHT	METAL	N/A	SURFACE	TO BE SELECTED BY ARCHITECT	DAMP	INTEGRAL DRIVER, 0-10V DIMMING	LED, 1000 LUMENS, 3500K, 90CRI	10.4W	120V	LIGHTOLIER LYTEPROFILE 4 FRAME: 4-S-N-UNV ENGINE/TRIM:P4S-DL-10-935-M-X-X-Z10-U-X OR APPROVED EQUIVALENT	
L4	SURFACE MOUNT LINEAR LED - STANDARD	METAL	N/A	SURFACE	TO BE SELECTED BY ARCHITECT	DAMP	INTEGRAL DRIVER, 0-10V DIMMING	LED, 2438 LUMENS, 3500K, 90CRI	26.8W	120V	FINELITE HP-3 HP-3-SM-D-4'-S-830-F-120-SC-FC-10%-X-FE-X OR APPROVED EQUIVALENT	
L4A	SURFACE MOUNT LINEAR LED - BOOSTED	METAL	N/A	SURFACE	TO BE SELECTED BY ARCHITECT	DAMP	INTEGRAL DRIVER, 0-10V DIMMING	LED, 2902 LUMENS, 3500K, 90CRI	29.1W	120V	FINELITE HP-3 HP-3-SM-D-4'-B-830-F-120-SC-FC-10%-X-FE-X OR APPROVED EQUIVALENT	
L4B	SURFACE MOUNT LINEAR LED - HIGH	METAL	N/A	SURFACE	TO BE SELECTED BY ARCHITECT	DAMP	INTEGRAL DRIVER, 0-10V DIMMING	LED, 3266 LUMENS, 3500K, 90CRI	30.6W	120V	FINELITE HP-3 HP-3-SM-D-4'-H-830-F-120-SC-FC-10%-X-FE-X OR APPROVED EQUIVALENT	
L5	WALL WASHER AT ARK WORK	STAINLESS STEEL	DIFFUSING LENS	RECESSED AT ART WORK	TO BE SELECTED BY ARCHITECT	DAMP	INTEGRAL DRIVER, 0-10V DIMMING	LED, 1070 LUMENS, 3500K, 90CRI	11W	120V	ALPHABET GAMMA-1H-SW-10LM-35K-90-25-DL-TBD-TBD-RET-120-DIM10 OR APPROVED EQUIVALENT	
S1	EXTERIOR LED POLELIGHT - SINGLE HEAD	DIE-CAST ALUMINUM	IMPACT RESISTANT LENS	SURFACE (FLOOR)	TO BE SELECTED BY ARCHITECT	WET	INTEGRAL DRIVER, 0-10V DIMMING	LED, 7107 LUMENS, 4000K, 80 CRI	42W	120V	GARDCO OPF-S-7L-840-T3M-AR1-120-TBD OR APPROVED EQUIVALENT	1. LUMINAIRE TO BE AIMED AT EXTERIOR PATHWAY. CONTRACTOR TO COORDINATE AIMING ANGLES WITH OWNER PRIOR TO INSTALLATION. 2. PROVIDE ALL NECESSARY OPTIONS AND ACCESSORIES FOR A COMPLETE AND OPERATIONAL SYSTEM.
S2	EXTERIOR LED POLELIGHT - DUAL HEAD	DIE-CAST ALUMINUM	IMPACT RESISTANT LENS	SURFACE (FLOOR)	TO BE SELECTED BY ARCHITECT	WET	INTEGRAL DRIVER, 0-10V DIMMING	LED, 7107 LUMENS EACH HEAD, 4000K, 80 CRI	84W	120V	GARDCO OPF-S-7L-840-T3M-AR1-120-TBD OR APPROVED EQUIVALENT	1. LUMINAIRE TO BE AIMED AT EXTERIOR PATHWAY. CONTRACTOR TO COORDINATE AIMING ANGLES WITH OWNER PRIOR TO INSTALLATION. 2. PROVIDE ALL NECESSARY OPTIONS AND ACCESSORIES FOR A COMPLETE AND OPERATIONAL SYSTEM.
S3	BOLLARD - LED	ALUMINUM ALLOY	IMPACT RESISTANT LENS	SURFACE (FLOOR)	TO BE SELECTED BY ARCHITECT	WET	INTEGRAL DRIVER, 0-10V DIMMING	LED, 3083 LUMENS, 3500K, 80 CRI	28.8W	120V	GARDCO PBL-36-14L-600-NW-G2-3-120V-DD-F1-TBD OR APPROVED EQUIVALENT	
S4	HANDRAIL - PUCK LEDS, ASYMMETRIC DISTRIBUTION	STAINLESS STEEL, MARINE GRADE	VANDAL RESISTANT	AT HANDRAILING OF STAIRS	TO BE SELECTED BY ARCHITECT	WET	INTEGRAL DRIVER, 0-10V DIMMING	LED, 135 LUMENS, 3500K, 80 CRI	1.5W	120V	ALPHABET THETHA-CF-40K-80-VA-OC-SF OR APPROVED EQUIVALENT	1. PROVIDE REMOTE DRIVER. COORDINATE DRIVER LOCATION IN FIELD. 2. PROVIDE PUCK LIGHTS EVERY 18" O.C. OR APPROVED EQUIVALENT ON STAIR RAILING.
S5	EXTERIOR WALL SCONCE	DIE-CAST ALUMINUM, MARINE GRADE	CLEAR	WALL MOUNTED	TO BE SELECTED BY ARCHITECT	WET	INTEGRAL DRIVER, 0-10V DIMMING	LED, 2352 LUMENS, 3500K, 90 CRI	17.9W	120V	BEGA B22386-K35-TBD OR APPROVED EQUIVALENT	
S6	ROUND LED	DIE-CAST ALUMINUM, MARINE GRADE	CLEAR	SURFACE (CEILING)	TO BE SELECTED BY ARCHITECT	WET	INTEGRAL DRIVER, 0-10V DIMMING	LED, 2299 LUMENS, 3500K, 90 CRI	16.8W	120V	BEGA B24411-K35-TBD OR APPROVED EQUIVALENT	
S7	4' STRIP LED	FIBERGLASS ENCLOSURE, ALUMINUM HOUSING	IMPACT RESISTANT ACRYLIC LENS	SUSPENDED	TO BE SELECTED BY ARCHITECT	WET	INTEGRAL DRIVER, 0-10V DIMMING	LED, 4000 LUMENS, 3500K, 80 CRI	30W	120V	HE WILLIAMS 96-4-L40-8-35-HIAFR-DIM-120 OR APPROVED EQUIVALENT	
X1	EXIT SIGN - SINGLE SIDED	THERMOPLASTIC	N/A	SURFACE, UNIVERSAL	WHITE	DAMP	-	LED - GREEN LETTERS	2.5W	UNV	EMERGI-LITE PREMIER EXIT SERIES #W-PREM-AC-G OR APPROVED EQUIVALENT	1. PROVIDE SUITABLE MOUNTING FOR EXIT SIGN BASED ON EXISTING CONFIGURATION OF CEILING.
X2	EXIT SIGN - DOUBLE SIDED	THERMOPLASTIC	N/A	SURFACE, UNIVERSAL	WHITE	DAMP	-	LED - GREEN LETTERS	2.5W	UNV	EMERGI-LITE PREMIER EXIT SERIES #W-PREM-AC-G OR APPROVED EQUIVALENT	1. PROVIDE SUITABLE MOUNTING FOR EXIT SIGN BASED ON EXISTING CONFIGURATION OF CEILING.

NOTES:

1. THIS LUMINAIRE SCHEDULE IS NOT COMPLETE WITHOUT A COPY OF THE PROJECT MANUAL CONTAINING THE ELECTRICAL SPECIFICATIONS.
2. DIMMING CONTROL PROTOCOL (0-10VDC, LINE VOLTAGE, DALI, ETC.) COMPATIBLE WITH LIGHTING CONTROL SYSTEM AS SPECIFIED AND SHOWN ON DRAWINGS.
3. COORDINATE ALL CEILING TYPES WITH LUMINAIRE LOCATIONS PRIOR TO ORDERING LUMINAIRES. COORDINATE INSTALLATION WITH REFLECTED CEILING PLAN.
4. PROVIDE +/- 12 INCH ADJUSTABILITY IN AIRCRAFT CABLE LENGTH WHERE USED.
5. SPECIFIED MANUFACTURERS ARE APPROVED TO SUBMIT BID. INCLUSION DOES NOT RELIEVE MANUFACTURER FROM SUPPLYING PRODUCT AS DESCRIBED.
6. PROVIDE SUBMITTALS THAT INCLUDE THE LUMINAIRE, LAMP AND DIMMABLE LED DRIVER INFORMATION OF EACH LUMINAIRE, WITH APPLICABLE OPTIONS CLEARLY CHECKED OR HIGHLIGHTED. SUBMITTALS NOT INCLUDING THIS INFORMATION WILL BE RETURNED AS REJECTED BY THE ENGINEER OF RECORD.
7. PROVIDE COMMISSIONING OF THE LIGHTING AND LIGHTING CONTROLS IN ACCORDANCE WITH CALIFORNIA TITLE 24 LIGHTING COMMISSIONING REQUIREMENTS.

CLIENT

GENERAL SERVICES AGENCY GSA COUNTY OF ALAMEDA

ALAMEDA COUNTY

INTERFACE ENGINEERING

PROJECT 2025-1084
CONTACT Philip Nguyen

1999 Harrison Street, Suite 550
Oakland, CA 94612
TEL 415.489.7240
www.interfaceengineering.com

NOTE: If this drawing is not 22"x34" it has been revised from its original size and the scales noted on drawing/details are no longer applicable.

© 2022 Shah Kawasaki Architects

Revision Number	DATE	ISSUE DESCRIPTION
	09/03/2026	PERMIT SET

Project

WHITECOTTON COTTAGE REHABILITATION

15400 FOOTHILL BLVD
SAN LEANDRO, CA 94578

Architect of Record

P&T

Consultant

PAGE & TURNBULL
170 MAIDEN LANE, 5TH FLOOR
SAN FRANCISCO, CA

REGISTERED PROFESSIONAL ENGINEER
JASON LAU
No. E16806
Exp: 09/30/26
ELECTRICAL
STATE OF CALIFORNIA

Drawing Title

LUMINAIRE SCHEDULES - ELECTRICAL

Drawing No.

E0.02

SKA Project Number: 25001

LIGHTING CONTROL MATRIX: SPACE BY SPACE

SPACE NAME	TYPE OF CONTROLS	CONTROL FUNCTIONS	PRODUCT BASIS OF DESIGN
OPEN OFFICES > 600 SQFT	ON/OFF/DIMMING SWITCH, OCCUPANCY SENSOR	MANUAL ON/OFF/DIMMING CONTROL (ACCESSIBLE TO USERS) EACH OCCUPANT SENSING CONTROLS SHALL BE CONFIGURED WITH ZONES UP TO, AND NOT GREATER THAN 600 SQFT. AFTER 15 MINUTES VACANCY IN EACH CONTROL ZONE, GENERAL LIGHTING TO DIM TO 20% POWER IN THAT CONTROL ZONE. OCCUAPNCY CONTROL TO AUTOMATICALLY SHUT-OFF GENERAL LIGHTING IN ALL CONTROL ZONES AFTER 15 MINUTES OF VACANCY IN THE ENTIRE SPACE. WHEN A CONTROL ZONE DETECTS OCCUPANCY, LIGHTS SHALL TURN ON TO 100% POWER, LIGHTING IN ALL OTHER CONTROL ZONES TO TURN ON LIGHTINS TO 20% POWER. LIGHTING WITHIN DAYLIT ZONES TO BE AUTOMATICALLY DIMMED BY DAYLIGHT SENSOR. PROVIDE SEPARATE DAYLIGHT CONTROL FOR LUMINAIRES IN EACH TYPE OF DAYLIT ZONE (PRIMARY, SECONDARY, SKYLIT).	
CORRIDOR	ON/OFF SWITCH, OCCUPANCY SENSOR, AUTOMATIC TIMECLOCK,	MANUAL ON/OFF CONTROL AUTO-ON TO 100% POWER WHEN OCCUPANCY IS SENSED, LIGHTS TO DIM TO 50% POWER AFTER 15 MINUTES OF VACANCY. ALL LIGHTING TO BE AUTOMATICALLY SHUT OFF WHEN BUILDING IS TYPICALLY UNOCCUPIED VIA TIMECLOCK CONTROL	
LOBBY	ON/OFF/DIMMING SWITCH, AUTOMATIC TIME CLOCK, OCCUPANCY SENSOR	MANUAL ON/OFF/DIMMING CONTROL (ACCESSIBLE TO USERS) LIGHTS TO TURN ON ONE HOUR BEFORE BUSINESS OPENING HOURS AND TURN OFF TWO HOURS AFTER BUSINESS IS CLOSED VIA TIME CLOCK SCHEDULE. AUTO-ON TO 100% POWER WHEN OCCUPANCY IS SENSED, LIGHTS TO DIM TO 50% POWER AFTER 20 MINUTES OF VACANCY. ALL LIGHTING TO BE AUTOMATICALLY SHUT OFF WHEN BUILDING IS TYPICALLY UNOCCUPIED VIA TIMECLOCK CONTROL.	
RESTROOM	ON/OFF SWITCH WITH INTEGRAL OCCUPANCY SENSOR	MANUAL ON/OFF CONTROL (ACCESSIBLE TO USERS) AUTO-ON TO 100% POWER WHEN OCCUPANCY IS SENSED, AUTO-OFF AFTER 20 MINUTES OF VACANCY.	
BREAK ROOM	ON/OFF/DIMMING SWITCH, OCCUPANCY SENSOR	MANUAL ON/OFF/DIMMING CONTROL (ACCESSIBLE TO USERS) PARTIAL-ON TO 50% POWER WHEN OCCUPANCY IS SENSED, AUTO-OFF AFTER 15 MINUTES OF VACANCY. LIGHTS CAN BE TURN ON TO 100% POWER VIA WALL SWITCH CONTROL.	
CONFERENCE/MEETING/TRAINING ROOMS	ON/OFF/DIMMING SWITCH, OCCUPANCY SENSOR	MANUAL ON/OFF/DIMMING CONTROL (ACCESSIBLE TO USERS) PARTIAL-ON TO 50% POWER WHEN OCCUPANCY IS SENSED, AUTO-OFF AFTER 15 MINUTES OF VACANCY. LIGHTS CAN BE TURN ON TO 100% POWER VIA WALL SWITCH CONTROL. RECEPTACLES REQUIRING PLUG LOAD CONTROL SHALL BE CONTROLLED BY LOCAL OCCUPANCY SENSOR IN SPACE.	
ELECTRICAL ROOM	ON/OFF SWITCH	MANUAL ON/OFF CONTROL (ACCESSIBLE TO USERS)	
ALL EXTERIOR LIGHTING	PHOTOCELL, AUTOMATIC SCHEDULE CONTROLS	ASTRONOMICAL TIME-CLOCK TO TURN ON ALL LIGHTING AT DUSK (SUNSET) AND TURN OFF ALL LIGHTING AT DAWN (SUNRISE). PHOTO-CELL TO TURN ON ALL LIGHTING WHEN DAYLIGHT IS NOT AVAILALBLE AND TURN OFF ALL LIGHTING WHEN DAYLIGHT IS AVAILABLE. AUTOMATIC SCHEDULING TIME-CLOCK AT TURN ON LIGHTING DURING OPENING HOURS AND TURN OFF ALL LIGHTING [OR REDUCE LIGHTING POWER BY 50%] AT SCHEDULED UNOCCUPIED PERIODS.	

GENERAL NOTES:

A. BASIS OF DESIGN IS WATTSTOPPER DLM WIRED .
B. DEMAND RESPONSE IS NOT REQUIRED PER CA TITLE 24 FOR BUILDINGS WITH CONNECTED LIGHTING LOADS UNDER 4,000W.
C. REFER TO SPECIFICATION SECTION 26 09 25 IN CONJUNCTION WITH THIS SCHEDULE.
D. LIGHTING CONTROLS TO COMPLY WITH THE CALIFORNIA BUILDING ENERGY EFFICIENCY STANDARDS, 2025 TITLE 24.
E. PROVIDE INITIAL START UP TRAINING WITH OWNER AND DESIGN TEAM, AND AN ADDITIONAL VISIT FOR ADJUSTMENTS ONCE AFTER OCCUPANCY.

CLIENT

GENERAL SERVICES AGENCY GSA COUNTY OF ALAMEDA

ALAMEDA COUNTY

INTERFACE ENGINEERING
PROJECT 2025-1084
CONTACT Philip Nguyen
1999 Harrison Street, Suite 550
Oakland, CA 94612
TEL 415.489.7240
www.interfaceengineering.com

NOTE: If this drawing is not 22"x34" it has been revised from its original size and the scales noted on drawing/details are no longer applicable.

© 2022 Shah Kawasaki Architects

Revision Number	DATE	ISSUE DESCRIPTION
	09/03/2026	PERMIT SET

Project

WHITECOTTON COTTAGE REHABILITATION

15400 FOOTHILL BLVD
SAN LEANDRO, CA 94578

Architect of Record

P&T

Consultant

PAGE & TURNBULL
170 MAIDEN LANE, 5TH FLOOR
SAN FRANCISCO, CA

REGISTERED PROFESSIONAL ENGINEER
JASON LAU
No. E16806
Exp. 09/30/26
ELECTRICAL
STATE OF CALIFORNIA

Drawing Title

LIGHTING CONTROL MATRIX - ELECTRICAL

Drawing No.

E0.03

SKA Project Number: 25001

STATE OF CALIFORNIA
Indoor Lighting
CALIFORNIA ENERGY COMMISSION

CERTIFICATE OF COMPLIANCE			NRCC-LTI-E
This document is used to demonstrate compliance with requirements in §110.9, §110.12(c), §130.0, §130.1, §140.6 and §141.0(b)2 for indoor lighting scopes using the prescriptive path for nonresidential and hotel/motel occupancies. It is also used to document compliance with requirements in §160.5, §170.2(e) and §180.2(b)4 for indoor lighting scopes using the prescriptive path for multifamily occupancies. Multifamily includes dormitory and senior living facilities.			
Project Name:	Whitecotton Cotttage Rehabilitation	**Report Page:**	**(Page 1 of 9)**
Project Address:	15400 Foothill Blvd	**Date Prepared:**	9/1/2026

A. GENERAL INFORMATION				
01	Project Location (city)	San Leandro	04 Total Conditioned Floor Area (ft^2)	2,891
02	Climate Zone	3	05 Total Unconditioned Floor Area (ft^2)	556
03	Occupancy Types Within Project (select all that apply):		06 # of Stories (Habitable Above Grade)	1

● Office ● Support Areas ● All Other Occupancies

B. PROJECT SCOPE

This table includes any lighting systems that are within the scope of the permit application and are demonstrating compliance using the prescriptive path outlined in §140.6 / §170.2(e) or §141.0(b)2 / §180.2(b)4 for alterations.

Scope of Work	Conditioned Spaces		Unconditioned Spaces	
01	02	03	04	05
My Project Consists of (check all that apply):	Calculation Method	Area (ft^2)	Calculation Method	Area (ft^2)
☐ New Lighting System				
☐ New Lighting System - Parking Garage				
☒ Altered Lighting System	Area Category Method	2891	Area Category Method	556
Total Area of Work (ft^2)	2891		556	

STATE OF CALIFORNIA
Indoor Lighting
CALIFORNIA ENERGY COMMISSION

CERTIFICATE OF COMPLIANCE			NRCC-LTI-E
Project Name:	Whitecotton Cotttage Rehabilitation	**Report Page:**	**(Page 2 of 9)**
		Date Prepared:	9/1/2026

C. COMPLIANCE RESULTS

If any cell on this table says "DOES NOT COMPLY" or "COMPLIES with Exceptional Conditions" refer to Table D. for guidance.

Lighting in conditioned and unconditioned spaces must not be combined for compliance per §140.6(b)1 /§170.2(e)	Allowed Lighting Power per §140.6(b) /§170.2(e) (Watts)					Adjusted Lighting Power per §140.6(a) /§170.2(e) (Watts)				Compliance Results
	01	02	03	04		05	06		07	08
	Complete Building §140.6(c)1	Area Category §140.6(c)2 /§170.2(e)4	Area Category Additional §140.6(c)2G / §170.2(e)4Av (+)	**Total Allowed** (Watts)	≥	Total Designed (Watts)	Adjustments PAF Lighting Control Credits §140.6(a)2 /§170.2(e)1B (-)	=	**Total Adjusted** (Watts) *Includes Adjustments	**05 must be >= 08 §140.6 /§170.2(e)**
	(See Table I)	(See Table I)	(See Table J)			(See Table F)	(See Table P)			
Conditioned		1,858.6	125	= 1,983	≥	1,551	0	=	1551	COMPLIES
Unconditioned		222.4	0	= 222	≥	118	0	=	118	COMPLIES
Controls Compliance (See Table H for Details)										COMPLIES
One-for-one Luminaire Alterations Compliance (See Table Q for Details)										

D. EXCEPTIONAL CONDITIONS

This table is auto-filled with uneditable comments because of selections made or data entered in tables throughout the form.

E. ADDITIONAL REMARKS

This table includes remarks made by the permit applicant to the Authority Having Jurisdiction.

STATE OF CALIFORNIA
Indoor Lighting
CALIFORNIA ENERGY COMMISSION

CERTIFICATE OF COMPLIANCE			NRCC-LTI-E
Project Name:	Whitecotton Cotttage Rehabilitation	**Report Page:**	**(Page 3 of 9)**
		Date Prepared:	9/1/2026

F. INDOOR LIGHTING FIXTURE SCHEDULE

This table includes all planned permanent and portable lighting other than dwelling unit/ hotel/ motel room lighting. Multifamily dwelling unit and hotel/motel room lighting is documented in Table T. If using Table T to document lighting in multifamily common use areas providing shared provisions for living, eating, cooking or sanitation, those luminaires are not included here.

Designed Wattage: Conditioned Spaces

01	02	03	04	05	06	07	08	09	10	
Name or Item Tag	Complete Luminaire Description	Modular (Track) Fixture	Small Aperture & Color Change [1]	Watts per luminaire[2]	How is Wattage determined	Total Number of Luminaires	Excluded per §140.6(a)3 / §170.2(e)2C	Design Watts	Field Inspector Pass	Fail
L3	L3	No	NA	15.1	Mfr. Spec	41	No	619.1	☐	☐
L3A	L3A	No	NA	10.4	Mfr. Spec	15	No	156	☐	☐
L4	L4	No	NA	26.8	Mfr. Spec	13	No	348.4	☐	☐
L4A	L4A	No	NA	29.1	Mfr. Spec	2	No	58.2	☐	☐
L4B	L4B	No	NA	30.6	Mfr. Spec	8	No	244.8	☐	☐
L5	L5	No	NA	10.4	Mfr. Spec	12	No	124.8	☐	☐
Total Designed Watts: CONDITIONED SPACES								1,551		

Designed Wattage: Unconditioned Spaces

01	02	03	04	05	06	07	08	09	10	
Name or Item Tag	Complete Luminaire Description	Modular (Track) Fixture	Small Aperture & Color Change [1]	Watts per luminaire[2]	How is Wattage determined	Total Number of Luminaires	Excluded per §140.6(a)3 / §170.2(e)2C	Design Watts	Field Inspector Pass	Fail
L1	L1	No	NA	19.7	Mfr. Spec	6	No	118.2	☐	☐
Total Designed Watts: UNCONDITIONED SPACES								118		

[1]*FOOTNOTE: Design Watts for small aperture and color changing luminaires which qualify per §140.6(a)4B /§170.2(e)2D is adjusted to be 75% /80% of their rated wattage. Table F automatically makes this adjustment, the permit applicant should enter full rated wattage in column 05.*

[2]*Authority Having Jurisdiction may ask for Luminaire cut sheets to confirm wattage used for compliance per §130.0(c) /§160.5(b). Wattage used must be the maximum rated for the luminaire, not the lamp.*

G. MODULAR LIGHTING SYSTEMS

This section does not apply to this project.

STATE OF CALIFORNIA
Indoor Lighting
CALIFORNIA ENERGY COMMISSION

CERTIFICATE OF COMPLIANCE			NRCC-LTI-E
Project Name:	Whitecotton Cotttage Rehabilitation	**Report Page:**	**(Page 4 of 9)**
		Date Prepared:	9/1/2026

H. INDOOR LIGHTING CONTROLS (Not including PAFs)

This table includes lighting controls for conditioned and unconditioned spaces.

Building Level Controls

01	02	03	
		Field Inspector	
Mandatory Demand Response §110.12(c)	Shut-off controls §130.1(c) / §160.5(b)4C	Pass	Fail
NA < 4,000W subject to multilevel	Whole Building Auto Time Switch	☐	☐

Area Level Controls

04	05	06	07	08	09	10	11	12	
Area Description	Complete Building or Area Category Primary Function Area	Manual Controls §130.1(a) /§160.5(b)4A	Multi-Level Controls §130.1(b) /§160.5(b)4B	Shut-Off Controls §130.1(c) //§160.5(b)4C	Primary/Skylit Daylighting §130.1(d) /§160.5(b)4D	Secondary Daylighting §130.1(d) /§160.5(b)4D	Interlocked Systems §140.6(a)1/ §170.2(e)2A	Field Inspector Pass	Fail
Whole Building	All Other Space Types	Readily Accessible and located in the same space.	Dimmer	Building Level (Shut-off control requirements are met at the building level)	Included	Included	No	☐	☐
					13				
					Plan Sheet Showing Daylit Zones:				

I. LIGHTING POWER ALLOWANCE: COMPLETE BUILDING OR AREA CATEGORY METHODS

Each area complying using the Complete Building or Area Category Methods per §140.6(b) are included in this table. Column 06 indicates if additional lighting power allowances per §140.6(c) or adjustments per §140.6(a) are being used .

Conditioned Spaces

01	02	03	04	05	06

STATE OF CALIFORNIA
Indoor Lighting
CALIFORNIA ENERGY COMMISSION

CERTIFICATE OF COMPLIANCE			NRCC-LTI-E
Project Name:	Whitecotton Cotttage Rehabilitation	**Report Page:**	**(Page 5 of 9)**
		Date Prepared:	9/1/2026

I. LIGHTING POWER ALLOWANCE: COMPLETE BUILDING OR AREA CATEGORY METHODS

Area Description	Complete Building or Area Category Primary Function Area	Allowed Density (W/ft^2)	Area (ft^2)	Allowed Wattage (Watts)	Additional Allowance / Adjustment Area CategoryPAF	PAF
Storage	All Other Space Types	0.4	99	39.6	No	No
Corridor/Vestibule	Corridor	0.4	60	24	No	No
Open Office > 250	Office (>250 square feet)	0.6	621	372.6	No	No
Enclosed Office	Office (>250 square feet)	0.6	413	247.8	No	No
Meeting/Conference/Training Rooms	Convention, Conference, Multipurpose and Meeting Center	0.75	922	691.5	Yes	No
Restroom	Restroom	0.65	130	84.5	No	No
Break Room	Lounge	0.55	106	58.3	No	No
MEP Room	Electrical, Mechanical, or Telephone Room	0.4	30	12	No	No
Reception	Main Entry Lobby	0.7	172	120.4	Yes	No
Stair Hall	Stairwell	0.6	287	172.2	Yes	No
Elevator Lobby	Main Entry Lobby	0.7	51	35.7	No	No
		TOTALS:	2,891	1,858.6	See Tables J, or P for detail	

Unconditioned Spaces

01	02	03	04	05	06	
Area Description	Complete Building or Area Category Primary Function Area	Allowed Density (W/ft^2)	Area (ft^2)	Allowed Wattage (Watts)	Additional Allowance / Adjustment Area CategoryPAF	PAF
Storage	All Other Space Types	0.4	556	222.4	No	No
		TOTALS:	556	222.4	See Tables J, or P for detail	

STATE OF CALIFORNIA
Indoor Lighting
CALIFORNIA ENERGY COMMISSION

CERTIFICATE OF COMPLIANCE			NRCC-LTI-E
Project Name:	Whitecotton Cotttage Rehabilitation	**Report Page:**	**(Page 6 of 9)**
		Date Prepared:	9/1/2026

J. ADDITIONAL ALLOWANCE: AREA CATEGORY METHOD QUALIFYING LIGHTING SYSTEM

All areas indicated in Table I as using an additional allowance using the Area Category Method have been included in this table to calculate the additional allowance per Table 140.6-C /170.2-M

Conditioned Spaces

01	02	03	04	05	06	07	08	09	10
Area Description	Primary Function Area	Applicable Qualifying Lighting System from Table 140.6-C	Allowed Density (W/ft^2 or W/lf or W/unit)	Ltg Area, Length or ATM/Mirror (ft^2, lf or #)	Extra Allowance (Watts)	Luminaire Name or Item Tag	Watts per Luminaire	Number of Luminaires	Total Design Watts
Meeting/Conference/Training Rooms	Convention, Conference, Multipurpose and Meeting Center	Decorative/ Display A	0.25	922	230.5	L5	10.4	4	41.6
Total Design Watts	Calculated Allowance (Watts):	Total Additional Allowance for this area:							
41.6	230.5	41.6							
Reception	Main Entry Lobby	Decorative/ Display A	0.25	172	43.0	L5	10.4	2	20.8
Total Design Watts	Calculated Allowance (Watts):	Total Additional Allowance for this area:							
20.8	43.0	20.8							
Stair Hall	Stairwell	Decorative/ Display A	0.35	287	100.4	L5	10.4	4	41.6
						L5	10.4	2	20.8

STATE OF CALIFORNIA
Indoor Lighting
CALIFORNIA ENERGY COMMISSION

CERTIFICATE OF COMPLIANCE			NRCC-LTI-E
Project Name:	Whitecotton Cotttage Rehabilitation	**Report Page:**	**(Page 7 of 9)**
		Date Prepared:	9/1/2026

J. ADDITIONAL ALLOWANCE: AREA CATEGORY METHOD QUALIFYING LIGHTING SYSTEM

Total Design Watts	Calculated Allowance (Watts):	Total Additional Allowance for this area:
62.4	100.4	62.4
	11	
Total Additional Allowance (Watts) CONDITIONED SPACES	125	

P. POWER ADJUSTMENT: LIGHTING CONTROL CREDIT (POWER ADJUSTMENT FACTOR (PAF))

This section does not apply to this project.

Q. ONE-FOR-ONE LUMINAIRE ALTERATIONS

This section does not apply to this project.

R. 80% LIGHTING POWER FOR ALL ALTERATIONS - CONTROLS EXCEPTIONS

This section does not apply to this project.

S. DAYLIGHT DESIGN POWER ADJUSTMENT FACTOR (PAF)

This section does not apply to this project.

T. DWELLING UNIT LIGHTING

This section does not apply to this project.

STATE OF CALIFORNIA
Indoor Lighting
CALIFORNIA ENERGY COMMISSION

CERTIFICATE OF COMPLIANCE			NRCC-LTI-E
Project Name:	Whitecotton Cotttage Rehabilitation	**Report Page:**	**(Page 8 of 9)**
		Date Prepared:	9/1/2026

U. DECLARATION OF REQUIRED CERTIFICATES OF INSTALLATION

Selections have been made based on information provided in this document. If any selections have been changed by permit applicant, an explanation should be included in Table E. Additional Remarks. These documents must be provided to the building inspector during construction and can be found online

Form/Title
NRCI-LTI-E - Must be submitted for all buildings

V. DECLARATION OF REQUIRED CERTIFICATES OF ACCEPTANCE

Selections have been made based on information provided in this document. If any selections have been changed by the permit applicant, an explanation should be included in Table E. Additional Remarks. These documents must be provided to the building inspector during construction and any with "-A" in the form name must be completed through an Acceptance Test Technician Certification Provider (ATTCP). For more information visit: http://www.energy.ca.gov/title24/attcp/providers.html

Form/Title	Systems/Spaces To Be Field Verified
NRCA-LTI-02-A - Must be submitted for occupancy sensors and automatic time switch controls.	Whole Building Time Switch;
NRCA-LTI-03-A - Must be submitted for daylight responsive controls.	Whole Building;

STATE OF CALIFORNIA
Indoor Lighting
CALIFORNIA ENERGY COMMISSION

CERTIFICATE OF COMPLIANCE			NRCC-LTI-E
Project Name:	Whitecotton Cotttage Rehabilitation	**Report Page:**	**(Page 9 of 9)**
Project Address:	15400 Foothill Blvd	**Date Prepared:**	9/1/2026

DOCUMENTATION AUTHOR'S DECLARATION STATEMENT

I certify that this Certificate of Compliance documentation is accurate and complete.

Documentation Author Name: Jason Lau	Documentation Author Signature:
Company: Interface Engineering	Signature Date: 2026-09-01
Address: 49 Stevenson Street	CEA/AEA/ECC Certification Identification (if applicable):
City/State/Zip: San Francisco CA 94105	Phone: 415-489-7240

RESPONSIBLE PERSON'S DECLARATION STATEMENT

I certify the following under penalty of perjury, under the laws of the State of California:

1. The information provided on this Certificate of Compliance is true and correct.
2. I am eligible under Division 3 of the Business and Professions Code to accept responsibility for the building design or system design identified on this Certificate of Compliance (responsible designer)
3. The energy features and performance specifications, materials, components, and manufactured devices for the building design or system design identified on this Certificate of Compliance conform to the requirements of Title 24, Part 1 and Part 6 of the California Code of Regulations.
4. The building design features or system design features identified on this Certificate of Compliance are consistent with the information provided on other applicable compliance documents, worksheets, calculations, plans and specifications submitted to the enforcement agency for approval with this building permit application.
5. I will ensure that a completed signed copy of this Certificate of Compliance shall be made available with the building permit(s) issued for the building, and made available to the enforcement agency for all applicable inspections. I understand that a completed signed copy of this Certificate of Compliance is required to be included with the documentation the builder provides to the building owner at occupancy.

Responsible Person Name: Jason Lau	Responsible Person Signature:
Responsible Person Scope: Jason Lau	
Company: Interface Engineering Inc.	Date Signed: 2026-09-01
Address: 49 Stevenson Street	License: E16806
City/State/Zip: San Francisco CA 94105	Phone: 415-489-7240

CLIENT

GENERAL SERVICES AGENCY
GSA
COUNTY OF ALAMEDA

ALAMEDA COUNTY

INTERFACE ENGINEERING
PROJECT 2025-1084
CONTACT Philip Nguyen
1999 Harrison Street, Suite 550
Oakland, CA 94612
TEL 415.489.7240
www.interfaceengineering.com

NOTE: If this drawing is not 22"x34" it has been revised from its original size and the scales noted on drawing/details are no longer applicable.

© 2022 Shah Kawasaki Architects

Revision Number	DATE	ISSUE DESCRIPTION
	09/03/2026	PERMIT SET

Project

WHITECOTTON COTTAGE REHABILITATION

15400 FOOTHILL BLVD
SAN LEANDRO, CA 94578

Architect of Record

P&T

Consultant

PAGE & TURNBULL
170 MAIDEN LANE, 5TH FLOOR
SAN FRANCISCO, CA

REGISTERED PROFESSIONAL ENGINEER
JASON LAU
No. E16806
Exp. 09/30/26
ELECTRICAL
STATE OF CALIFORNIA

Drawing Title

TITLE 24 - ELECTRICAL

Drawing No.

E0.04

SKA Project Number: 25001

STATE OF CALIFORNIA
Outdoor Lighting
CALIFORNIA ENERGY COMMISSION

CERTIFICATE OF COMPLIANCE		NRCC-LTO-E
This document is used to demonstrate compliance with requirements in §110.9, §130.0, §130.2, §140.7, and §141.0(b)2L for outdoor lighting scopes using the prescriptive path for nonresidential and hotel/motel occupancies. It is also used to document compliance with requirements in §160.5, §170.2(e)6, §180.1(a) and §180.2(b)4Bv for outdoor lighting scopes using the prescriptive path for multifamily and mixed-use occupancies. Multifamily includes dormitory and senior living facilities.		
Project Name: Whitecotton Cottage Rehabilitation	**Report Page:**	**(Page 1 of 10)**
Project Address: 15400 Foothill Blvd	**Date Prepared:**	9/1/2026

A. GENERAL INFORMATION				
01	Project Location (city)	San Leandro	04 Total Illuminated Hardscape Area (ft^2)	5850
02	Climate Zone	3		
03	Outdoor Lighting Zone per Title 24 Part 1	§10.114 or as designated by Authority Having Jurisdiction (AHJ):		
☐ LZ-0: Very Low - Undeveloped Parkland	☒ LZ-2: Moderate - Urban Clusters	☐ LZ-4: High - Must be reviewed by CA Energy Commission for Approval		
☐ LZ-1: Low - Rural Areas	☐ LZ-3: Moderately High - Urban Areas			
05	Occupancy Types within Project			
● Office ● Support Areas ● All Other Occupancies				

B. PROJECT SCOPE

This table includes outdoor lighting systems that are within the scope of the permit application and are demonstrating compliance using the prescriptive path outlined in §140.7 / §170.2(e)6 or §141.0(b)2L / § 180.2(b)4Bv for alterations.

My Project Consists of:

01	02	
☐ New Lighting System	Must Comply with Allowances from §140.7 / §170.2(e)6	
☒ Altered Lighting System	Is your alteration increasing the connected lighting load (Watts)?	● Yes ○ No
03	04	05
% of Existing Luminaires Being Altered[1]	Sum Total of Luminaires Being Added or Altered	Calculation Method
☐ < 10% ☐ >= 10% and < 50% ☐ >= 50%	0	

Please proceed to Table F. Outdoor Lighting Fixture Schedule to define the project's luminaires.

[1] FOOTNOTES: % of Existing Luminaires Being Altered = (Sum Total of Luminaires Being Added or Altered / Existing Luminaires within the Scope of the Permit Application) x 100.

STATE OF CALIFORNIA
Outdoor Lighting
CALIFORNIA ENERGY COMMISSION

CERTIFICATE OF COMPLIANCE		NRCC-LTO-E
Project Name: Whitecotton Cottage Rehabilitation	**Report Page:**	**(Page 2 of 10)**
	Date Prepared:	9/1/2026

C. COMPLIANCE RESULTS

Results in this table are automatically calculated from data input and calculations in Tables F through N. Note: If any cell on this table says "COMPLIES with Exceptional Conditions" refer to Table D. Exceptional Conditions for guidance or see applicable Table referenced below.

Calculations of Total Allowed Lighting Power (Watts) §140.7 / §170.2(e)6 or §141.0(b)2L / § 180.2(b)4Bv												Compliance Results		
01		02		03		04		05		06		07	08	09
General Hardscape Allowance §140.7(d)1 / §170.2(e)6 (See Table I)	+	Per Application §140.7(d)3 / §170.2(e)6 (See Table J)	+	Sales Frontage §140.7(d)2 (See Table K)	+	Ornamental §140.7(d)2 / §170.2(e)6 (See Table L)	+	Per Specific Area §140.7(d)2 / §170.2(e)6 (See Table M)	OR	Existing Power Allowance §141.0(b)2L / § 180.2(b)4Bv (See Table N)	=	**Total Allowed** (Watts)	≥	**Total Actual** (Watts)	**07 must be >= 08**
460	+	45	+	---	+	---	+	30	OR	---	=	535	≥	511	COMPLIES
Shielding Compliance (See Table G for Details)															COMPLIES
Controls Compliance (See Table H for Details)															COMPLIES

D. EXCEPTIONAL CONDITIONS

This table is auto-filled with uneditable comments because of selections made or data entered in tables throughout the form.

E. ADDITIONAL REMARKS

This table includes remarks made by the permit applicant to the Authority Having Jurisdiction.

STATE OF CALIFORNIA
Outdoor Lighting
CALIFORNIA ENERGY COMMISSION

CERTIFICATE OF COMPLIANCE		NRCC-LTO-E
Project Name: Whitecotton Cottage Rehabilitation	**Report Page:**	**(Page 3 of 10)**
	Date Prepared:	9/1/2026

F. OUTDOOR LIGHTING FIXTURE SCHEDULE

For new or altered lighting systems demonstrating compliance with §140.7 / §170.2(e)6 all new luminaires being installed and any existing luminaires remaining or being moved within the spaces covered by the permit application are included in the Table below. For altered lighting systems using the Existing Power method per §141.0(b)2L only new luminaires being installed and replacement luminaires being installed as part of the project scope are included (ie, existing luminaires remaining or existing luminaires being moved are not included). Outdoor lighting attached to multifamily buildings and controlled from the inside of a dwelling unit are included in Table H. and are not included here. All other multifamily outdoor lighting is included here.

Designed Wattage:

01	02		03	04	05	06	07	08	09	10	
Name or Item Tag	Complete Luminaire Description		Watts per luminaire[1, 2]	How is Wattage determined	Total Number Luminaires [2]	Luminaire Status[3]	Excluded per §140.7(a) / §170.2(e)6A	Design Watts	Cutoff Req. > 6,200 initial lumen output §130.2(b) /§160.5(c)1 [4]	Field Inspector	
										Pass	Fail
S1	S1	☐ Linear	42	Mfr. Spec	1	New	☐	42	Provided	☐	☐
S2	S2	☐ Linear	84	Mfr. Spec	1	New	☐	84	Provided	☐	☐
S3	S3	☐ Linear	28.8	Mfr. Spec	8	New	☐	230.4	NA: < 6200 lumens	☐	☐
S4	S4	☐ Linear	1.5	Mfr. Spec	60	New	☒	---	NA: < 6200 lumens	☐	☐
S5	S5	☐ Linear	17.9	Mfr. Spec	6	New	☐	107.4	NA: < 6200 lumens	☐	☐
S6	S6	☐ Linear	16.8	Mfr. Spec	1	New	☒	---	NA: < 6200 lumens	☐	☐
S6	S6	☐ Linear	16.8	Mfr. Spec	1	New	☐	16.8	NA: < 6200 lumens	☐	☐
S7	S7	☐ Linear	30	Mfr. Spec	1	New	☐	30	NA: < 6200 lumens	☐	☐
							Total Design Watts:	511			

* NOTES: Selections with a * require a note in the space below explaining how compliance is achieved.
EX: Luminaire is lighting a statue; EXCEPTION 2 to §130.2(b)

[1] FOOTNOTES: Authority Having Jurisdiction may ask for Luminaire cut sheets to confirm wattage used for compliance per §130.0(c) / §160.5(b)
[2] For linear luminaires, wattage should be indicated as W/lf instead of Watts/luminaire. Total linear feet should be indicated in column 05 instead of number of luminaires.

STATE OF CALIFORNIA
Outdoor Lighting
CALIFORNIA ENERGY COMMISSION

CERTIFICATE OF COMPLIANCE		NRCC-LTO-E
Project Name: Whitecotton Cottage Rehabilitation	**Report Page:**	**(Page 4 of 10)**
	Date Prepared:	9/1/2026

E. OUTDOOR LIGHTING FIXTURE SCHEDULE

For new or altered lighting systems demonstrating compliance with §140.7 / §170.2(e)6 all new luminaires being installed and any existing luminaires remaining or being moved within the spaces covered by the permit application are included in the Table below. For altered lighting systems using the Existing Power method per §141.0(b)2L only new luminaires being installed and replacement luminaires being installed as part of the project scope are included (ie, existing luminaires remaining or existing luminaires being moved are not included). Outdoor lighting attached to multifamily buildings and controlled from the inside of a dwelling unit are included in Table H. and are not included here. All other multifamily outdoor lighting is included here.

Designed Wattage:

01	02	03	04	05	06	07	08	09	10
S2	S2	2 MH from property line	No Limit	B0	All other outdoor lighting, including decorative	U2	U0	> 2 MH from property line	G2	G0	☐	☐
S1	S1	2 MH from property line	No Limit	B0	All other outdoor lighting, including decorative	U2	U0	> 2 MH from property line	G2	G0	☐	☐

[1] Select "New" for new luminaires in a new outdoor lighting project, or for added luminaires in an alteration. Select "Altered" for replacement luminaires in an alteration. Select "Existing to Remain" for existing luminaires within the project scope that are not being altered and are remaining. Select "Existing Reinstalled" for existing luminaires which are being removed and reinstalled as part of the project scope.
[4] Compliance with mandatory shielding requirements is required for luminaires with initial lumen output >= 6,200 unless exempted by §130.2(b)/ §160.5(c)

G. SHIELDING REQUIREMENTS (BUG)

This table includes fixtures of >=6,200 initial lumens indicated on Table F as needing to comply with Shielding Requirements. Maximum lumens can be found in Title 24, Part 11, Section 5.106.8.

01	02	03	04	05	06	07	08	09	10	11	12	
Name or Item Tag	Complete Luminaire Description	Backlight Rating[1]			Uplight Rating[2]			Glare Rating (Lumens)[3]			Field Inspector	
		Mounting Height[1]	Max Allowable Backlight Rating [3]	Backlight Rating Per Design	Lighting type	Max Allowable Uplight Rating [3]	Uplight Rating Per Design	Mounting Height[1]	Max Allowable Glare Rating [3]	Glare Rating Per Design	Pass	Fail
S2	S2	2 MH from property line	No Limit	B0	All other outdoor lighting, including decorative	U2	U0	> 2 MH from property line	G2	G0	☐	☐
S1	S1	2 MH from property line	No Limit	B0	All other outdoor lighting, including decorative	U2	U0	> 2 MH from property line	G2	G0	☐	☐

[1] FOOTNOTES: Mounting Height is labeled MH in this table.
[2] Authority Having Jurisdiction may ask for Luminaire cut sheets or other documentation to confirm luminaire type, uplight ratings and glare ratings used for compliance per §130.2(b)/ §160.5(c)
[3] BUG ratings with a lower number than the 'Max Allowable' are compliant. Ex. If Max Allowable is Bug Rating B4, then B0, B1, B2 and B3 are all compliant.

STATE OF CALIFORNIA
Outdoor Lighting
CALIFORNIA ENERGY COMMISSION

CERTIFICATE OF COMPLIANCE		NRCC-LTO-E
Project Name: Whitecotton Cottage Rehabilitation	**Report Page:**	**(Page 5 of 10)**
	Date Prepared:	9/1/2026

H. OUTDOOR LIGHTING CONTROLS

This table demonstrates compliance with controls requirements for all new or altered luminaires installed as part of the permit application. For alteration projects, luminaires which are existing to remain (ie untouched) and luminaires which are removed and reinstalled (wiring only) do not need to be included in this table even if they are within the spaces covered by the permit application.
Outdoor lighting for nonresidential buildings, parking garages and common service areas in multifamily buildings must be documented separately from outdoor lighting attached to multifamily buildings and controlled from the inside of a dwelling unit

Mandatory Controls for Nonresidential Occupancies, Parking Garages & Common Areas in Multifamily Buildings

01	02	03	04	05	
Area Description	Shut-Off §130.2(c)1 / §160.5(c)	Auto-Schedule §130.2(c)2 / §160.5(c)	Motion Sensor §130.2(c)3 / §160.5(c)	Field Inspector	
				Pass	Fail
Exterior	Astronomical Timer	Provided	NA: Each Luminaire <= 40 Watts	☐	☐

[1] FOOTNOTE: Text has been abbreviated, please refer to Table 160.5-A to confirm compliance with the specific light source technologies listed.
[2] Authority having jurisdiction may ask for cutsheets or other documentation to confirm compliance of light source.
[3] Recessed luminaires marked for use in fire-rated installations, and recessed luminaires installed in non-insulated ceilings are excepted from ii and iii.

STATE OF CALIFORNIA
Outdoor Lighting
CALIFORNIA ENERGY COMMISSION

CERTIFICATE OF COMPLIANCE		NRCC-LTO-E
Project Name: Whitecotton Cottage Rehabilitation	**Report Page:**	**(Page 6 of 10)**
	Date Prepared:	9/1/2026

I. LIGHTING POWER ALLOWANCE (per §140.7 /§170.2(e))

This table includes areas using allowance calculations per §140.7 /§170.2(e). General Hardscape Allowance is per Table 140.7-A/Table 170.2-R while "Use it or lose it" Allowances are per Table 140.7-B /Table 170.2-S. Indicate which allowances are being used to expand sections for user input. Luminaires that qualify for one of the "Use it or lose it" allowances shall not qualify for another "Use it or lose it" allowance.
Outdoor lighting attached to multifamily buildings and controlled from the inside of a dwelling unit are included in Table H. and are not included here. All other multifamily outdoor lighting is included here.

01			
☒ General Hardscape Allowance Table I (below)	"Use it or lose it" Allowance (select all that apply) (select all that apply)		
	☒ Per Application Table J	☐ Sales Frontage Table K	☐ Ornamental Table L	☒ Per Specific Area Table M

Calculated General Hardscape Lighting Power Allowance per Table 140.7-A for Nonresidential & Hotel/Motel

02	03	04	05	06	07	08	09
Area Description	Area Wattage Allowance (AWA)			Linear Wattage Allowance (LWA)			Total General AWA + LWA (Watts)
	Illuminated Area (ft^2)	Allowed Density (W/ft^2)	Area Allowance (Watts)	Perimeter Length (lf)	Allowed Density (W/lf)	Linear Allowance (Watts)	
Parking Hardscapee	3494	0.019	66.4	257	0.2	38.6	105
Pedestrian Hardscape	1409	0.019	26.8	341	0.2	51.2	78
Utility Area	176	0.019	3.3	54	0.2	8.1	11
Non-sales Canopy	173	0.019	3.3	73	0.2	11	14
Initial Wattage Allowance for Entire Site (Watts):							200
Instances of Initial Wattage Allowance (LZ 0 only)[1]							
Total General Hardscape Allowance (Watts):							460

STATE OF CALIFORNIA
Outdoor Lighting
CALIFORNIA ENERGY COMMISSION

CERTIFICATE OF COMPLIANCE		NRCC-LTO-E
Project Name: Whitecotton Cottage Rehabilitation	**Report Page:**	**(Page 8 of 10)**
	Date Prepared:	9/1/2026

M. LIGHTING ALLOWANCE: PER SPECIFIC AREA

This table includes areas using the wattage allowance per specific area from Table 140.7-B /Table 170.2-S. More than one specific area allowance may be taken in a single project, if applicable. However, multiple specific area allowances may not be taken for the exact same area on the site.

01	02	03	04	05	06	07	08	09	10
Area Description	Specific Area Type per Table 140.7-B	CALCULATED ALLOWANCE (Watts)			DESIGN WATTS				Additional Allowance (Watts)
		Specific Area (ft^2)[1]	Allowed Density (W/ft^2)	Extra Allowance (Watts)	Luminaire Name or Item Tag	Watts per Luminaire	# of Luminaires	Design Watts	
Trash Enclosure	NonSalesCanopy	282	0.1	38.6	S7	30	1	30	30
Total Design Watts for this Area:								30	
Total Allowance (Watts) All Areas:									30

[1] FOOTNOTES: See Table 140.7-B /Table 170.2-S for rules for calculating the specific areas (ft^2 for these additional lighting allowances.
[2] For luminaires indicated in Table F as linear, wattage in column 07 is W/lf instead of Watts/luminaire. Total linear feet should be indicated in column 08 instead of number of luminaires.

N. EXISTING CONDITIONS POWER ALLOWANCE (alterations only)

This section does not apply to this project.

O. DECLARATION OF REQUIRED CERTIFICATES OF INSTALLATION

Selections have been made based on information provided in this document. If any selection has been changed by permit applicant, an explanation should be included in Table E. Additional Remarks. These documents must be provided to the building inspector during construction and can be found online

Form/Title
NRCI-LTO-E - Must be submitted for all buildings

STATE OF CALIFORNIA
Outdoor Lighting
CALIFORNIA ENERGY COMMISSION

CERTIFICATE OF COMPLIANCE		NRCC-LTO-E
Project Name: Whitecotton Cottage Rehabilitation	**Report Page:**	**(Page 9 of 10)**
	Date Prepared:	9/1/2026

P. DECLARATION OF REQUIRED CERTIFICATES OF ACCEPTANCE

Selections have been made based on information provided in this document. If any selection has been changed by permit applicant, an explanation should be included in Table E. Additional Remarks. These documents must be provided to the building inspector during construction and must be completed through an Acceptance Test Technician Certification Provider (ATTCP). For more information visit: http://www.energy.ca.gov/title24/attcp/providers.html

Form/Title	Systems/Spaces To Be Field Verified
NRCA-LTO-02-A - Must be submitted for all outdoor lighting controls except for alterations where controls are added to <= 20 luminaires.	Exterior;

CLIENT

GENERAL SERVICES AGENCY
GSA
COUNTY OF ALAMEDA

ALAMEDA COUNTY

INTERFACE ENGINEERING
PROJECT 2025-1084
CONTACT Philip Nguyen
1999 Harrison Street, Suite 550
Oakland, CA 94612
TEL 415.489.7240
www.interfaceengineering.com

NOTE: If this drawing is not 22"x34" it has been revised from its original size and the scales noted on drawing/details are no longer applicable.

© 2022 Shah Kawasaki Architects

Revision Number	DATE	ISSUE DESCRIPTION
	09/03/2026	PERMIT SET

Project

WHITECOTTON COTTAGE REHABILITATION

15400 FOOTHILL BLVD
SAN LEANDRO, CA 94578

Architect of Record
P&T

Consultant
PAGE & TURNBULL
170 MAIDEN LANE, 5TH FLOOR
SAN FRANCISCO, CA

REGISTERED PROFESSIONAL ENGINEER
JASON LAU
No. E16806
Exp. 09/30/26
ELECTRICAL
STATE OF CALIFORNIA

Drawing Title
TITLE 24 - ELECTRICAL

Drawing No.
E0.05

SKA Project Number: 25001

STATE OF CALIFORNIA

Outdoor Lighting

CALIFORNIA ENERGY COMMISSION

CERTIFICATE OF COMPLIANCE			NRCC-LTO-E
Project Name:	Whitecotton Cottage Rehabilitation	**Report Page:**	**(Page 10 of 10)**
Project Address:	15400 Foothill Blvd	**Date Prepared:**	9/1/2026

DOCUMENTATION AUTHOR'S DECLARATION STATEMENT

I certify that this Certificate of Compliance documentation is accurate and complete.

Documentation Author Name: Jason Lau	Documentation Author Signature:
Company: Interface Engineering	Signature Date: 2026-09-01
Address: 49 Stevenson Street	CEA/HERS/CC Certification Identification (if applicable):
City/State/Zip: San Francisco CA 94105	Phone: 415-489-7240

RESPONSIBLE PERSON'S DECLARATION STATEMENT

I certify the following under penalty of perjury, under the laws of the State of California:

1. The information provided on this Certificate of Compliance is true and correct.
2. I am eligible under Division 3 of the Business and Professions Code to accept responsibility for the building design or system design identified on this Certificate of Compliance (responsible designer)
3. The energy features and performance specifications, materials, components, and manufactured devices for the building design or system design identified on this Certificate of Compliance conform to the requirements of Title 24, Part 1 and Part 6 of the California Code of Regulations.
4. The building design features or system design features identified on this Certificate of Compliance are consistent with the information provided on other applicable compliance documents, worksheets, calculations, plans and specifications submitted to the enforcement agency for approval with this building permit application.
5. I will ensure that a completed signed copy of this Certificate of Compliance shall be made available with the building permit(s) issued for the building, and made available to the enforcement agency for all applicable inspections. I understand that a completed signed copy of this Certificate of Compliance is required to be included with the documentation the builder provides to the building owner at occupancy.

Responsible Person Name: Jason Lau	Responsible Person Signature:
Responsible Person Scope: Jason Lau	
Company: Interface Engineering Inc.	Date Signed: 2026-09-01
Address: 49 Stevenson Street	License: E16806
City/State/Zip: San Francisco CA 94105	Phone: 415-489-7240

CA Building Energy Efficiency Standards - 2025 Nonresidential Compliance

Generated Date/Time:

Report Version: 2025.0.000
Schema Version: rev 20250101

Documentation Software: EnergyPro

Compliance ID: EPR-4822-0926-0002
Report Generated: 2026-09-01 15:02:35

CLIENT

GENERAL SERVICES AGENCY
GSA
COUNTY OF ALAMEDA

ALAMEDA COUNTY

INTERFACE ENGINEERING

PROJECT 2025-1084
CONTACT Philip Nguyen

1999 Harrison Street, Suite 550
Oakland, CA 94612
TEL 415.489.7240
www.interfaceengineering.com

NOTE: If this drawing is not 22"x34" it has been revised from its original size and the scales noted on drawing/details are no longer applicable.

© 2022 Shah Kawasaki Architects

Revision Number	DATE	ISSUE DESCRIPTION
	09/03/2026	PERMIT SET

Project

WHITECOTTON COTTAGE REHABILITATION

15400 FOOTHILL BLVD
SAN LEANDRO, CA 94578

Architect of Record

P&T

Consultant

PAGE & TURNBULL
170 MAIDEN LANE, 5TH FLOOR
SAN FRANCISCO, CA

REGISTERED PROFESSIONAL ENGINEER
JASON LAU
No. E16806
Exp: 09/30/26
ELECTRICAL
STATE OF CALIFORNIA

Drawing Title

TITLE 24 - ELECTRICAL

Drawing No.

E0.06

SKA Project Number: 25001

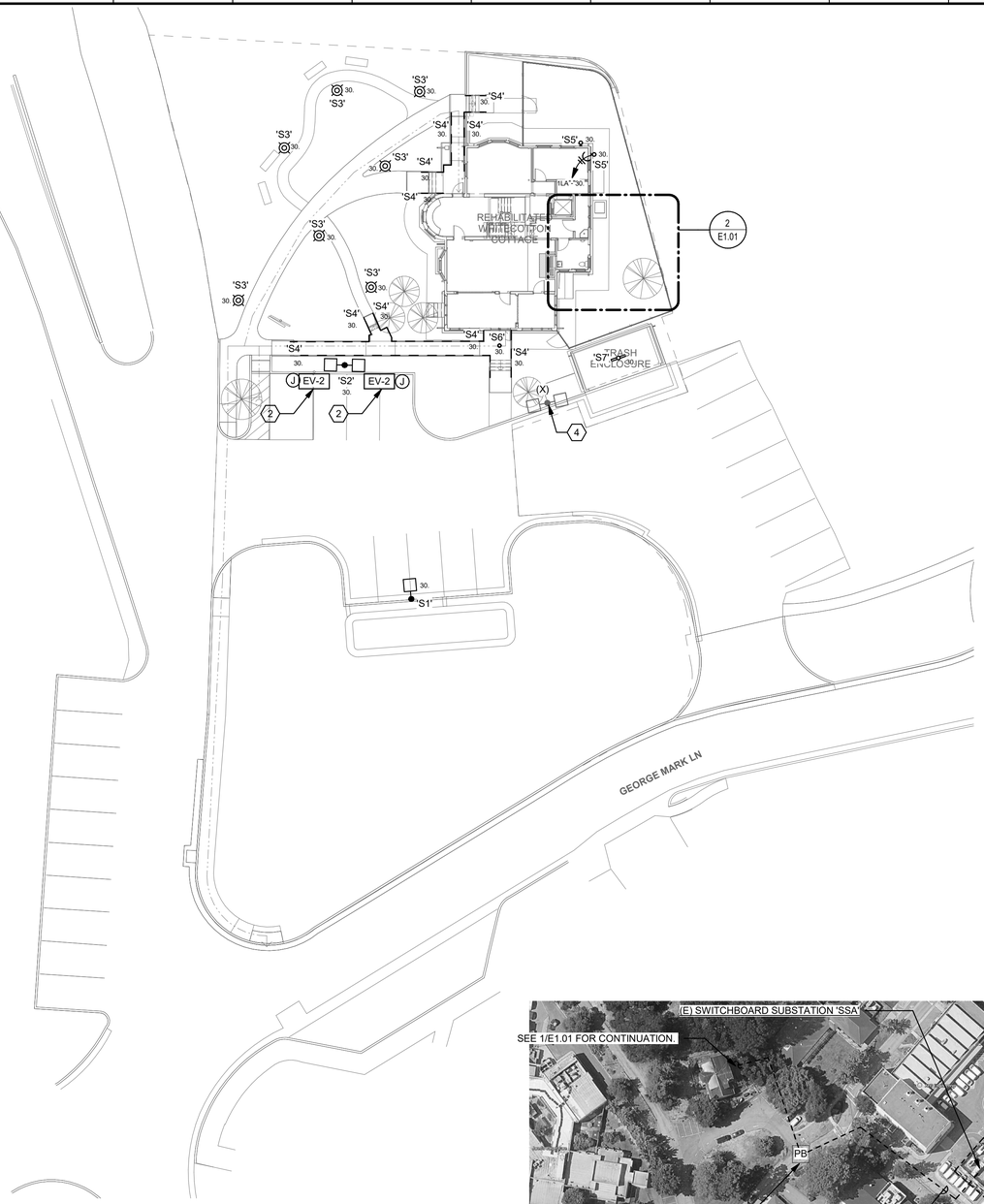

1 PARTIAL SITE PLAN - ELECTRICAL

0' 20' 40'
1" = 20'-0"

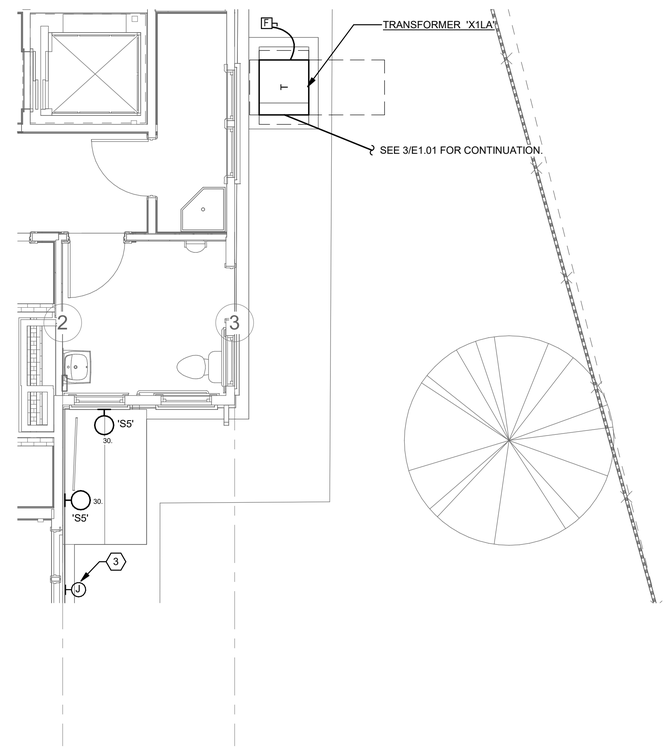

2 ENLARGED SITE PLAN - ELECTRICAL

0' 2' 4' 8'
1/4" = 1'-0"

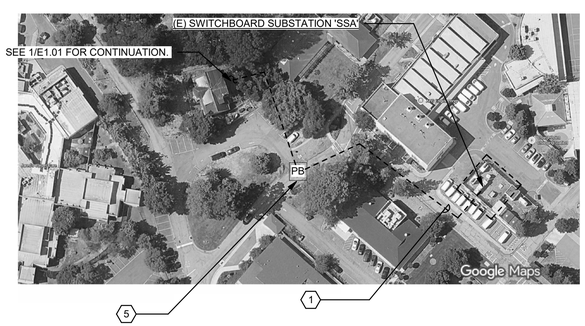

3 OVERALL SITE PLAN - ELECTRICAL

NO SCALE

GENERAL SHEET NOTES

A. COORDINATE DEMOLITION WORK WITH ARCHITECTURAL DRAWINGS PRIOR TO COMMENCEMENT OF WORK.

B. DESIGN DRAWINGS ARE BASED ON ASSESSMENT OF AVAILABLE AS-BUILT DRAWINGS. AS-BUILT DRAWINGS MAY NOT ACCURATELY REFLECT ACTUAL CONDITIONS. FIELD VERIFY ALL CONDITIONS PRIOR TO COMMENCEMENT OF WORK.

SHEET KEYNOTES

1. PROPOSED UNDERGROUND CONDUIT ROUTE. COORDINATE WITH CIVIL ENGINEER FOR EXACT ROUTING. SEE SHEET E4.01 FOR FEEDER SIZES AND REQUIREMENTS. ESTIMATED FEEDER LENGTH IS APPROXIMATELY 450'.
2. DUAL HEAD ELECTRIC VEHICLE CHARGING STATION. COORDINATE EXACT MOUNTING LOCATION WITH ARCHITECT PRIOR TO INSTALLATION. COORDINATE EXACT CONNECTION DETAILS WITH MANUFACTURER (BASIS OF DESIGN: CHARGEPOINT CT4000) PRIOR TO INSTALLATION. PROVIDE 1" CONDUIT STUB UP PER CHARGER HEAD UNDER SLAB FROM PANEL '1LA'.
3. PROVIDE 120V POWER CONNECTION FOR IRRIGATION CONTROLLER. COORDINATE WITH THE LANDSCAPE CONSULTANT FOR EXACT LOCATION.
4. DEMOLISH EXISTING POLE LIGHT. CUT AND CAP CONDUITS TO NEAREST AVAILABLE JUNCTION BOX.
5. PROVIDE 16"WX16"LX6"D UNDERGROUND PULLBOX. NUMBER OF BENDS IN CONDUIT ROUTE SHALL NOT EXCEED 270 DEGREES. COORDINATE EXACT LOCATION OF PULLBOX PRIOR TO INSTALLATION.

CLIENT

GENERAL SERVICES AGENCY GSA COUNTY OF ALAMEDA

ALAMEDA COUNTY

INTERFACE ENGINEERING
PROJECT 2025-1084
CONTACT Philip Nguyen
1999 Harrison Street, Suite 550
Oakland, CA 94612
TEL 415.489.7240
www.interfaceengineering.com

NOTE: If this drawing is not 22"x34" it has been revised from its original size and the scales noted on drawing/details are no longer applicable.

© 2022 Shah Kawasaki Architects

Revision Number	DATE	ISSUE DESCRIPTION
	09/03/2026	PERMIT SET

Project

WHITECOTTON COTTAGE REHABILITATION

15400 FOOTHILL BLVD
SAN LEANDRO, CA 94578

Architect of Record

P&T

Consultant

PAGE & TURNBULL
170 MAIDEN LANE, 5TH FLOOR
SAN FRANCISCO, CA

REGISTERED PROFESSIONAL ENGINEER
JASON LAU
No. E16806
Exp: 09/30/26
ELECTRICAL
STATE OF CALIFORNIA

Drawing Title

SITE PLAN - ELECTRICAL

Drawing No.

E1.01

SKA Project Number: 25001

GENERAL SHEET NOTES:

A. COORDINATE DEMOLITION WORK WITH ARCHITECTURAL DRAWINGS PRIOR TO COMMENCEMENT OF WORK.

B. DESIGN DRAWINGS ARE BASED ON ASSESSMENT OF AVAILABLE AS-BUILT DRAWINGS. AS-BUILT DRAWINGS MAY NOT ACCURATELY REFLECT ACTUAL CONDITIONS. FIELD VERIFY ALL CONDITIONS PRIOR TO COMMENCEMENT OF WORK.

SHEET KEYNOTES

1. EXISTING RECEPTACLES, LUMINAIRES AND LIGHTING CONTROLS, MECHANICAL AND PLUMBING EQUIPMENT TO BE REMOVED. FOR UNUSED CIRCUITS, REMOVE CIRCUIT, CONDUIT AND ASSOCIATED HARDWARE BACK TO PANEL SOURCE.

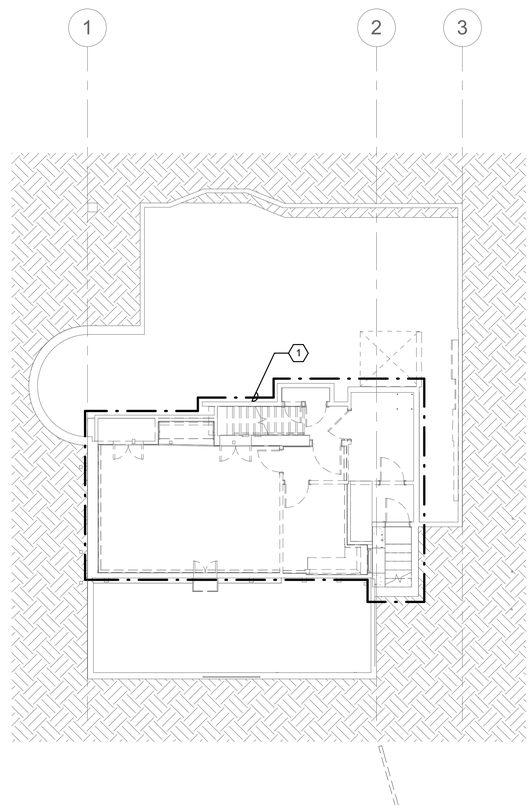

1 BASEMENT DEMOLITION PLAN - ELECTRICAL

0' 4' 8' 16'

1/8" = 1'-0"

CLIENT

GENERAL SERVICES AGENCY GSA COUNTY OF ALAMEDA

ALAMEDA COUNTY

INTERFACE ENGINEERING

PROJECT 2025-1084
CONTACT Philip Nguyen

1999 Harrison Street, Suite 550
Oakland, CA 94612
TEL 415.489.7240
www.interfaceengineering.com

NOTE: If this drawing is not 22"x34" it has been revised from its original size and the scales noted on drawing/details are no longer applicable.

© 2022 Shah Kawasaki Architects

Revision Number	DATE	ISSUE DESCRIPTION
	09/03/2026	PERMIT SET

Project

WHITECOTTON COTTAGE REHABILITATION

15400 FOOTHILL BLVD
SAN LEANDRO, CA 94578

Architect of Record

P&T

Consultant

PAGE & TURNBULL
170 MAIDEN LANE, 5TH FLOOR
SAN FRANCISCO, CA

REGISTERED PROFESSIONAL ENGINEER
JASON LAU
No. E16806
Exp: 09/30/26
ELECTRICAL
STATE OF CALIFORNIA

Drawing Title

BASEMENT DEMOLITION PLAN - ELECTRICAL

Drawing No.

ED1.00

SKA Project Number: 25001

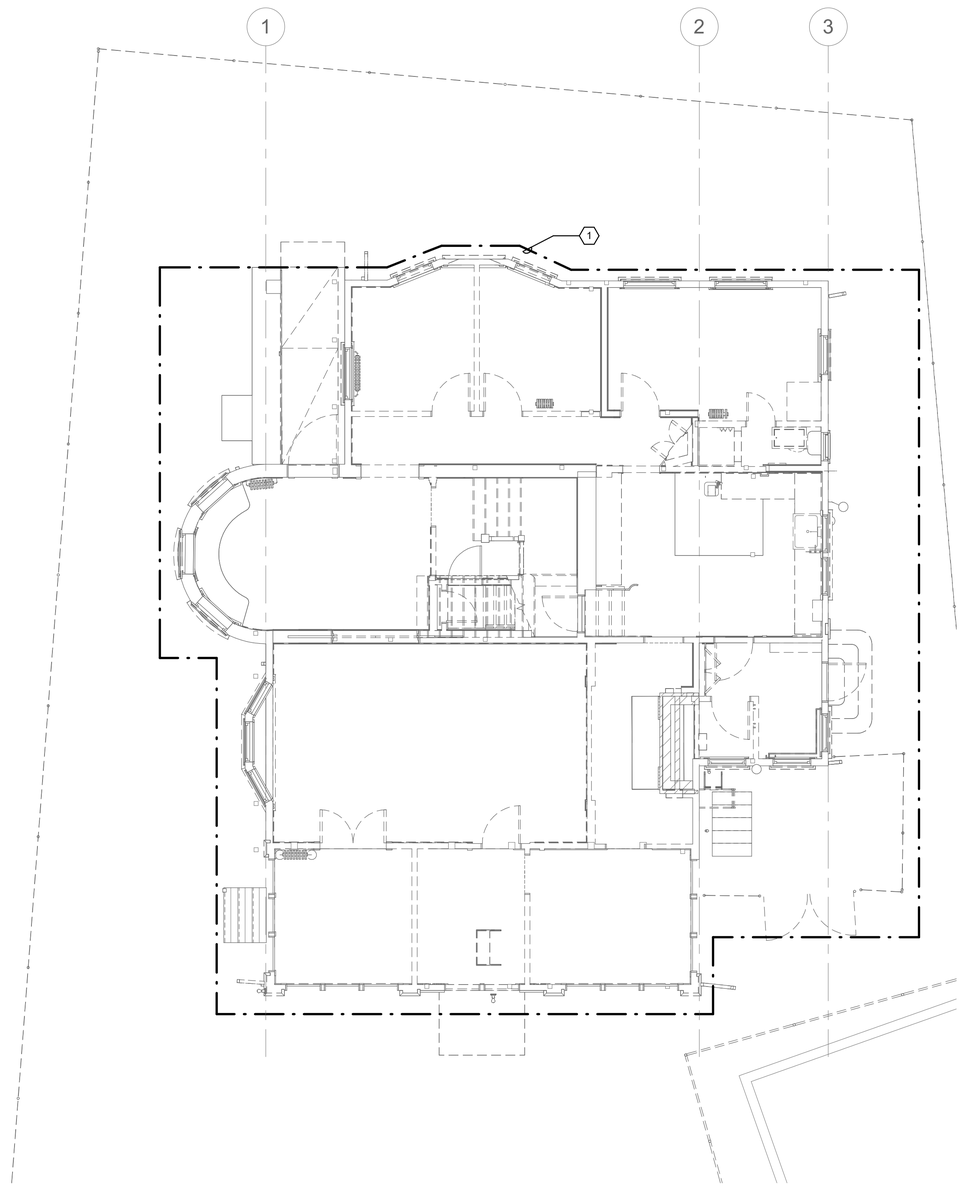

1 LEVEL 1 DEMOLITION PLAN - ELECTRICAL

0' 4' 8' 12'

3/16" = 1'-0"

GENERAL SHEET NOTES:

A. COORDINATE DEMOLITION WORK WITH ARCHITECTURAL DRAWINGS PRIOR TO COMMENCEMENT OF WORK.

B. DESIGN DRAWINGS ARE BASED ON ASSESSMENT OF AVAILABLE AS-BUILT DRAWINGS. AS-BUILT DRAWINGS MAY NOT ACCURATELY REFLECT ACTUAL CONDITIONS. FIELD VERIFY ALL CONDITIONS PRIOR TO COMMENCEMENT OF WORK.

SHEET KEYNOTES

1. EXISTING RECEPTACLES, LUMINAIRES AND LIGHTING CONTROLS, MECHANICAL AND PLUMBING EQUIPMENT TO BE REMOVED. FOR UNUSED CIRCUITS, REMOVE CIRCUIT, CONDUIT AND ASSOCIATED HARDWARE BACK TO PANEL SOURCE.

CLIENT

GENERAL SERVICES AGENCY GSA COUNTY OF ALAMEDA

ALAMEDA COUNTY

INTERFACE ENGINEERING

PROJECT 2025-1084
CONTACT Philip Nguyen

1999 Harrison Street, Suite 550
Oakland, CA 94612
TEL 415.489.7240
www.interfaceengineering.com

NOTE: If this drawing is not 22"x34" it has been revised from its original size and the scales noted on drawing/details are no longer applicable.

© 2022 Shah Kawasaki Architects

Revision Number	DATE	ISSUE DESCRIPTION
	09/03/2026	PERMIT SET

Project

WHITECOTTON COTTAGE REHABILITATION

15400 FOOTHILL BLVD
SAN LEANDRO, CA 94578

Architect of Record

P&T

Consultant

PAGE & TURNBULL
170 MAIDEN LANE, 5TH FLOOR
SAN FRANCISCO, CA

REGISTERED PROFESSIONAL ENGINEER
JASON LAU
No. E16806
Exp: 09/30/26
ELECTRICAL
STATE OF CALIFORNIA

Drawing Title

LEVEL 1 DEMOLITION PLAN - ELECTRICAL

Drawing No.

ED1.01

SKA Project Number: 25001

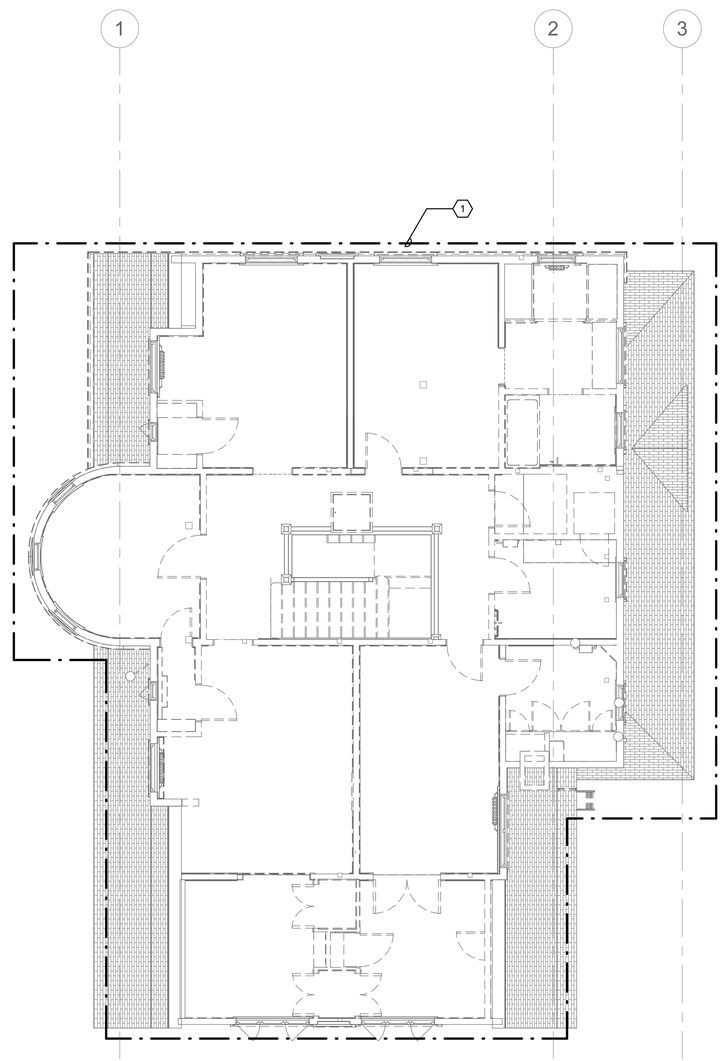

1 LEVEL 2 DEMOLITION PLAN - ELECTRICAL

0' 4' 8' 12'

3/16" = 1'-0"

GENERAL SHEET NOTES:

A. COORDINATE DEMOLITION WORK WITH ARCHITECTURAL DRAWINGS PRIOR TO COMMENCEMENT OF WORK.

B. DESIGN DRAWINGS ARE BASED ON ASSESSMENT OF AVAILABLE AS-BUILT DRAWINGS. AS-BUILT DRAWINGS MAY NOT ACCURATELY REFLECT ACTUAL CONDITIONS. FIELD VERIFY ALL CONDITIONS PRIOR TO COMMENCEMENT OF WORK.

SHEET KEYNOTES

1. EXISTING RECEPTACLES, LUMINAIRES AND LIGHTING CONTROLS, MECHANICAL AND PLUMBING EQUIPMENT TO BE REMOVED. FOR UNUSED CIRCUITS, REMOVE CIRCUIT, CONDUIT AND ASSOCIATED HARDWARE BACK TO PANEL SOURCE.

CLIENT

GENERAL SERVICES AGENCY GSA COUNTY OF ALAMEDA

ALAMEDA COUNTY

INTERFACE ENGINEERING

PROJECT 2025-1084
CONTACT Philip Nguyen

1999 Harrison Street, Suite 550
Oakland, CA 94612
TEL 415.489.7240
www.interfaceengineering.com

NOTE: If this drawing is not 22"x34" it has been revised from its original size and the scales noted on drawing/details are no longer applicable.

© 2022 Shah Kawasaki Architects

Revision Number	DATE	ISSUE DESCRIPTION
	09/03/2026	PERMIT SET

Project

WHITECOTTON COTTAGE REHABILITATION

15400 FOOTHILL BLVD
SAN LEANDRO, CA 94578

Architect of Record

P&T

Consultant

PAGE & TURNBULL
170 MAIDEN LANE, 5TH FLOOR
SAN FRANCISCO, CA

REGISTERED PROFESSIONAL ENGINEER
JASON LAU
No. E16806
Exp: 09/30/26
ELECTRICAL
STATE OF CALIFORNIA

Drawing Title

LEVEL 2 DEMOLITION PLAN - ELECTRICAL

Drawing No.

ED1.02

SKA Project Number: 25001

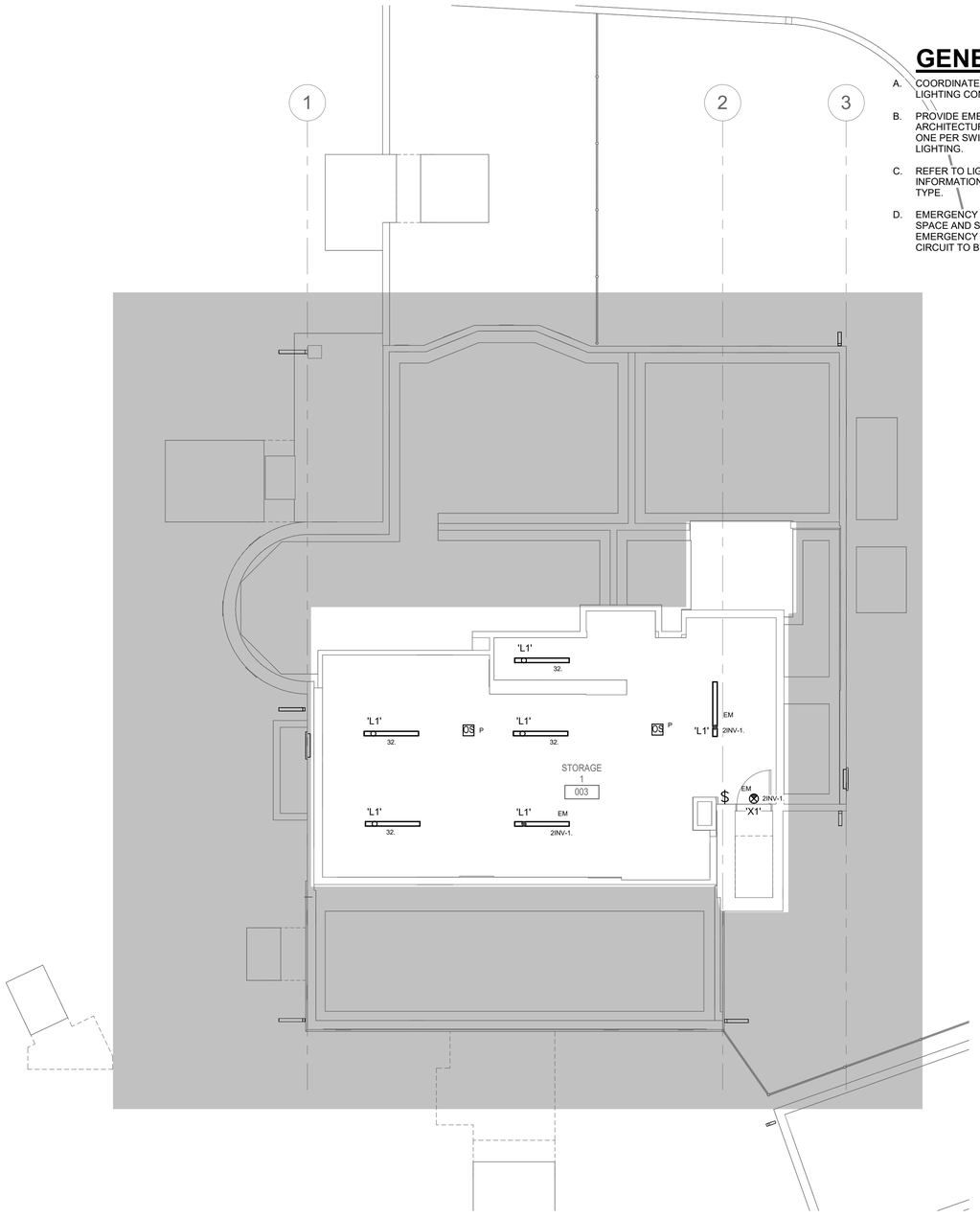

GENERAL SHEET NOTES:

A. COORDINATE EXACT LOCATION AND MOUNTING HEIGHT OF LUMINAIRES AND LIGHTING CONTROLS WITH ARCHITECT PRIOR TO INSTALLATION.

B. PROVIDE EMERGENCY LIGHTING ALONG EGRESS PATHS AS INDICATED ON ARCHITECTURAL LIFE SAFETY PLANS. PROVIDE EMERGENCY LIGHTING RELAY, ONE PER SWITCH LEG WITHIN ROOM SPACE AND/OR AREA WITH EMERGENCY LIGHTING.

C. REFER TO LIGHTING CONTROL MATRIX ON SHEET E0.02 FOR ADDITIONAL INFORMATION ON THE TYPE OF CONTROLS TO BE PROVIDED FOR EACH SPACE TYPE.

D. EMERGENCY LUMINAIRES SWITCHED/DIMMED WITH NORMAL LUMINAIRES IN SPACE AND SHALL OPERATE ON 100% FULL OUTPUT WHEN OPERATING ON EMERGENCY POWER. PROVIDE UL924 RELAY DEVICE FOR EMERGENCY CIRCUIT TO BYPASS CONTROLS DURING POWER OUTAGE.

1 BASEMENT PLAN - LIGHTING

0' 4' 8' 12'

3/16" = 1'-0"

CLIENT

GENERAL SERVICES AGENCY GSA COUNTY OF ALAMEDA

ALAMEDA COUNTY

INTERFACE ENGINEERING

PROJECT 2025-1084
CONTACT Philip Nguyen

1999 Harrison Street, Suite 550
Oakland, CA 94612
TEL 415.489.7240
www.interfaceengineering.com

NOTE: If this drawing is not 22"x34" it has been revised from its original size and the scales noted on drawing/details are no longer applicable.

© 2022 Shah Kawasaki Architects

Revision Number	DATE	ISSUE DESCRIPTION
	09/03/2026	PERMIT SET

Project

WHITECOTTON COTTAGE REHABILITATION

15400 FOOTHILL BLVD
SAN LEANDRO, CA 94578

Architect of Record

P&T

Consultant

PAGE & TURNBULL
170 MAIDEN LANE, 5TH FLOOR
SAN FRANCISCO, CA

REGISTERED PROFESSIONAL ENGINEER
JASON LAU
No. E16806
Exp. 09/30/26
ELECTRICAL
STATE OF CALIFORNIA

Drawing Title

BASEMENT PLAN - LIGHTING

Drawing No.

E2.00

SKA Project Number: 25001

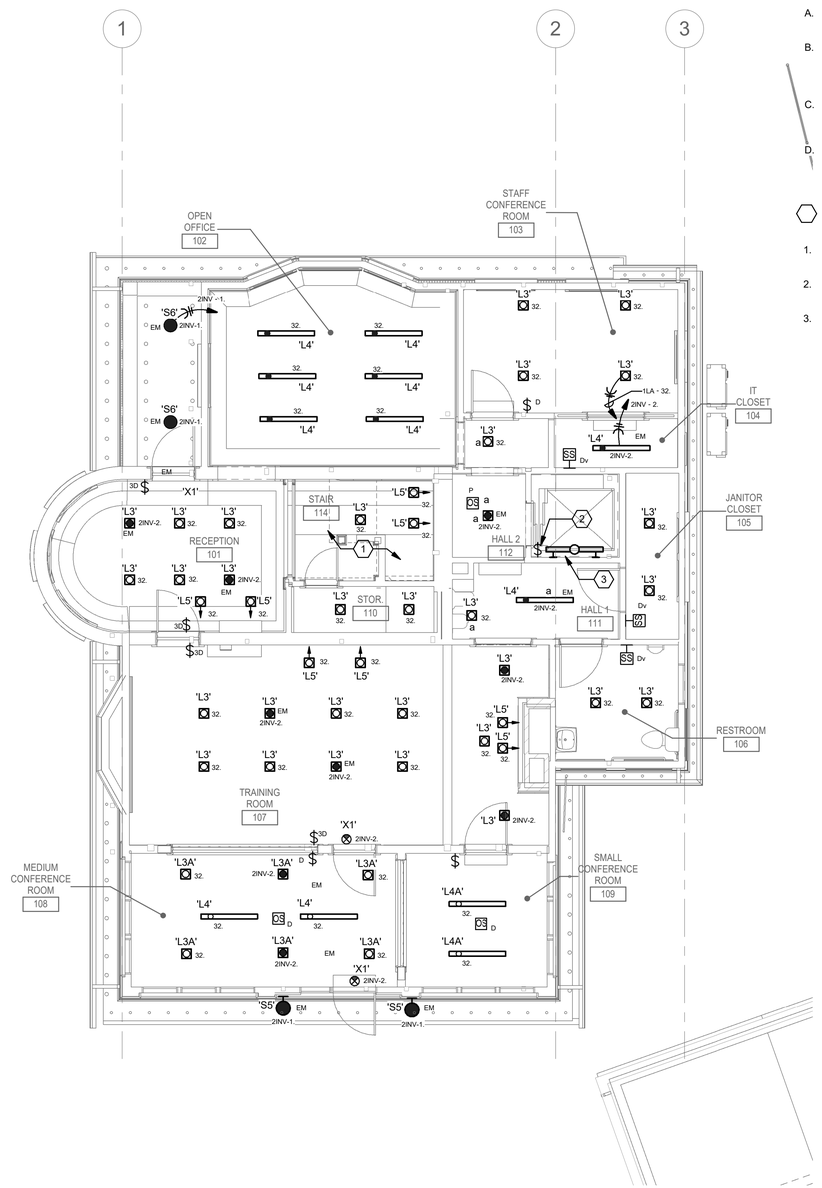

1 LEVEL 01 FLOOR PLAN - LIGHTING

0' 4' 8' 12'

3/16" = 1'-0"

GENERAL SHEET NOTES:

A. COORDINATE EXACT LOCATION AND MOUNTING HEIGHT OF LUMINAIRES AND LIGHTING CONTROLS WITH ARCHITECT PRIOR TO INSTALLATION.

B. PROVIDE EMERGENCY LIGHTING ALONG EGRESS PATHS AS INDICATED ON ARCHITECTURAL LIFE SAFETY PLANS. PROVIDE EMERGENCY LIGHTING RELAY, ONE PER SWITCH LEG WITHIN ROOM SPACE AND/OR AREA WITH EMERGENCY LIGHTING.

C. REFER TO LIGHTING CONTROL MATRIX ON SHEET E0.02 FOR ADDITIONAL INFORMATION ON THE TYPE OF CONTROLS TO BE PROVIDED FOR EACH SPACE TYPE.

D. EMERGENCY LUMINAIRES SWITCHED/DIMMED WITH NORMAL LUMINAIRES IN SPACE AND SHALL OPERATE ON 100% FULL OUTPUT WHEN OPERATING ON EMERGENCY POWER. PROVIDE UL924 RELAY DEVICE FOR EMERGENCY CIRCUIT TO BYPASS CONTROLS DURING POWER OUTAGE.

SHEET KEYNOTES

1. SEE LEVEL ABOVE (SHEET E2.02) FOR LIGHTING ABOVE STAIRWAY.
2. PROVIDE WEATHERPROOF TOGGLE SWITCH FOR PIT LIGHTING CIRCUIT BY TOP OF PIT LADDER.
3. PROVIDE NEMA 4 SURFACE MOUNTED LED GASKETED LUMINAIRE FOUR FOOT WHITE POLYCARBONATE HOUSING WITH POLYCARBONATE DIFFUSER. LED, NOMINAL 6000 LUMENS, 4000K. BEGHELLI ILLUMINA SERIES, MATALUX, DAYBRITE, HUBBELL, LIGHTOLIER OR APPROVED. TYPICAL OF FOUR. MOUNT ONE LUMINAIRE ON EACH WALL. AVOID LOCATION LUMINAIRES DIRECTLY BEHIND BEAMS OR STRUCTURE THAT WOULD BLOCK LIGHT. WIRING SHALL BE IDENTIFIED FOR WET LOCATIONS.

CLIENT

GENERAL SERVICES AGENCY COUNTY OF ALAMEDA GSA

ALAMEDA COUNTY

INTERFACE ENGINEERING
PROJECT 2025-1084
CONTACT Philip Nguyen
1999 Harrison Street, Suite 550
Oakland, CA 94612
TEL 415.489.7240
www.interfaceengineering.com

NOTE: If this drawing is not 22"x34" it has been revised from its original size and the scales noted on drawing/details are no longer applicable.

© 2022 Shah Kawasaki Architects

Revision Number	DATE	ISSUE DESCRIPTION
	09/03/2026	PERMIT SET

Project

WHITECOTTON COTTAGE REHABILITATION

15400 FOOTHILL BLVD
SAN LEANDRO, CA 94578

Architect of Record

P&T

Consultant

PAGE & TURNBULL
170 MAIDEN LANE, 5TH FLOOR
SAN FRANCISCO, CA

REGISTERED PROFESSIONAL ENGINEER
JASON LAU
No. E16806
Exp: 09/30/26
ELECTRICAL
STATE OF CALIFORNIA

Drawing Title

LEVEL 01 FLOOR PLAN - LIGHTING

Drawing No.

E2.01

SKA Project Number: 25001

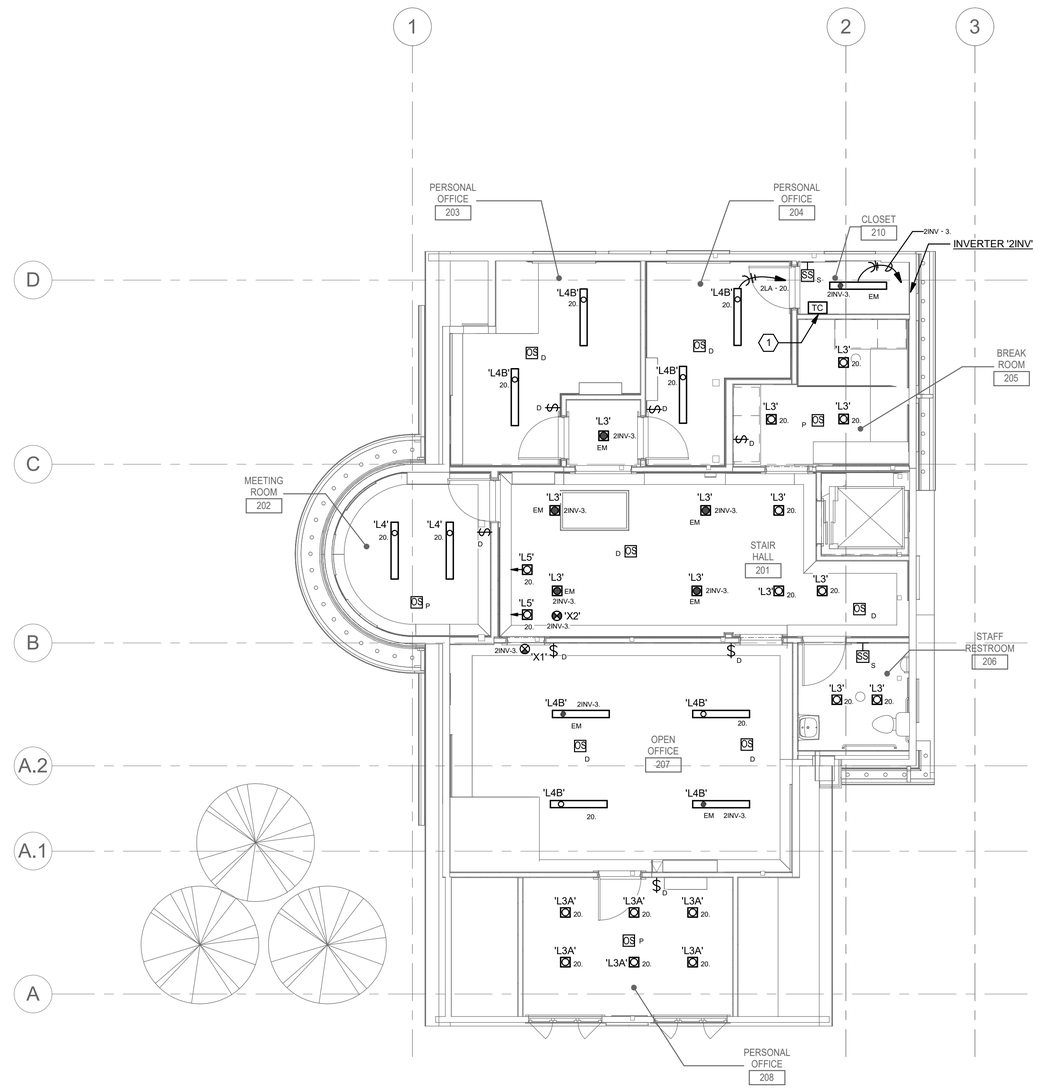

1 LEVEL 02 FLOOR PLAN - LIGHTING

0' 4' 8' 12'
3/16" = 1'-0"

GENERAL SHEET NOTES

A. COORDINATE EXACT LOCATION AND MOUNTING HEIGHT OF LUMINAIRES AND LIGHTING CONTROLS WITH ARCHITECT PRIOR TO INSTALLATION.

B. PROVIDE EMERGENCY LIGHTING ALONG EGRESS PATHS AS INDICATED ON ARCHITECTURAL LIFE SAFETY PLANS. PROVIDE EMERGENCY LIGHTING RELAY, ONE PER SWITCH LEG WITHIN ROOM SPACE AND/OR AREA WITH EMERGENCY LIGHTING.

C. REFER TO LIGHTING CONTROL MATRIX ON SHEET E0.02 FOR ADDITIONAL INFORMATION ON THE TYPE OF CONTROLS TO BE PROVIDED FOR EACH SPACE TYPE.

D. EMERGENCY LUMINAIRES SWITCHED/DIMMED WITH NORMAL LUMINAIRES IN SPACE AND SHALL OPERATE ON 100% FULL OUTPUT WHEN OPERATING ON EMERGENCY POWER. PROVIDE UL924 RELAY DEVICE FOR EMERGENCY CIRCUIT TO BYPASS CONTROLS DURING POWER OUTAGE.

SHEET KEYNOTES

1. PROVIDE INTERMATIC DIGITAL TIMECLOCK FOR AUTO SCHEDULING OF LIGHTING CONTROLS WITHIN THE BUILDING. COORDINATE EXACT LOCATION WITH THE ARCHITECT.

CLIENT

GENERAL SERVICES AGENCY GSA COUNTY OF ALAMEDA

ALAMEDA COUNTY

INTERFACE ENGINEERING
PROJECT 2025-1084
CONTACT Philip Nguyen
1999 Harrison Street, Suite 550
Oakland, CA 94612
TEL 415.489.7240
www.interfaceengineering.com

NOTE: If this drawing is not 22"x34" it has been revised from its original size and the scales noted on drawing/details are no longer applicable.

© 2022 Shah Kawasaki Architects

Revision Number	DATE	ISSUE DESCRIPTION
	09/03/2026	PERMIT SET

Project

WHITECOTTON COTTAGE REHABILITATION

15400 FOOTHILL BLVD
SAN LEANDRO, CA 94578

Architect of Record

P&T

Consultant

PAGE & TURNBULL
170 MAIDEN LANE, 5TH FLOOR
SAN FRANCISCO, CA

REGISTERED PROFESSIONAL ENGINEER
JASON LAU
No. E16806
Exp. 09/30/26
ELECTRICAL
STATE OF CALIFORNIA

Drawing Title

LEVEL 02 FLOOR PLAN - LIGHTING

Drawing No.

E2.02

SKA Project Number: 25001

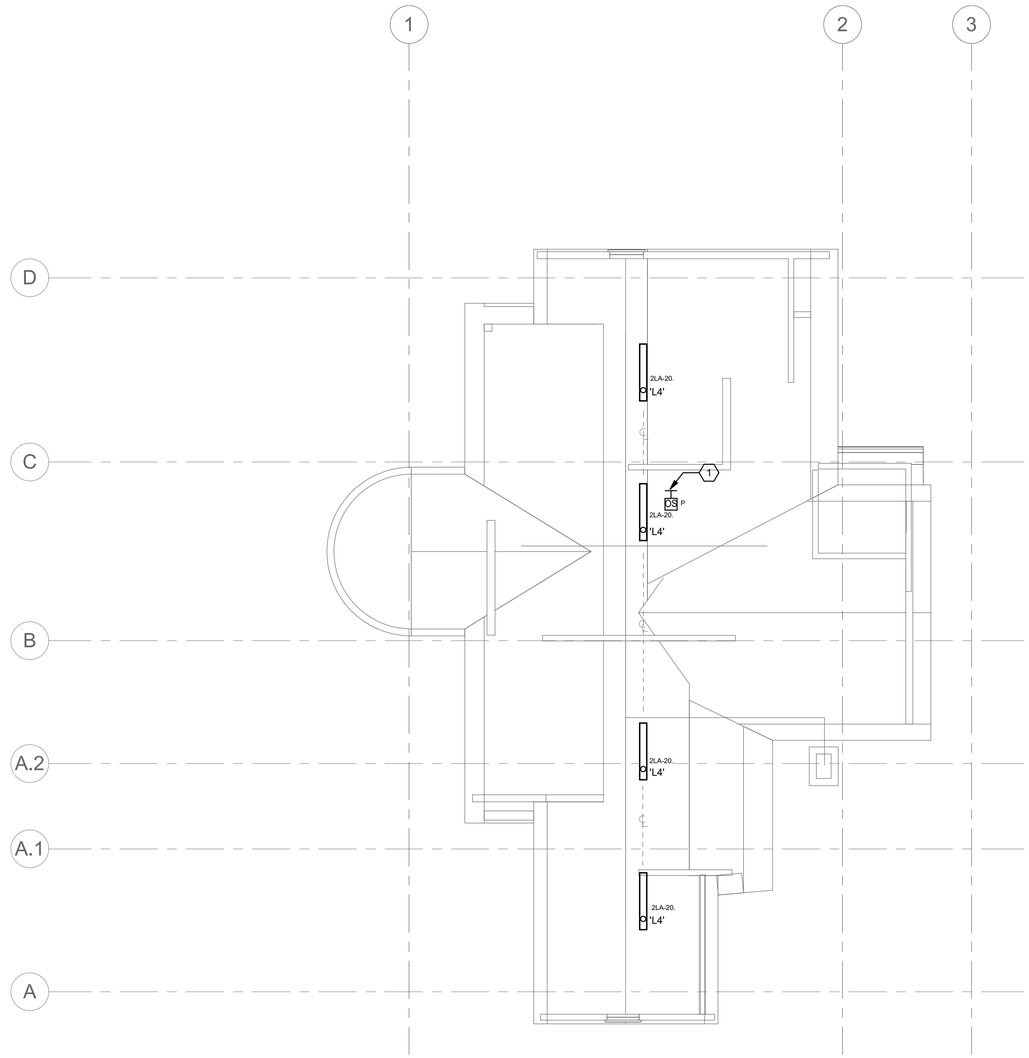

1 ATTIC FLOOR PLAN - LIGHTING

0' 4' 8' 16'

3/16" = 1'-0"

GENERAL SHEET NOTES

A. COORDINATE EXACT LOCATION AND MOUNTING HEIGHT OF LUMINAIRES AND LIGHTING CONTROLS WITH ARCHITECT PRIOR TO INSTALLATION.

B. PROVIDE EMERGENCY LIGHTING ALONG EGRESS PATHS AS INDICATED ON ARCHITECTURAL LIFE SAFETY PLANS. PROVIDE EMERGENCY LIGHTING RELAY, ONE PER SWITCH LEG WITHIN ROOM SPACE AND/OR AREA WITH EMERGENCY LIGHTING.

C. REFER TO LIGHTING CONTROL MATRIX ON SHEET E0.02 FOR ADDITIONAL INFORMATION ON THE TYPE OF CONTROLS TO BE PROVIDED FOR EACH SPACE TYPE.

D. EMERGENCY LUMINAIRES SWITCHED/DIMMED WITH NORMAL LUMINAIRES IN SPACE AND SHALL OPERATE ON 100% FULL OUTPUT WHEN OPERATING ON EMERGENCY POWER. PROVIDE UL924 RELAY DEVICE FOR EMERGENCY CIRCUIT TO BYPASS CONTROLS DURING POWER OUTAGE.

SHEET KEYNOTES

1. WALL MOUNTED OCCUPANCY SENSOR LOCATED ON STUD WALL BUILD OUT BY THE ARCHITECT. DRAWINGS ARE DIAGRAMMATIC IN NATURE, SEE ARCHITECTURAL DRAWINGS FOR EXACT DETAILS.

CLIENT

GENERAL SERVICES AGENCY GSA COUNTY OF ALAMEDA

ALAMEDA COUNTY

INTERFACE ENGINEERING

PROJECT 2025-1084
CONTACT Philip Nguyen

1999 Harrison Street, Suite 550
Oakland, CA 94612
TEL 415.489.7240
www.interfaceengineering.com

NOTE: If this drawing is not 22"x34" it has been revised from its original size and the scales noted on drawing/details are no longer applicable.

© 2022 Shah Kawasaki Architects

Revision Number	DATE	ISSUE DESCRIPTION
	09/03/2026	PERMIT SET

Project

WHITECOTTON COTTAGE REHABILITATION

15400 FOOTHILL BLVD
SAN LEANDRO, CA 94578

Architect of Record

P&T

Consultant

PAGE & TURNBULL
170 MAIDEN LANE, 5TH FLOOR
SAN FRANCISCO, CA

REGISTERED PROFESSIONAL ENGINEER
JASON LAU
No. E16806
Exp: 09/30/26
ELECTRICAL
STATE OF CALIFORNIA

Drawing Title

ATTIC FLOOR PLAN - LIGHTING

Drawing No.

E2.03

SKA Project Number: 25001

GENERAL SHEET NOTES:

A. COORDINATE EXACT LOCATION AND MOUNTING HEIGHT OF RECEPTACLE OUTLETS AND ELECTRICAL DEVICES WITH ARCHITECT PRIOR TO INSTALLATION.

B. COORDINATE EXACT LOCATION AND POWER REQUIREMENTS OF HVAC UNITS WITH DIVISION 23 PRIOR TO INSTALLATION. PROVIDE MAINTENANCE RECEPTACLE WITHIN 25' OF EACH EQUIPMENT PER CEC ARTICLE 210.63.

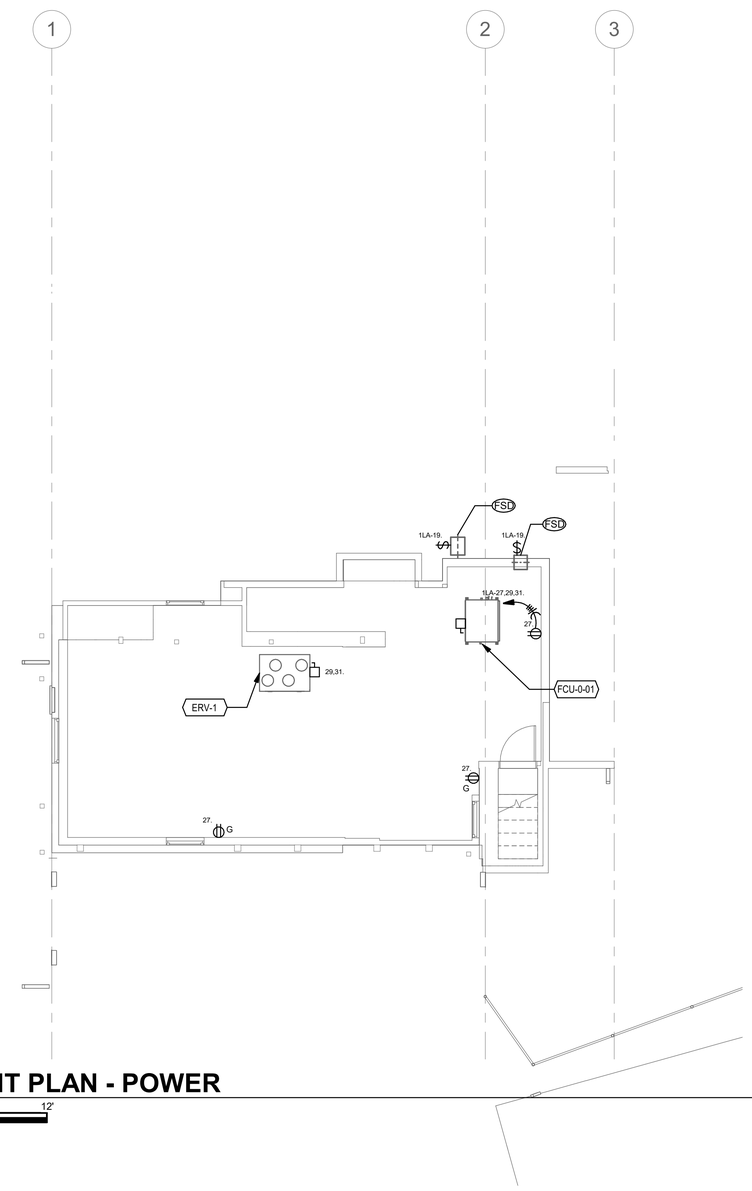

1 BASEMENT PLAN - POWER

0' 4' 8' 12'

3/16" = 1'-0"

CLIENT

ALAMEDA COUNTY

INTERFACE ENGINEERING

PROJECT 2025-1084
CONTACT Philip Nguyen

1999 Harrison Street, Suite 550
Oakland, CA 94612
TEL 415.489.7240
www.interfaceengineering.com

NOTE: If this drawing is not 22"x34" it has been revised from its original size and the scales noted on drawing/details are no longer applicable.

© 2022 Shah Kawasaki Architects

Revision Number	DATE	ISSUE DESCRIPTION
	09/03/2026	PERMIT SET

Project

WHITECOTTON COTTAGE REHABILITATION

15400 FOOTHILL BLVD
SAN LEANDRO, CA 94578

Architect of Record

P&T

Consultant

PAGE & TURNBULL
170 MAIDEN LANE, 5TH FLOOR
SAN FRANCISCO, CA

REGISTERED PROFESSIONAL ENGINEER
JASON LAU
No. E16806
Exp: 09/30/26
ELECTRICAL
STATE OF CALIFORNIA

Drawing Title

BASEMENT PLAN - POWER

Drawing No.

E3.00

SKA Project Number: 25001

GENERAL SHEET NOTES:

A. COORDINATE EXACT LOCATION AND MOUNTING HEIGHT OF RECEPTACLE OUTLETS AND ELECTRICAL DEVICES WITH ARCHITECT PRIOR TO INSTALLATION.

B. COORDINATE EXACT LOCATION AND POWER REQUIREMENTS OF PLUMBING EQUIPMENT WITH DIVISION 22 PRIOR TO INSTALLATION.

C. COORDINATE EXACT LOCATION AND POWER REQUIREMENTS OF HVAC UNITS WITH DIVISION 23 PRIOR TO INSTALLATION. PROVIDE MAINTENANCE RECEPTACLE WITHIN 25' OF EACH EQUIPMENT PER CEC ARTICLE 210.63.

SHEET KEYNOTES

1. PROVIDE FUSED DISCONNECT AND 208V/3PH-4W CONNECTION FOR ELEVATOR CONTROL DRIVE MOTOR.
2. LOCATE FOR ELEVATOR DOOR BUCK CABINET.
3. LOCATE 120V POWER FOR SECURITY PANELS.
4. LOCATE 120V POWER FOR IT RACK.

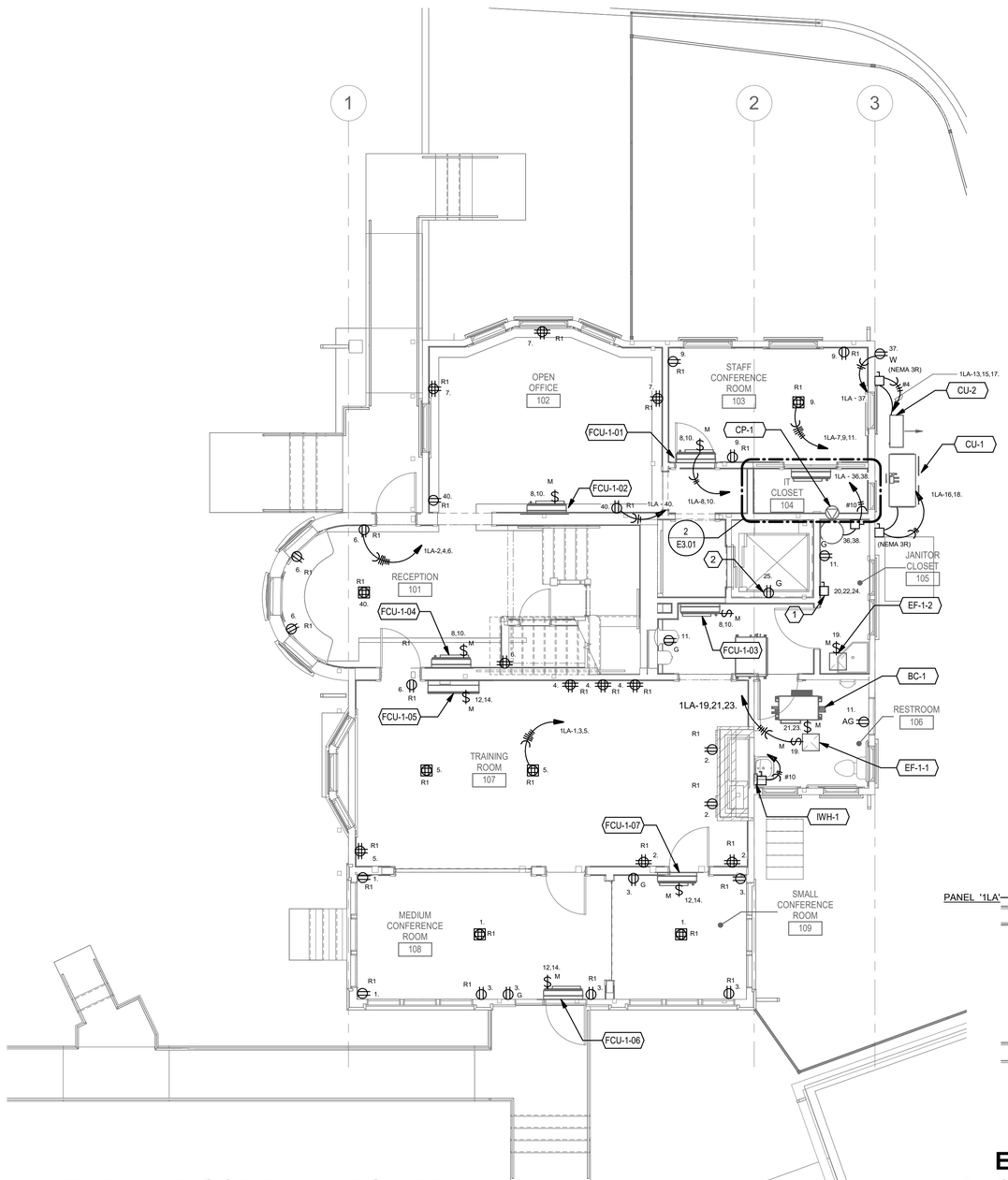

1 LEVEL 01 FLOOR PLAN - POWER

0' 4' 8' 12'
3/16" = 1'-0"

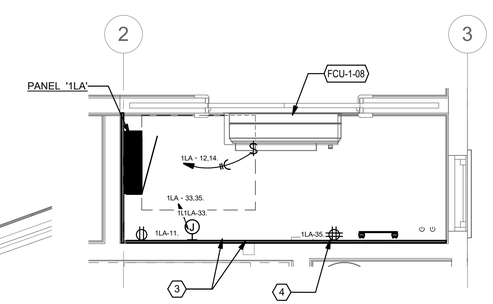

2 ENLARGED IT CLOSET 104 - POWER

0' 2' 4' 8'
1/2" = 1'-0"

CLIENT

GENERAL SERVICES AGENCY COUNTY OF ALAMEDA

ALAMEDA COUNTY

INTERFACE ENGINEERING

PROJECT 2025-1084
CONTACT Philip Nguyen

1999 Harrison Street, Suite 550
Oakland, CA 94612
TEL 415.489.7240
www.interfaceengineering.com

NOTE: If this drawing is not 22"x34" it has been revised from its original size and the scales noted on drawing/details are no longer applicable.

© 2022 Shah Kawasaki Architects

Revision Number	DATE	ISSUE DESCRIPTION
	09/03/2026	PERMIT SET

Project

WHITECOTTON COTTAGE REHABILITATION

15400 FOOTHILL BLVD
SAN LEANDRO, CA 94578

Architect of Record

P&T

Consultant

PAGE & TURNBULL
170 MAIDEN LANE, 5TH FLOOR
SAN FRANCISCO, CA

REGISTERED PROFESSIONAL ENGINEER
JASON LAU
No. E16806
Exp. 09/30/26
ELECTRICAL
STATE OF CALIFORNIA

Drawing Title
LEVEL 01 FLOOR PLAN - POWER

Drawing No.
E3.01

SKA Project Number: 25001

GENERAL SHEET NOTES:

A. COORDINATE EXACT LOCATION AND MOUNTING HEIGHT OF RECEPTACLE OUTLETS AND ELECTRICAL DEVICES WITH ARCHITECT PRIOR TO INSTALLATION.

B. COORDINATE EXACT LOCATION AND POWER REQUIREMENTS OF PLUMBING EQUIPMENT WITH DIVISION 22 PRIOR TO INSTALLATION.

C. COORDINATE EXACT LOCATION AND POWER REQUIREMENTS OF HVAC UNITS WITH DIVISION 23 PRIOR TO INSTALLATION. PROVIDE MAINTENANCE RECEPTACLE WITHIN 25' OF EACH EQUIPMENT PER CEC ARTICLE 210.63.

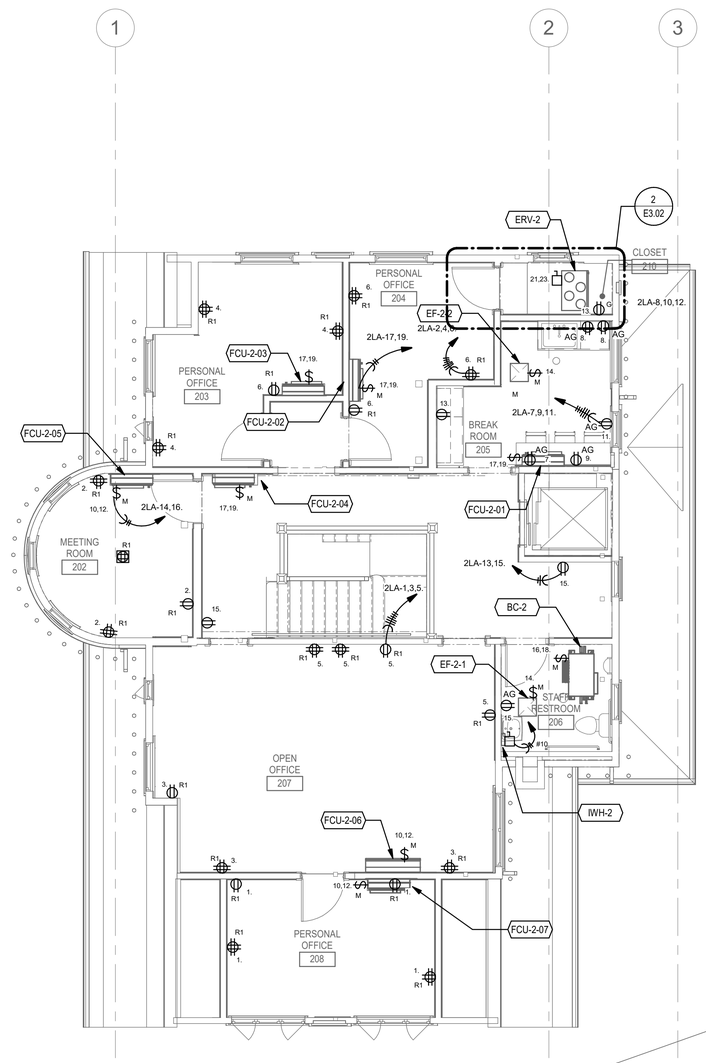

1 LEVEL 02 FLOOR PLAN - POWER

0' 4' 8' 12'

3/16" = 1'-0"

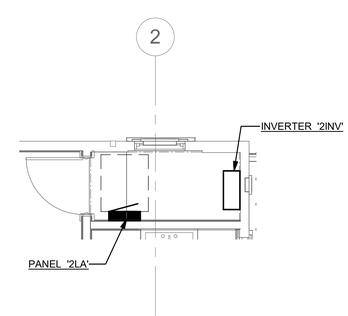

2 ENLARGED CLOSET 210 - POWER

0' 4' 8' 16'

1/4" = 1'-0"

CLIENT

GENERAL SERVICES AGENCY
GSA
COUNTY OF ALAMEDA

ALAMEDA COUNTY

INTERFACE ENGINEERING

PROJECT 2025-1084
CONTACT Philip Nguyen

1999 Harrison Street, Suite 550
Oakland, CA 94612
TEL 415.489.7240
www.interfaceengineering.com

NOTE: If this drawing is not 22"x34" it has been revised from its original size and the scales noted on drawing/details are no longer applicable.

© 2022 Shah Kawasaki Architects

Revision Number	DATE	ISSUE DESCRIPTION
	09/03/2026	PERMIT SET

Project

WHITECOTTON COTTAGE REHABILITATION

15400 FOOTHILL BLVD
SAN LEANDRO, CA 94578

Architect of Record

P&T

Consultant

PAGE & TURNBULL
170 MAIDEN LANE, 5TH FLOOR
SAN FRANCISCO, CA

REGISTERED PROFESSIONAL ENGINEER
JASON LAU
No. E16806
Exp: 09/30/26
ELECTRICAL
STATE OF CALIFORNIA

Drawing Title

LEVEL 02 FLOOR PLAN - POWER

Drawing No.

E3.02

SKA Project Number: 25001

FEEDER SCHEDULE

Key

A, C, S, X	A = Aluminum C = Conduit only S = Service secondary X = Separately derived system
202	2 #12 CU, 1 #12 CU GND., IN 3/4" C.
1504	4 #1/0 CU, 1 #6 CU GND., IN 2" C.
1753	3 #2/0 CU, 1 #6 CU GND., IN 2" C.
4004	2 SETS OF (4 #3/0 CU, 1 #2 CU GND., IN 2" C.)
4004X	2 SETS OF (4 #3/0 CU, 1 #2 CU GND., IN 2" C.)

SHEET KEYNOTES

1. PROVIDE NEW 175A/3P BREAKER IN EXISTING SUBSTATION SWITCHBOARD 'SSA'. NEW BREAKER SHALL MATCH EXISTING MANUFACTURER TYPE AND AIC RATING.
2. PROVIDE EATON POW-R-LINE PXBCM SERIES PANELBOARD (OR APPROVED EQUIVALENT) COMPLETE WITH BRANCH CIRCUIT MONITORING SOLUTION.
3. PROVIDE MEYERS ILLUMINATOR EM INVERTER (BASIS OF DESIGN).

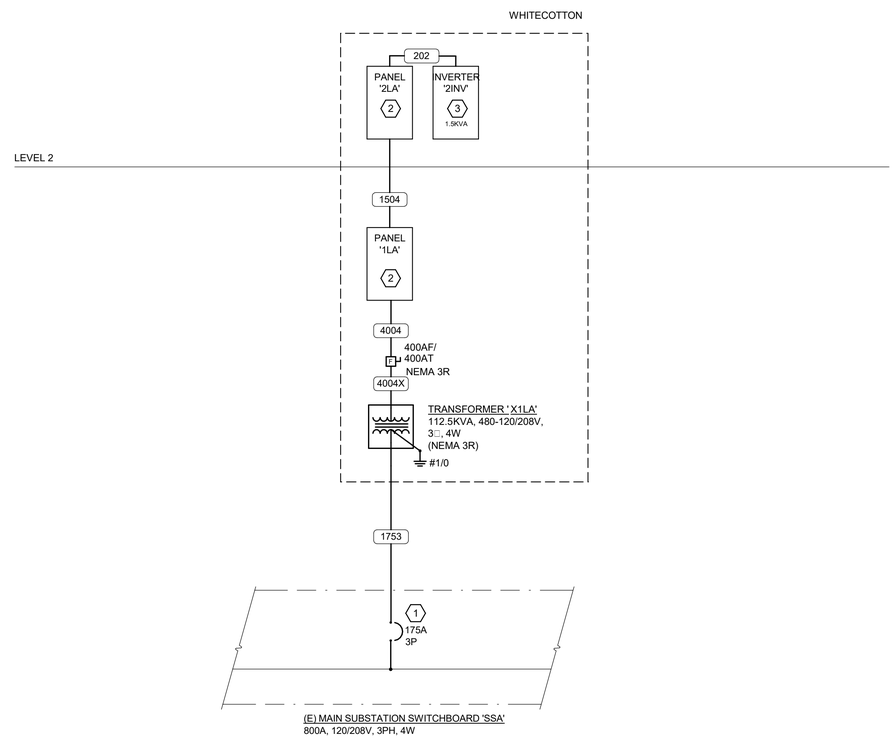

1 PARTIAL SINGLE LINE DIAGRAM - ELECTRICAL

NO SCALE

MECHANICAL EQUIPMENT CONNECTION SCHEDULE

ITEM	DESCRIPTION	LOCATION	VOLTS / PHASE	LOAD	MCA	MOCP	WIRE / CONDUIT	PANEL SOURCE	NOTES
FCU-1-01	FAN COIL UNIT	103 - CONF	208/1		2	20	202	1LA	
FCU-1-02	FAN COIL UNIT	102 - OFFICE	208/1		2	20	202	1LA	
FCU-1-03	FAN COIL UNIT	105 - ELEV LOBBY	208/1		2	20	202	1LA	
FCU-1-04	FAN COIL UNIT	101 - RECEPTION	208/1		2	20	202	1LA	
FCU-1-05	FAN COIL UNIT	108 - TRAINING	208/1		2	20	202	1LA	
FCU-1-06	FAN COIL UNIT	110 - CONF	208/1		2	20	202	1LA	
FCU-1-07	FAN COIL UNIT	109 - CONF	208/1		2	20	202	1LA	
FCU-1-08	FAN COIL UNIT	104 - IT	208/1		2	20	202	1LA	
FCU-2-01	FAN COIL UNIT	205 - BREAK	208/1		2	20	202	2LA	
FCU-2-02	FAN COIL UNIT	204 - OFFICE	208/1		2	20	202	2LA	
FCU-2-03	FAN COIL UNIT	203 - OFFICE	208/1		2	20	202	2LA	
FCU-2-04	FAN COIL UNIT	201 - HALL	208/1		2	20	202	2LA	
FCU-2-05	FAN COIL UNIT	202 - MEETING	208/1		2	20	202	2LA	
FCU-2-06	FAN COIL UNIT	208 - OFFICE	208/1		2	20	202	2LA	
FCU-2-07	FAN COIL UNIT	209 - OFFICE	208/1		2	20	202	2LA	
FCU-0-01	FAN COIL UNIT	BASEMENT	208/1		2	202	202	2LA	
CU-1	CONDENSING UNIT	LEVEL 1	208/3		60	100	603	1LA	
CU-2	CONDENSING UNIT	ELEVATOR	208/1		10	202	202	2LA	
EF-1-1	EXHAUST FAN	RESTROOM	120/1	2.0 A		20	202	1LA	
EF-1-2	EXHAUST FAN	JANITOR	120/1	2.0 A		20	202	1LA	
EF-2-1	EXHAUST FAN	RESTROOM	120/1	2.0 A		20	202	2LA	
EF-2-2	EXHAUST FAN	BREAK	120/1	2.0 A		20	202	2LA	
BC-1	VRF BRANCH CONTROLLER	LEVEL 1	208/1		0.13	20	202	1LA	
BC-2	VRF BRANCH CONTROLLER	LEVEL 2	208/1		0.13	20	202	2LA	
ERV-1	ENERGY RECOVERY UNIT	LEVEL 1	208/1		10	20	202	1LA	
ERV-2	ENERGY RECOVERY UNIT	LEVEL 2	208/1		10	20	202	2LA	

GENERAL MECHANICAL EQUIPMENT CONNECTION SCHEDULE NOTES

A. THE ABOVE INFORMATION IS FOR A SPECIFIC MANUFACTURER. ACTUAL MANUFACTURER FOR EQUIPMENT MAY BE DIFFERENT. COORDINATE WITH MECHANICAL EQUIPMENT SUBMITTALS FOR LOADS AND OVER CURRENT PROTECTION REQUIREMENTS PRIOR TO INSTALLATION OF WIRING.

B. MOCP = MAXIMUM OVER CURRENT PROTECTION
MCA = MINIMUM CIRCUIT AMPACITY

C. PROVIDE DISCONNECTING MEANS FOR EACH ITEM OF EQUIPMENT LISTED IN THE SCHEDULE ABOVE, EXCEPT AS SPECIFICALLY NOTED OTHERWISE IN SCHEDULE NOTES, BELOW.

WIRE / CONDUIT SCHEDULE

202 2 #12 CU, 1 #12 CU GND., IN 3/4" C.
603 3 #4 CU, 1 #10 CU GND., IN 1" C.

PLUMBING EQUIPMENT CONNECTION SCHEDULE

ITEM	DESCRIPTION	LOCATION	VOLTS / PHASE	LOAD	MCA	MOCP	WIRE / CONDUIT	PANEL SOURCE	NOTES
HPWH-1	HEAT PUMP WATER HEATER	JAN. CLOSET 105	208/1	5.0 KW		30	302	1LA	
IWH-1	TANKLESS WATER HEATER	RESTROOM 106	208/1	4.2 KW		30	302	1LA	
IWH-2	TANKLESS WATER HEATER	RESTROOM 206	208/1	4.2 KW		30	302	2LA	
CP-1	CICURLATION PUMP	JAN. CLOSET 105	120/1	10.0 W	10	20	202	1LA	

GENERAL PLUMBING EQUIPMENT CONNECTION SCHEDULE NOTES

A. THE ABOVE INFORMATION IS FOR A SPECIFIC MANUFACTURER. ACTUAL MANUFACTURER FOR EQUIPMENT MAY BE DIFFERENT. COORDINATE WITH MECHANICAL EQUIPMENT SUBMITTALS FOR LOADS AND OVER CURRENT PROTECTION REQUIREMENTS PRIOR TO INSTALLATION OF WIRING.

B. MOCP = MAXIMUM OVER CURRENT PROTECTION
MCA = MINIMUM CIRCUIT AMPACITY

C. PROVIDE DISCONNECTING MEANS FOR EACH ITEM OF EQUIPMENT LISTED IN THE SCHEDULE ABOVE, EXCEPT AS SPECIFICALLY NOTED OTHERWISE IN SCHEDULE NOTES, BELOW.

WIRE / CONDUIT SCHEDULE

302 2 #10 CU, 1 #10 CU GND., IN 3/4" C.

CLIENT

GENERAL SERVICES AGENCY GSA COUNTY OF ALAMEDA

ALAMEDA COUNTY

INTERFACE ENGINEERING
PROJECT 2025-1084
CONTACT Philip Nguyen
1999 Harrison Street, Suite 550
Oakland, CA 94612
TEL 415.489.7240
www.interfaceengineering.com

NOTE: If this drawing is not 22"x34" it has been revised from its original size and the scales noted on drawing/details are no longer applicable.

© 2022 Shah Kawasaki Architects

Revision Number	DATE	ISSUE DESCRIPTION
	09/03/2026	PERMIT SET

Project

WHITECOTTON COTTAGE REHABILITATION
15400 FOOTHILL BLVD
SAN LEANDRO, CA 94578

Architect of Record

P&T

Consultant

PAGE & TURNBULL
170 MAIDEN LANE, 5TH FLOOR
SAN FRANCISCO, CA

REGISTERED PROFESSIONAL ENGINEER JASON LAU No. E16806 Exp: 09/30/26 ELECTRICAL STATE OF CALIFORNIA

Drawing Title
PARTIAL SINGLE LINE DIAGRAM- ELECTRICAL

Drawing No.
E4.01

SKA Project Number: 25001

INVERTER: 2INV

Location: CLOSET 210
Supply From: 2LA
Mounting:
Enclosure: NEMA 1

Service: 120 V, 1 PH, 2 WIRE

A.I.C. Rating: 0 A
Rating: 1.6KVA

CKT	Circuit Description	Trip	Poles	Load
1	EM LIGHTING - BASEMENT & ENTRY	20 A	1	87.6
2	EM LIGHTING - 1ST FLOOR	20 A	1	148.5
3	EM LIGHTING - 2ND FLOOR	20 A	1	167.5
4	SPARE BREAKER	20 A	1	0.0
5	SPARE BREAKER	20 A	1	0.0
6	SPARE BREAKER	20 A	1	0.0
7	SPARE BREAKER	20 A	1	0.0
8	SPARE BREAKER	20 A	1	0.0
			Total Load:	403.6
			Total Amps:	3 A

Notes:

PANELBOARD: 1LA

MAIN CIRCUIT BREAKER 400 A
BUS AMPACITY: 400 A
EQUIPMENT RATING: 120/208 V, 3PH, 4 WIRE
AIC RATING: SEE ONE-LINE DIAGRAM

MOUNTING: SURFACE
ENCLOSURE: TYPE 1
LOCATION: IT CLOSET
SUPPLIED FROM:

Accessories:

CKT	Description/Location	Type	C.B.	Pole	Note	Load (VA) A	B	C	A	B	C	Note	Pole	C.B.	Type	Description/Location	CKT
1	REC - CONF 108 & 109	R	20 A	1		1,080			1,080				1	20 A	R	REC - TRAINING ROOM 107	2
3	REC - CONF 108 & 109	R	20 A	1			1,080			1,080			1	20 A	R	REC - TRAINING ROOM 107	4
5	REC - TRAINING ROOM 107	R	20 A	1				1,080			900		1	20 A	R	REC - RECEPTION 101	6
7	REC - OPEN OFFICE 102	R	20 A	1		1,080			266				2	20 A	Motor	FCU-1-01/02/03/04, FCU-0-01	8
9	REC - CONF ROOM 103	R	20 A	1			900			266		--	--	--	--	--	10
11	REC - CLOSET, RESTROOM, CP-1	R	20 A	1				720			100		2	20 A	Motor	FCU-1-05/06/07/08	12
13	CU-1	Motor	100 A	3		7,205			100			--	--	--	--	--	14
15	--	--	--	--	--		7,205			832			2	20 A	Motor	CU-2	16
17	--	--	--	--	--			7,205			832	--	--	--	--	--	18
19	EF-1-1/2, FSDs	Motor	20 A	1		280			1,800				3	30 A	Motor	ELEV DISCONNECT	20
21	BC-1	Motor	20 A	2			14			1,800		--	--	--	--	--	22
23	--	--	--	--	--			14			1,800	--	--	--	--	--	24
25	DOOR BUCK CABINET	R	20 A	1		1,800			2,080				2	30 A	WH	IWH-1	26
27	REC - BASEMENT	R	20 A	1			540			2,080		--	--	--	--	--	28
29	ERV-1	Motor	20 A	2				1,248			566		1	20 A	L	LIGHTING - SITE	30
31	--	--	--	--	--	1,248			676				1	20 A	L	LIGHTING - BASEMENT & 1ST FLR	32
33	SECURITY PANEL - IT CLOSET 104	G	20 A	1			1,000			500			1	20 A	G	IRRIGATION CONTROLLER - SITE	34
35	RACK - IT CLOSET 104	R	20 A	1				1,920			2,500		2	100 A	WH	HPWH-1	36
37	REC - EXTERIOR EAST	R	20 A	1		180			2,500			--	--	--	--	--	38
39	SPARE BREAKER	--	20 A	1			0			720			1	20 A	R	REC - OFFICES LEVEL 1	40
41	SPARE BREAKER	--	20 A	1				0			0		1	20 A	--	SPARE BREAKER	42
43	SPARE BREAKER	--	20 A	1		0			0				1	20 A	--	SPARE BREAKER	44
45	BUSSED SPACE	--	--	1			--			0			1	20 A	--	SPARE BREAKER	46
47	BUSSED SPACE	--	--	1				--			0		1	20 A	--	SPARE BREAKER	48
49	PANEL '2LA'	Moto...	100 A	3		9,634			0				1	20 A	--	SPARE BREAKER	50
51	--	--	--	--	--		12,261			--			1	--	--	BUSSED SPACE	52
53	--	--	--	--	--			7,564			--		1	--	--	BUSSED SPACE	54

Total Connected load Ph. A	263 A	Panel Connected Load: 87.7 kVA	243.5 A
Total Connected load Ph. B	257 A	Total Demand Load: 89.8 kVA	249.4 A
Total Connected load Ph. C	220 A		

Notes:

PANELBOARD: 2LA

MAIN LUG ONLY
BUS AMPACITY: 150 A
EQUIPMENT RATING: 120/208 V, 3PH, 4 WIRE
AIC RATING: SEE ONE-LINE DIAGRAM

MOUNTING: SURFACE
ENCLOSURE: TYPE 1
LOCATION:
SUPPLIED FROM: 1LA

Accessories:

CKT	Description/Location	Type	C.B.	Pole	Note	Load (VA) A	B	C	A	B	C	Note	Pole	C.B.	Type	Description/Location	CKT
1	REC - OFFICE 208	R	20 A	1		1,080			1,440				1	20 A	R	REC - MEETING ROOM 202	2
3	REC - OFFICE 207	R	20 A	1			900			1,080			1	20 A	R	REC - OFFICE 203	4
5	REC - OFFICE 207	R	20 A	1				1,080			1,440		1	20 A	R	REC - BREAK ROOM	6
7	REC - BREAK ROOM	R	20 A	1		500			360				1	20 A	R	REC - BREAK ROOM	8
9	REC - BREAK ROOM	R	20 A	1			500			75			2	20 A	Motor	FCU-2-05/06/07	10
11	REC - BREAK ROOM	R	20 A	1				500			75	--	--	--	--	--	12
13	REC - CLOSET/BREAK ROOM	R	20 A	1		360			44				1	20 A	Motor	EF-2-1/2	14
15	REC - STAIR HALL/RESTROOM	R	20 A	1			540			14			2	20 A	Motor	BC-2	16
17	FCU-2-01/02/03/04	Motor	20 A	2				100			14	--	--	--	--	--	18
19	--	--	--	--	--	100			550				1	20 A	L	LIGHTING - LEVEL 2/ATTIC	20
21	ERV-2	Motor	20 A	2			832			3,120			2	40 A	C	EVCS	22
23	--	--	--	--	--			832			3,120	--	--	--	--	--	24
25	IWH-2	WH	20 A	2		2,080			3,120				2	40 A	C	EVCS	26
27	--	--	--	--	--		2,080			3,120		--	--	--	--	--	28
29	SPARE BREAKER	--	20 A	1				0			0		1	20 A	--	SPARE BREAKER	30
31	SPARE BREAKER	--	20 A	1		0			0				1	20 A	--	SPARE BREAKER	32
33	SPARE BREAKER	--	20 A	1			0			0			1	20 A	--	SPARE BREAKER	34
35	BUSSED SPACE	--	--	1				--			--		1	--	--	BUSSED SPACE	36
37	BUSSED SPACE	--	--	1		--			--				1	--	--	BUSSED SPACE	38
39	BUSSED SPACE	--	--	1			--			--			1	--	--	BUSSED SPACE	40
41	BUSSED SPACE	--	--	1				--			404		1	20 A	Spar...	INVERTER '2INV'	42

Total Connected load Ph. A	83 A	Panel Connected Load: 29.5 kVA	81.8 A
Total Connected load Ph. B	105 A	Total Demand Load: 33.9 kVA	94.0 A
Total Connected load Ph. C	63 A		

Notes:
1. PROVIDE GFCI TYPE BREAKER.

CLIENT

GENERAL SERVICES AGENCY COUNTY OF ALAMEDA GSA

ALAMEDA COUNTY

INTERFACE ENGINEERING
PROJECT 2025-1084
CONTACT Philip Nguyen
1999 Harrison Street, Suite 550
Oakland, CA 94612
TEL 415.489.7240
www.interfaceengineering.com

NOTE: If this drawing is not 22"x34" it has been revised from its original size and the scales noted on drawing/details are no longer applicable.

© 2022 Shah Kawasaki Architects

Revision Number	DATE	ISSUE DESCRIPTION
	09/03/2026	PERMIT SET

Project

WHITECOTTON COTTAGE REHABILITATION
15400 FOOTHILL BLVD
SAN LEANDRO, CA 94578

Architect of Record

P&T

Consultant

PAGE & TURNBULL
170 MAIDEN LANE, 5TH FLOOR
SAN FRANCISCO, CA

REGISTERED PROFESSIONAL ENGINEER
JASON LAU
No. E16806
Exp: 09/30/26
ELECTRICAL
STATE OF CALIFORNIA

Drawing Title
PANEL SCHEDULES - ELECTRICAL

Drawing No.
E5.01

SKA Project Number: 25001

Wall Opening Protective Materials (CLIV)
CP617/CP617L
CLIV.R13240

WALL OPENING PROTECTIVE MATERIALS
ANSI/UL 263 1 OR 2 HOUR RATING

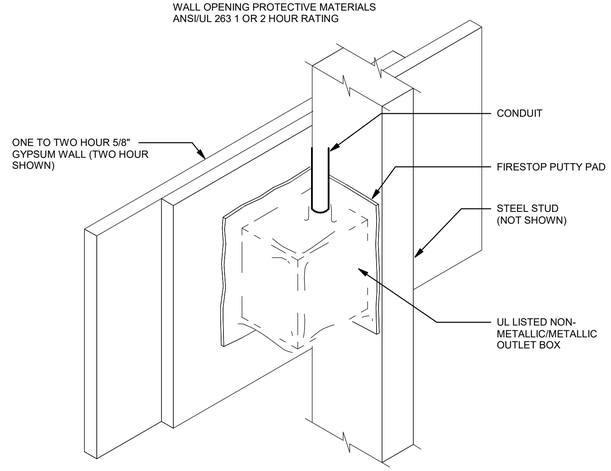

1 FIRE STOP PUTTY PAD DETAIL

NO SCALE

UL/cUL SYSTEM NO. W-L-1054

METAL PIPE THROUGH GYPSUM WALL ASSEMBLY
F-RATING = 1 AND 2-HOUR
T-RATING = 0-HOUR
L-RATING AT AMBIENT = LESS THAN 1CFM/SQFT
L-RATING AT 400 DEGREES FAHRENHEIT = 4 CFM/SQFT

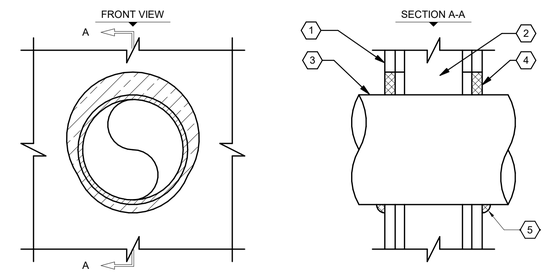

NOTES

A. MAXIMUM DIAMETER OF OPENING:
   A. 32-1/4" FOR STEEL STUD WALLS.
   B. 14-1/2" FOR WOOD STUD WALLS.

B. ANNULAR SPACE = MINIMUM 0", MAXIMUM 2-1/4".

C. PIPE MAY BE INSTALLED WITH CONTINUOUS POINT OF CONTACT.

D. PIPE MAY BE INSTALLED AT AN ANGLE NOT GREATER THAN 45° FROM PERPENDICULAR.

DETAIL KEYNOTES

1. GYPSUM WALL ASSEMBLY (UL/ULC CLASSIFIED U300 OR U400 SERIES) (1-HR.OR 2-HR. FIRE-RATING) (2-HR. SHOWN).

2. (NOT SHOWN). WOOD STUDS TO CONSIST OF NOMINAL 2" x 4" LUMBER. STEEL STUDS TO BE MINIMUM 2-1/2" WIDE.

3. PENETRATING ITEM TO BE ONE OF THE FOLLOWING :
   A. MAXIMUM 30" DIAMETER STEEL PIPE (SCHEDULE 10 OR HEAVIER).
   B. MAXIMUM 30" DIAMETER CAST IRON PIPE.
   C. MAXIMUM 6" NOMINAL DIAMETER COPPER PIPE.
   D. MAXIMUM 6" NOMINAL DIAMETER STEEL CONDUIT.
   E. MAXIMUM 4" NOMINAL DIAMETER EMT.

4. MINIMUM 5/8" DEPTH HILTI FS-ONE INTUMESCENT FIRESTOP SEALANT.

5. MINIMUM 1/2" BEAD HILTI FS-ONE INTUMESCENT FIRESTOP SEALANT AT POINT OF CONTACT.

2 CONDUIT THROUGH WALL FIRESTOP ASSEMBLY DETAIL

NO SCALE

CLIENT

GENERAL SERVICES AGENCY GSA COUNTY OF ALAMEDA

ALAMEDA COUNTY

INTERFACE ENGINEERING
PROJECT 2025-1084
CONTACT Philip Nguyen
1999 Harrison Street, Suite 550
Oakland, CA 94612
TEL 415.489.7240
www.interfaceengineering.com

NOTE: If this drawing is not 22"x34" it has been revised from its original size and the scales noted on drawing/details are no longer applicable.

© 2022 Shah Kawasaki Architects

Revision Number	DATE	ISSUE DESCRIPTION
	09/03/2026	PERMIT SET

Project

WHITECOTTON COTTAGE REHABILITATION

15400 FOOTHILL BLVD
SAN LEANDRO, CA 94578

Architect of Record

P&T

Consultant

PAGE & TURNBULL
170 MAIDEN LANE, 5TH FLOOR
SAN FRANCISCO, CA

REGISTERED PROFESSIONAL ENGINEER
JASON LAU
No. E16806
Exp: 09/30/26
ELECTRICAL
STATE OF CALIFORNIA

Drawing Title

DETAILS - ELECTRICAL

Drawing No.

E5.02

SKA Project Number: 25001

PLUMBING SYMBOL LIST

NOTE: This is a standard symbol list and not all items listed may be used.

Abbreviations

(A)	ABANDON IN PLACE
AFF	ABOVE FINISHED FLOOR
AP	ACCESS PANEL
&	AND
A	AQUASTAT, ARCHITECT, ANCHOR, AMPHERE
@	AT
BFP	BACKFLOW PREVENTER
BFF	BELOW FINISHED FLOOR
BTUH	BRITISH THERMAL UNITS PER HOUR
BLDG	BUILDING
CV	CHECK VALVE
CO	CLEANOUT
CW	COLD WATER
CD	CONDENSATE DRAIN
CONT.	CONTINUATION
CFH	CUBIC FEET PER HOUR
CFS	CUBIC FEET PER SECOND
(X)	DEMOLISH
DW	DISHWASHER, DOMESTIC WATER
DET	DOMESTIC EXPANSION TANK
DCVA	DOUBLE CHECK VALVE ASSEMBLY
DN	DOWN
DS	DOWNSPOUT
DSN	DOWNSPOUT NOZZLE
D	DRAIN
DFU	DRAINAGE FIXTURE UNIT
DWV	DRAINAGE, WASTE AND VENT
DF	DRINKING FOUNTAIN
EWC	ELECTRIC WATER COOLER
EWH	ELECTRIC WATER HEATER
(E)	EXISTING
FT	FEET
FFE	FINISHED FLOOR ELEVATION
F	FIRE, FAHRENHEIT
FL	FLOOR
FCO	FLOOR CLEANOUT
FD	FLOOR DRAIN
FV	FLUSH VALVE
'	FOOT, FEET
(F)	FUTURE
GPM	GALLONS PER MINUTE
GWH	GAS WATER HEATER
HVAC	HEATING, VENTILATING AND AIR CONDITIONING
HZ	HERTZ
HB	HOSE BIBB
HW	HOT WATER
HWFU	HOT WATER FIXTURE UNIT
HWR	HOT WATER RETURN
IN, "	INCHES
IW	INDIRECT WASTE
INV	INVERT ELEVATION
L	LAVATORY
MIN	MINIMUM
MX	MIXING VALVE
MS	MOP SINK
(N)	NEW
N	NORTH
NIC	NOT IN CONTRACT
NTS	NOT TO SCALE
#	NUMBER
NO.	NUMBER
OD	OVERFLOW DRAIN, OUTSIDE DIAMETER
OFCI	OWNER FURNISHED, CONTRACTOR INSTALLED
OFOI	OWNER FURNISHED, OWNER INSTALLED
PLBG	PLUMBING
P	PLUMBING, PUMP
POC	POINT OF CONNECTION
PSI	POUNDS PER SQUARE INCH
PD	PRESSURE DROP, PLUMBING DEMOLITION, PUMPED DISCHARGE
PRV	PRESSURE REDUCING VALVE
QTY	QUANTITY
RWL	RAINWATER LEADER
RPBP	REDUCED PRESSURE BACKFLOW PREVENTER
(R)	RELOCATE / RELOCATED LOCATION
RD	ROOF DRAIN
SAN	SANITARY
SB	SERVICE BOX
SHT	SHEET
SA	SHOCK ARRESTOR
SOV	SHUT OFF VALVE
S, SK	SINK
SF	SQUARE FEET
SD	STORM DRAIN
SP	SUMP PUMP, STATIC PRESSURE
TEMP	TEMPERATURE
TP	TRAP PRIMER, TOTAL PRESSURE
TYP	TYPICAL
U, UR	URINAL
V	VACUUM, VENT, VOLT
VTR	VENT THRU ROOF
WCO	WALL CLEANOUT
W	WASTE
WC	WATER COLUMN, WATER CLOSET
WHA	WATER HAMMER ARRESTOR
WH	WATER HEATER, WALL HYDRANT
WSFU	WATER SUPPLY FIXTURE UNIT
W/	WITH

General

- KEYED NOTE
- DEMOLISH
- EXISTING WORK
- NEW WORK
- PIPE OR CONDUIT BELOW GRADE
- CONTINUATION
- EXTENT OF DEMOLITION
- POINT OF CONNECTION
- FIXTURE TAG (LEVEL BELOW FIXTURE)
- XXX-X — HVAC EQUIPMENT IDENTIFICATION (REF. ONLY)
- XX-X — PLUMBING EQUIPMENT IDENTIFICATION

Piping Fittings

- AP — ACCESS PANEL
- AQUASTAT
- BLIND FLANGE
- CAP
- COTG — CLEANOUT TO GRADE
- CONCENTRIC REDUCER
- DSN — DOWNSPOUT NOZZLE
- ECCENTRIC REDUCER
- FCO — FLOOR CLEANOUT
- FD — FLOOR DRAIN
- FS — FLOOR SINK
- FLOW DIRECTION
- HOSE BIBB / WALL HYDRANT
- OD — OVERFLOW ROOF DRAIN
- PIPE DROP
- PIPE RISE
- PUMP
- RD — ROOF DRAIN
- SHOCK ABSORBER / WATER HAMMER ARRESTOR
- STRAINER
- T&P RELIEF VALVE WITH PIPE TO DRAIN
- TEE DOWN ON PIPE
- TEE UP ON PIPE
- VTR — VENT THROUGH ROOF
- WCO — WALL CLEANOUT

Piping Systems

- COLD WATER PIPING
- D — CONDENSATE / INDIRECT DRAIN PIPING
- HOT WATER PIPING
- HOT WATER RETURN PIPING
- 2#G — NATURAL GAS PIPING, 2 LB
- G — NATURAL GAS PIPING, 7" WC PRESSURE
- OD — OVERFLOW DRAIN PIPING ABOVE GRADE OR FINISHED FLOOR
- SANITARY VENT PIPING
- SANITARY WASTE OR SOIL PIPING ABOVE GRADE OR FINISHED FLOOR
- SANITARY WASTE OR SOIL PIPING BELOW GRADE OR FINISHED FLOOR
- SD — STORM DRAIN PIPING ABOVE GRADE OR FINISHED FLOOR
- SD — STORM DRAIN PIPING BELOW GRADE OR FINISHED FLOOR
- TP — TRAP PRIMER PIPING

Valves

- BFP — BACKFLOW PREVENTER
- CHECK VALVE
- SHUTOFF VALVE, GENERAL

GENERAL PLUMBING NOTES

A. ALL WORK UNDER THIS CONTRACT SHALL CONFORM TO THE CURRENT STATE, COUNTY AND NATIONAL CODES AND STANDARDS ADOPTED BY THE LOCAL JURISDICTIONS INCLUDING APPLICABLE AMENDMENTS.

B. CONDITIONS SHOWN ON THE PLANS RELATIVE TO THE WORK TO BE PERFORMED ARE BASED ON THE BEST INFORMATION AVAILABLE AND SUBJECT TO VERIFICATION. VERIFY LOCATIONS AND ELEVATIONS OF UTILITIES TO BE CROSSED OR CONNECTED. CORRECT DEFICIENCIES CAUSED BY FAILURE TO PERFORM SUCH VERIFICATIONS AT NO EXPENSE TO OWNER. IMMEDIATELY NOTIFY ARCHITECT AND ENGINEER OF CONDITION IN CONFLICT WITH THE DETAILS/PLANS.

C. COORDINATE INSTALLATION OF PIPING, FIXTURES, EQUIPMENT AND THE LIKE BELOW AND ABOVE GRADE WITH STRUCTURAL COMPONENTS AND OTHER SYSTEMS INSTALLATION.

D. COORDINATE FIXTURES, EQUIPMENT, PIPE ROUGH-IN/CONNECTION LOCATIONS AND DRAIN LOCATIONS WITH ARCHITECTURAL DRAWINGS.

E. VALVES FOR SERVICE ACCESSIBILITY. VALVES INSTALLED ABOVE CEILING SHALL BE WITHIN 18" OF CEILING.

F. ALL WASTE PIPE TO SLOPE MINIMUM OF 1/4" PER FOOT.

G. PROVIDE WATER HAMMER ARRESTERS TO DOMESTIC WATER LINES SERVING QUICK ACTING VALVES SUCH AS THE FOLLOWING:
1. FLUSH VALVES.
2. SOLENOID VALVES TO ICEMAKERS AND DISHWASHER.
3. SENSOR FAUCETS.
4. SINGLE HANDLE FAUCETS.
5. SINGLE HANDLE SHOWER VALVES.
6. SINGLE HANDLE TUB.SHOWER VALVES.

H. EXCEPT FOR SHOWER DRAINS, ALL FLOOR DRAINS, FLOOR SINKS, AND OTHER INDIRECT WASTE RECEPTORS DIRECTLY CONNECTED TO THE DRAINAGE SYSTEM SHALL BE PROVIDED WITH AN AUTOMATIC TRAP PRIMER.

I. PERMANENT VACUUM BREAKERS SHALL BE INCLUDED IN ALL HOSE BIBS.

J. INSTALLATION OF THE DOMESTIC HOT WATER SYSTEM SHALL COMPLY WITH THE MANDATORY REQUIREMENTS OF SECTION 1103.3 OF THE CALIFORNIA BUILDING ENERGY EFFICIENCY STANDARDS.

K. DRAINAGE PIPING SERVING FIXTURES THAT ARE LOCATED BELOW THE ELEVATION OF THE NEXT UPSTREAM MANHOLE SHALL BE PROVIDED WITH A BACKWATER VALVE. FIXTURES ABOVE THAT LEVEL SHALL NOT DISCHARGE THROUGH THIS VALVE.

L. SEWER VENTS SHALL TERMINATE AT LEAST 10 FEET HORIZONTALLY **(25 FEET FOR OSHPD PROJECTS)** FROM AND AT LEAST 3 FEET ABOVE OPERABLE WINDOW, DOOR OPENING, AIR INTAKE OR VENT SHAFT. VENT MUST BE AT LEAST 3 FEET FROM PROPERTY LINE.

M. PRIOR TO BEING CONCEALED, PIPING PENETRATIONS AT THE FIRE RESISTIVE ASSEMBLIES SHALL BE INSPECTED TO VERIFY COMPLIANCE WITH THE FIRE RESISTANCE RATING.

N. INDIRECT WASTE SHALL DISCHARGE TO THE BUILDING DRAINAGE THROUGH AN APPROVED AIR GAP OR AIR BREAK WITH A MINIMUM 1" DISTANCE FROM THE LOWEST POINT OF INDIRECT PIPE TO THE FLOOD LEVEL RIM OF THE RECEPTOR.

SHEET INDEX

P0.01 SYMBOL LIST AND GENERAL NOTES - PLUMBING
P0.02 SCHEDULES - PLUMBING

P2.00 BASEMENT DEMOLITION PLAN - PLUMBING
P2.01 LEVEL 1 DEMOLITION PLAN - PLUMBING
P2.02 LEVEL 2 DEMOLITION PLAN - PLUMBING

P3.00 BASEMENT PLAN - PLUMBING
P3.01 LEVEL 1 PLAN - PLUMBING
P3.02 LEVEL 2 PLAN - PLUMBING
P3.03 ROOF PLAN - PLUMBING

P6.01 DETAILS - PLUMBING

CLIENT

GENERAL SERVICES AGENCY COUNTY OF ALAMEDA GSA

ALAMEDA COUNTY

INTERFACE ENGINEERING
PROJECT 2025-1084
CONTACT George Edpalina
1999 Harrison Street, Suite 550
Oakland, CA 94612
TEL 415.489.7240
www.interfaceengineering.com

NOTE: If this drawing is not 22"x34" it has been revised from its original size and the scales noted on drawing/details are no longer applicable.

© 2022 Shah Kawasaki Architects

Revision Number	DATE	ISSUE DESCRIPTION
	09/03/2026	PERMIT SET

Project

WHITECOTTON COTTAGE REHABILITATION

15400 FOOTHILL BLVD
SAN LEANDRO, CA 94578

Architect of Record

P&T

Consultant

PAGE & TURNBULL
170 MAIDEN LANE, 5TH FLOOR
SAN FRANCISCO, CA

REGISTERED PROFESSIONAL ENGINEER
GEORGE ARNAIZ EDPALINA
No. M38226
Exp: 03/31/27
MECHANICAL
STATE OF CALIFORNIA

Drawing Title

SYMBOL LIST AND GENERAL NOTES - PLUMBING

Drawing No.

P0.01

SKA Project Number: 25001

ELECTRIC WATER HEATER SCHEDULE - TANK TYPE

SYMBOL	EQUIPMENT TYPE	LOCATION / SERVING	BASIS OF DESIGN MFR	BASIS OF DESIGN MODEL	TANK CAPACITY (GALLONS)	RECOVERY RATE @ 100F RISE (GPH)	ELECTRICAL VOLTS	ELECTRICAL PH	ELECTRICAL KW	ELECTRICAL ELEMENTS	MAX WT (LBS)	COMMENTS
EWH-1	ELECTRIC WATER HEATER	JANITOR CLOSET	AO SMITH	DEL-50	51	23	208	1	5	2	172	
CP-1	CIRCULATING PUMP	JANITOR CLOSET	BELL & GOSSETT	NBF-12F/LW	-	-	115	1	0.055	-	-	0.5 GPM @ 4FT OF HEAD; PROVIDE TIMER AND AQUASTAT
DET-1	EXPANSION TANK	JANITOR CLOSET	AMTROL	ST-5C-DD	2	-	-	-	-	-	10	
TMV-1	THERMOSTATIC MIXING VALVE	JANITOR CLOSET	LEONARD	TM-26-BDT-LF	-	-	-	-	-	-	-	1 GPM MIN FLOW CAPACITY; BALL VALVE WITH DIAL THERMOMETER

NOTES:

INSTANTANEOUS WATER HEATER SCHEDULE - TANKLESS

SYMBOL	EQUIPMENT TYPE	LOCATION / SERVING	BASIS OF DESIGN MFR	BASIS OF DESIGN MODEL	CAPACITY FLOW RATE (GPM)	CAPACITY TEMPERATURE RISE (DEG F)	ELECTRICAL VOLTS	ELECTRICAL PH	ELECTRICAL WATTS	ELECTRICAL AMPS	COMMENTS
IWH-1	TANKLESS - POINT OF USE	106 - RESTROOM	CHRONOMITE	CMI-20L/208	0.5	57	208	1	4160	20	
IWH-2	TANKLESS - POINT OF USE	206 - RESTROOM	CHRONOMITE	CMI-20L/208	0.5	57	208	1	4160	20	

NOTES:

PLUMBING FIXTURE SCHEDULE

SYMBOL	FIXTURE TYPE	DESCRIPTION	BASIS OF DESIGN MFR	BASIS OF DESIGN MODEL	ACCESSORIES	CONNECTION W	CONNECTION V	CONNECTION CW	CONNECTION HW	NOTES
DF-1	DRINKING FOUNTAIN	BOTTLE FILLING STATION WITH INTEGRAL SOFT SIDES FOUNTAIN FILTERED, NON-REFRIGERATED	ELKAY	LZWS-EDFP217K	PROVIDE WITH FILTER	2"	2"	1/2"	-	COORDINATE WITH DIV. 26 FOR POWER CONNECTION
FD-1	FLOOR DRAIN		J.R. SMITH	DX2568	PROVIDE TRAP GUARD IN LIEU TRAP PRIMER	3"	2"	-	-	-
HB-1	HOSE BIBB	BOX ANTI SIPHON VACUUM BREAKER	WOODFORD	B24	-	-	-	3/4"	-	-
SK-1	SINK (ADA)	COUNTER MOUNTED, STAINLESS STEEL, THREE HOLE, CENTER DRAIN; 5" DEEP	ELKAY	LRAD 252150	DELTA 100LF-WF FAUCET @ 1.8 GPM GARBAGE DISPOSER: INSINKERATOR MODEL EVOLUTION EXCEL (120V, 1.0 HP	2"	2"	3/4"	3/4"	-
L-1	LAVATORY (ADA)	WALL HUNG, VITREOUS CHINA, FRONT OVERFLOW WITH THREE HOLE FAUCET	KOHLER	K-2007	FAUCET: DELTA MODEL 520-DST; 0.5 GPM; WITH POP UP DRAIN AND LIFT ROD	2"	2"	1/2"	1/2"	PROVIDE CONCEALED FLOOR MOUNTED SUPPORT FOR THE LAVATORY
JS-1	MOP SINK	DROP FRONT MOP RECEPTOR	FLORESTONE	96	PROVIDE WITH MR-370 HOSE; MR-372 HANGER AND MR-375 HANGER. PROVIDE WITH SPEAKMAN FAUCET MODEL SC-5814	3"	2"	3/4"	3/4"	-
TP-1	TRAP PRIMER		MIFAB	MR-500		-	-	1/2"	-	-
U-1	URINAL (ADA)	0.125-1.0 GPF, WALL HUNG, WHITE VITREOUS CHINA	AMERICAN STANDARD			2"	2"	3/4"	-	
WC-1	WATER CLOSET (ADA)	FLOOR MOUNTED, ELONGATED TOILET	AMERICAN STANDARD	2854.128	WITH MANUAL FLUSH VALVE, 1.28 GPF; HEAVY DUTY SEAT MODEL #5901.100	4"	2"	1-1/4"	-	-

NOTES:

1 SEE ARCHITECTURAL DRAWINGS FOR ALL FIXTURE MOUNTING HEIGHTS AND LOCATIONS.

* UNLESS NOTED OTHERWISE ON DRAWINGS

SANITARY & WATER SERVICE CALCULATIONS

FIXTURE QUANTITY: PRIVATE INDIVID. DWELLING	FIXTURE QUANTITY: PUBLIC GENERAL USE	FIXTURE QUANTITY: PUBLIC HEAVY USE ASSEMBLY	DESCRIPTION	WATER FIXTURE UNITS: PRIVATE INDIVIDUAL DWELLING	WATER FIXTURE UNITS: PUBLIC GENERAL USE	WATER FIXTURE UNITS: PUBLIC HEAVY-USE ASSEMBLY	WATER FIXTURE UNITS: WATER TOTAL UNITS	WATER FIXTURE UNITS: (.75) HOT WATER	SANITARY FIXTURE UNITS: WASTE FIXTURE PRIVATE	SANITARY FIXTURE UNITS: WASTE FIXTURE PUBLIC	SANITARY FIXTURE UNITS: WASTE TOTAL UNITS
	1		DRINKING FOUNTAIN OR WATER COOLER	0.00	0.50	0.75	0.50	0.00	0.50	0.50	0.50
	1		HOSE BIBB	2.50	2.50	2.50	2.50	0.00	0.00	0.00	0.00
	2		HOSE BIBB, EACH ADDITIONAL	1.00	1.00	1.00	2.00	0.00	0.00	0.00	0.00
	1		KITCHEN SINK, DOMESTIC	1.50	1.50	2.00	1.50	1.13	2.00	2.00	2.00
	2		LAVATORY	1.00	1.00	1.00	2.00	1.50	2.00	2.00	4.00
	1		SERVICE SINK OR MOP BASIN (3" TRAP)	1.50	3.00	3.00	3.00	2.25	3.00	3.00	3.00
	2		URINAL, 0.5 GPF OR LESS	0.00	3.00	5.00	6.00	0.00	5.00	5.00	10.00
	2		WATER CLOSET, 1.6 GPF, FLUSHOMETER VALVE	5.00	5.00	8.00	10.00	0.00	3.00	4.00	8.00
	3		FLOOR DRAIN 3"				0.00	0.00	2.00	2.00	6.00
			TOTAL FIXTURE UNITS				27.50	4.88			33.50
			FLOW IN GPM				40.000	5.000	SEWER LATERAL SIZE		4"
			IRRIGATION FLOW				15.00	GPM			
			TOTAL GPM REQUIRED				55.000	GPM			
			WATER SERVICE SIZE TO BUILDING:				**3"**				

CLIENT

GENERAL SERVICES AGENCY COUNTY OF ALAMEDA GSA

ALAMEDA COUNTY

INTERFACE ENGINEERING

PROJECT 2025-1084
CONTACT George Edpalina

1999 Harrison Street, Suite 550
Oakland, CA 94612
TEL 415.489.7240
www.interfaceengineering.com

NOTE: If this drawing is not 22"x34" it has been revised from its original size and the scales noted on drawing/details are no longer applicable.

© 2022 Shah Kawasaki Architects

Revision Number	DATE	ISSUE DESCRIPTION
	09/03/2026	PERMIT SET

Project

WHITECOTTON COTTAGE REHABILITATION

15400 FOOTHILL BLVD
SAN LEANDRO, CA 94578

Architect of Record

P&T

Consultant

PAGE & TURNBULL
170 MAIDEN LANE, 5TH FLOOR
SAN FRANCISCO, CA

REGISTERED PROFESSIONAL ENGINEER GEORGE ARNAIZ EDPALINA No. M38226 Exp: 03/31/27 MECHANICAL STATE OF CALIFORNIA

Drawing Title

SCHEDULES - PLUMBING

Drawing No.

P0.02

SKA Project Number: 25001

SHEET KEYNOTES

1. REMOVE ALL PIPING IN THE CEILING SPACE, NO PIPING SHALL BE ABANDONED IN PLACE.

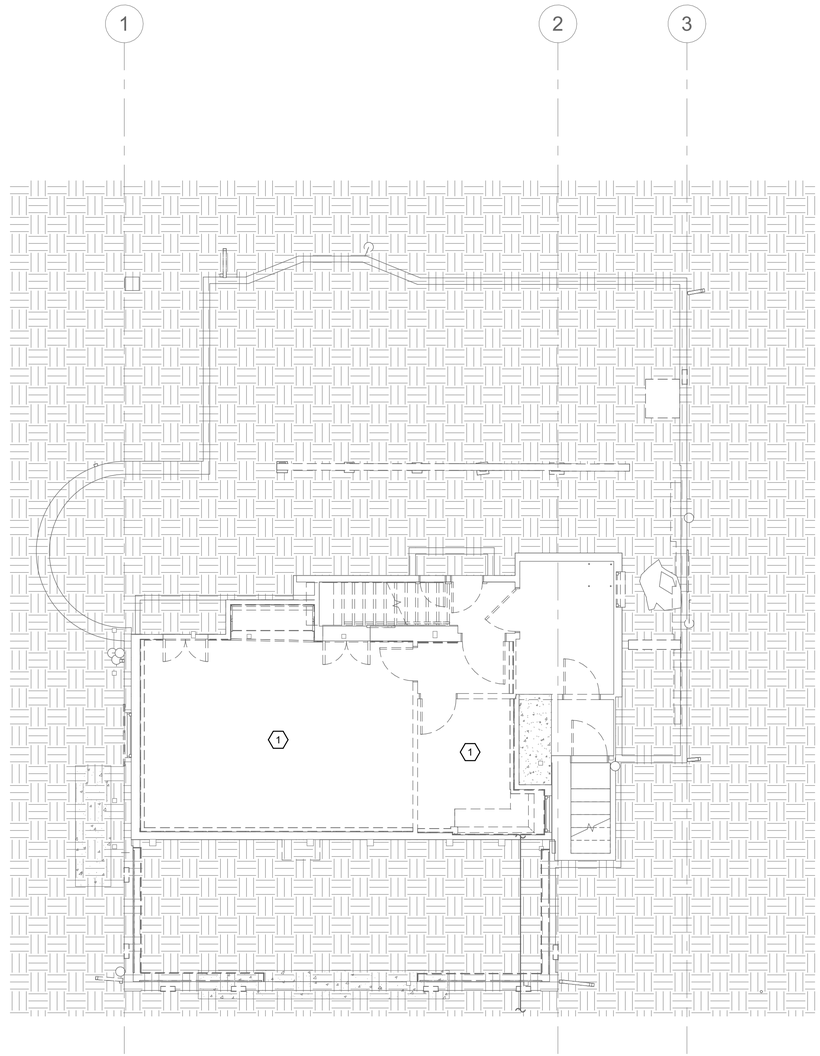

1 BASEMENT DEMOLITION PLAN - PLUMBING

0' 4' 8' 12'

3/16" = 1'-0"

CLIENT

GENERAL SERVICES AGENCY GSA COUNTY OF ALAMEDA

ALAMEDA COUNTY

INTERFACE ENGINEERING

PROJECT 2025-1084
CONTACT George Edpalina

1999 Harrison Street, Suite 550
Oakland, CA 94612
TEL 415.489.7240
www.interfaceengineering.com

NOTE: If this drawing is not 22"x34" it has been revised from its original size and the scales noted on drawing/details are no longer applicable.

© 2022 Shah Kawasaki Architects

Revision Number	DATE	ISSUE DESCRIPTION
	09/03/2026	PERMIT SET

Project

WHITECOTTON COTTAGE REHABILITATION

15400 FOOTHILL BLVD
SAN LEANDRO, CA 94578

Architect of Record

P&T

Consultant

PAGE & TURNBULL
170 MAIDEN LANE, 5TH FLOOR
SAN FRANCISCO, CA

REGISTERED PROFESSIONAL ENGINEER
GEORGE ARNAIZ EDPALINA
No. M38226
Exp: 03/31/27
MECHANICAL
STATE OF CALIFORNIA

Drawing Title

BASEMENT DEMOLITION PLAN - PLUMBING

Drawing No.

P2.00

SKA Project Number: 25001

SHEET KEYNOTES

1. REMOVE EXISTING PLUMBING FIXTURES AND ALL ASSOCIATED ACCESSORIES AND PIPING BELOW AND ABOVE CEILING.

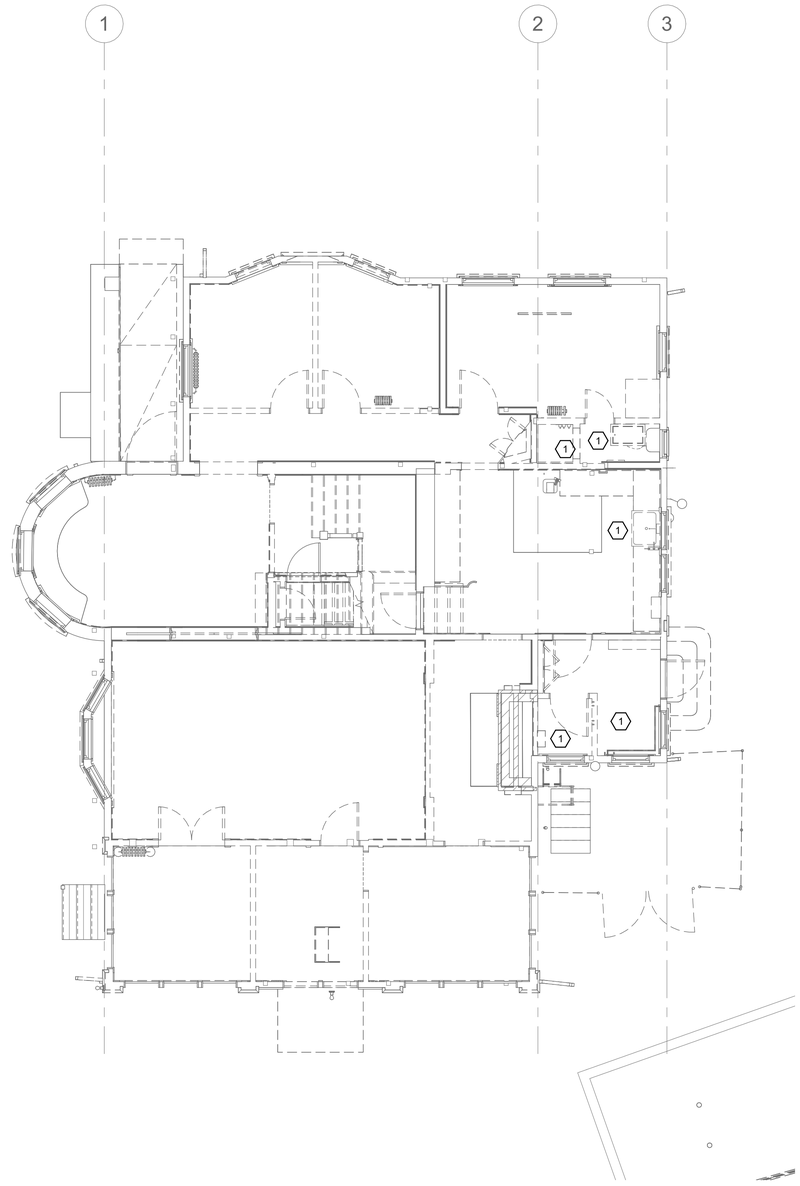

1 LEVEL 1 DEMOLITION PLAN - PLUMBING

0' 4' 8' 12'
3/16" = 1'-0"

CLIENT

GENERAL SERVICES AGENCY
GSA
COUNTY OF ALAMEDA

ALAMEDA COUNTY

INTERFACE ENGINEERING

PROJECT 2025-1084
CONTACT George Edpalina

1999 Harrison Street, Suite 550
Oakland, CA 94612
TEL 415.489.7240
www.interfaceengineering.com

NOTE: If this drawing is not 22"x34" it has been revised from its original size and the scales noted on drawing/details are no longer applicable.

© 2022 Shah Kawasaki Architects

Revision Number	DATE	ISSUE DESCRIPTION
	09/03/2026	PERMIT SET

Project

WHITECOTTON COTTAGE REHABILITATION

15400 FOOTHILL BLVD
SAN LEANDRO, CA 94578

Architect of Record

P&T

Consultant

PAGE & TURNBULL
170 MAIDEN LANE, 5TH FLOOR
SAN FRANCISCO, CA

REGISTERED PROFESSIONAL ENGINEER
GEORGE ARNAIZ EDPALINA
No. M38226
Exp: 03/31/27
MECHANICAL
STATE OF CALIFORNIA

Drawing Title

LEVEL 1 DEMOLITION PLAN - PLUMBING

Drawing No.

P2.01

SKA Project Number: 25001

SHEET KEYNOTES

1. REMOVE EXISTING PLUMBING FIXTURES AND ALL ASSOCIATED ACCESSORIES AND PIPING BELOW AND ABOVE CEILING.

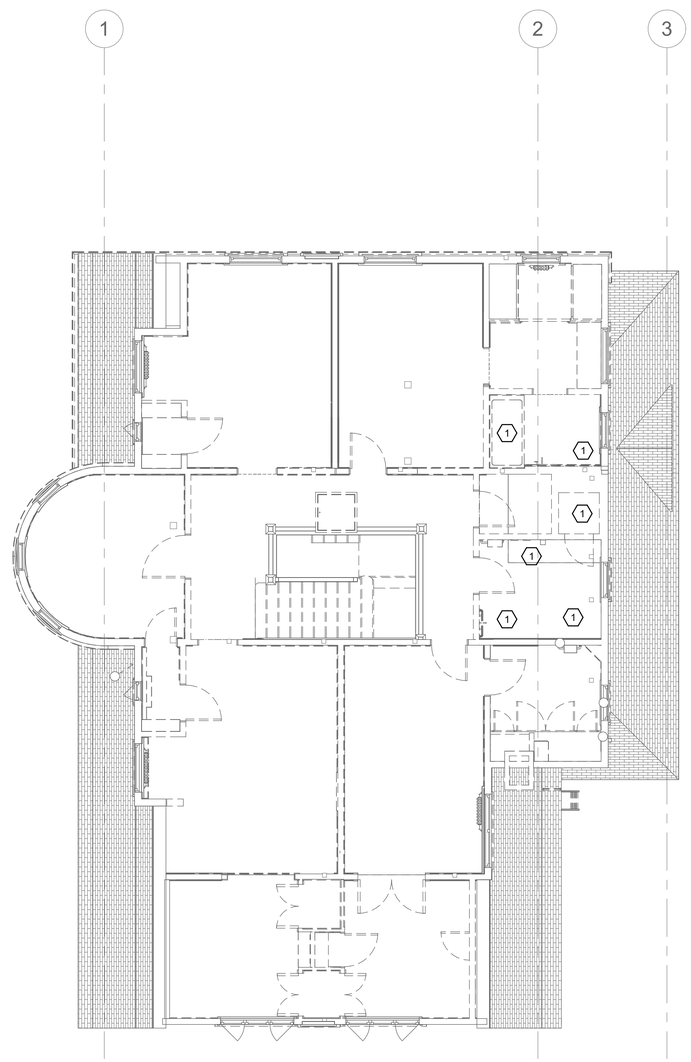

1 LEVEL 2 DEMOLITION PLAN - PLUMBING

0' 4' 8' 12'

3/16" = 1'-0"

CLIENT

GENERAL SERVICES AGENCY GSA COUNTY OF ALAMEDA

ALAMEDA COUNTY

INTERFACE ENGINEERING

PROJECT CONTACT 2025-1084 George Edpalina

1999 Harrison Street, Suite 550
Oakland, CA 94612
TEL 415.489.7240
www.interfaceengineering.com

NOTE: If this drawing is not 22"x34" it has been revised from its original size and the scales noted on drawing/details are no longer applicable.

© 2022 Shah Kawasaki Architects

Revision Number	DATE	ISSUE DESCRIPTION
	09/03/2026	PERMIT SET

Project

WHITECOTTON COTTAGE REHABILITATION

15400 FOOTHILL BLVD
SAN LEANDRO, CA 94578

Architect of Record

P&T

Consultant

PAGE & TURNBULL
170 MAIDEN LANE, 5TH FLOOR
SAN FRANCISCO, CA

REGISTERED PROFESSIONAL ENGINEER
GEORGE ARNAIZ EDPALINA
No. M38226
Exp: 03/31/27
MECHANICAL
STATE OF CALIFORNIA

Drawing Title

LEVEL 2 DEMOLITION PLAN - PLUMBING

Drawing No.

P2.02

SKA Project Number: 25001

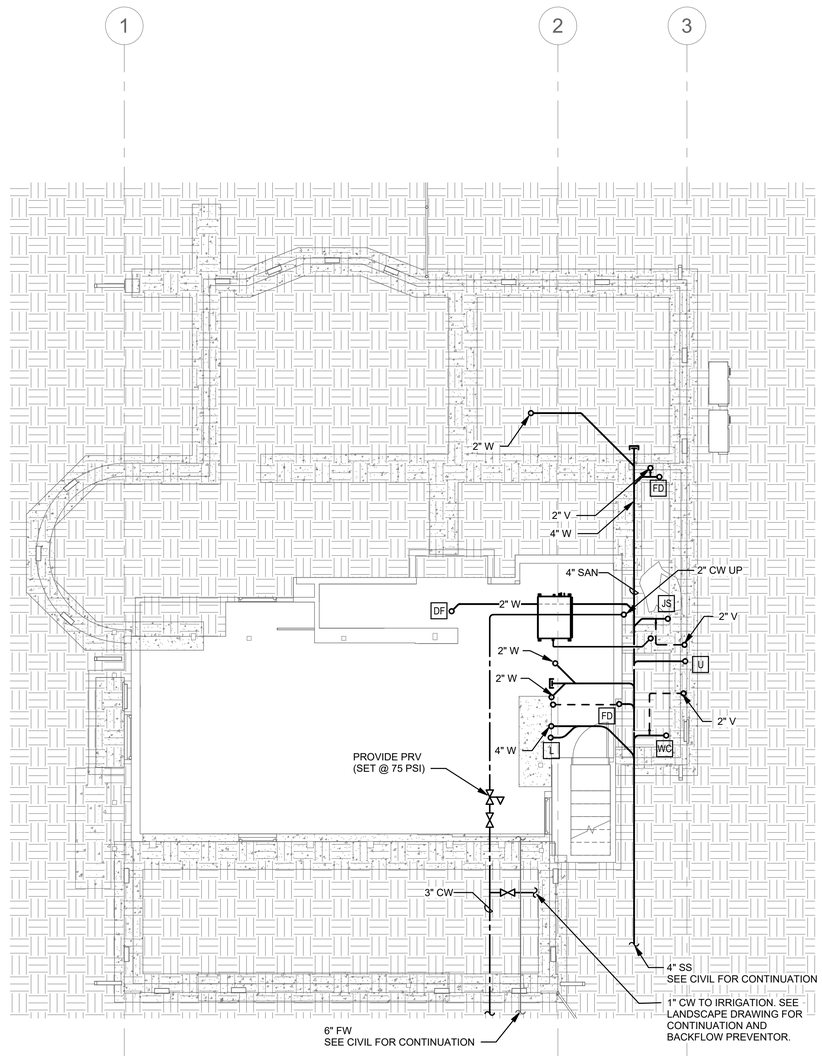

1 BASEMENT PLAN - PLUMBING

0' 4' 8' 12'

3/16" = 1'-0"

CLIENT

GENERAL SERVICES AGENCY
GSA
COUNTY OF ALAMEDA

ALAMEDA COUNTY

INTERFACE ENGINEERING

PROJECT 2025-1084
CONTACT George Edpalina

1999 Harrison Street, Suite 550
Oakland, CA 94612
TEL 415.489.7240
www.interfaceengineering.com

NOTE: If this drawing is not 22"x34" it has been revised from its original size and the scales noted on drawing/details are no longer applicable.

© 2022 Shah Kawasaki Architects

Revision Number	DATE	ISSUE DESCRIPTION
	09/03/2026	PERMIT SET

Project

WHITECOTTON COTTAGE REHABILITATION

15400 FOOTHILL BLVD
SAN LEANDRO, CA 94578

Architect of Record

P&T

Consultant

PAGE & TURNBULL
170 MAIDEN LANE, 5TH FLOOR
SAN FRANCISCO, CA

REGISTERED PROFESSIONAL ENGINEER
GEORGE ARNAIZ EDPALINA
No. M38226
Exp: 03/31/27
MECHANICAL
STATE OF CALIFORNIA

Drawing Title

BASEMENT PLAN - PLUMBING

Drawing No.

P3.00

SKA Project Number: 25001

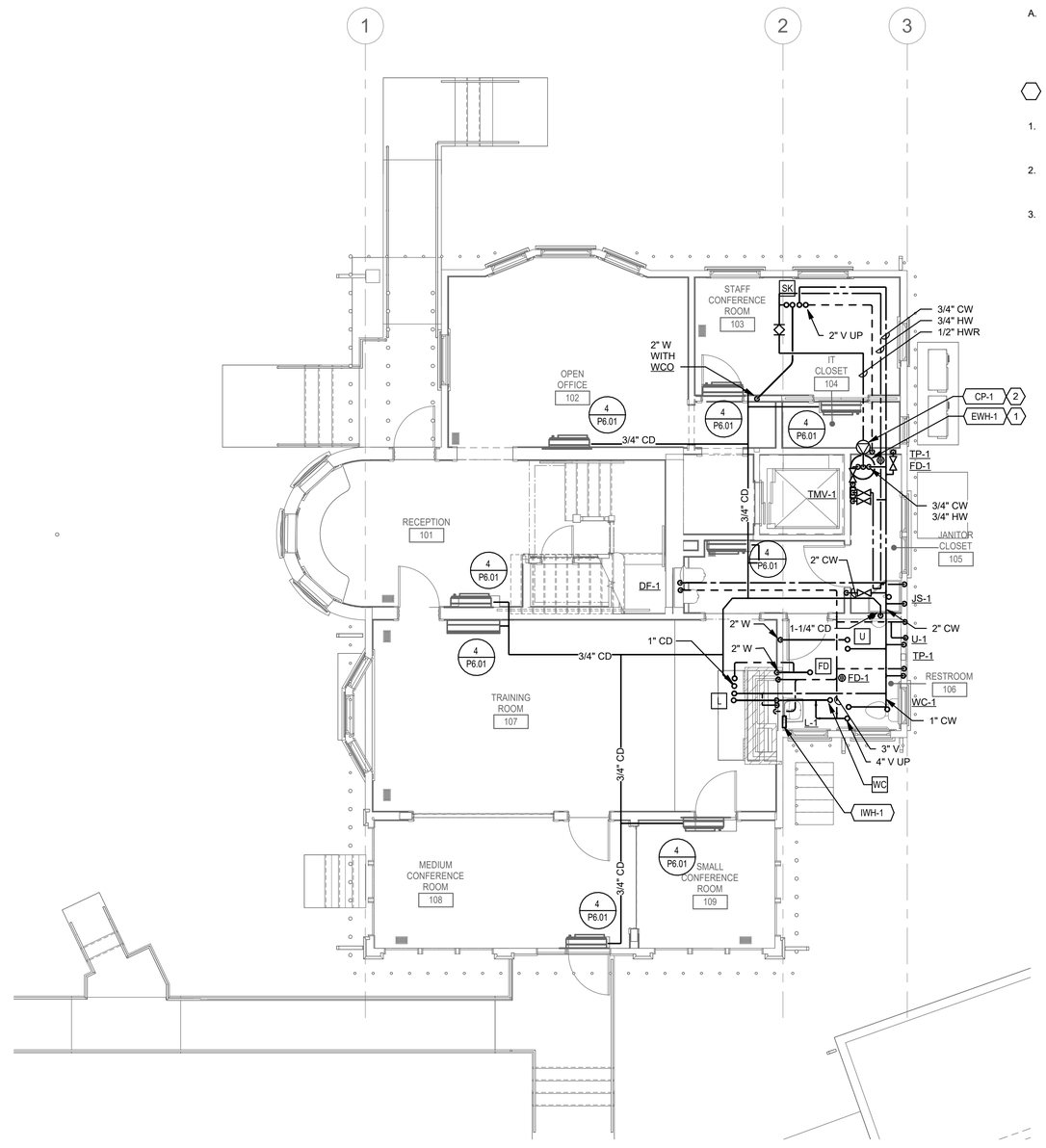

1 LEVEL 1 PLAN - PLUMBING

0' 4' 8' 12'
3/16" = 1'-0"

GENERAL NOTES

A. ALL CONDENSATE LINES SHALL BE INSULATED, PLEASE REFER TO SPECS 220700 FOR INSULATION TYPE AND THICKNESS.

SHEET KEYNOTES

1. LOCATE THE EWH BELOW THE SHELVING. PIPE ROUTING TO BE VERIFIED IN FIELD AND SHOULD NOT IMPEDE THE SHELVING INSTALLATION.
2. CP-1 SHOULD BE INSTALLED CLOSE TO THE WATER HEATER (UNDER THE SHELVING. SHOWN OUTSIDE DIAGRAMMATICALLY FOR CLARITY)
3. TERMINATE 1-1/4" CD TO JANITOR SINK WITH AIR GAP.

CLIENT

GENERAL SERVICES AGENCY GSA COUNTY OF ALAMEDA

ALAMEDA COUNTY

INTERFACE ENGINEERING
PROJECT 2025-1084
CONTACT George Edpalina
1999 Harrison Street, Suite 550
Oakland, CA 94612
TEL 415.489.7240
www.interfaceengineering.com

NOTE: If this drawing is not 22"x34" it has been revised from its original size and the scales noted on drawing/details are no longer applicable.

© 2022 Shah Kawasaki Architects

Revision Number	DATE	ISSUE DESCRIPTION
	09/03/2026	PERMIT SET

Project

WHITECOTTON COTTAGE REHABILITATION

15400 FOOTHILL BLVD
SAN LEANDRO, CA 94578

Architect of Record

P&T

Consultant

PAGE & TURNBULL
170 MAIDEN LANE, 5TH FLOOR
SAN FRANCISCO, CA

REGISTERED PROFESSIONAL ENGINEER
GEORGE ARNAIZ EDPALINA
No. M38226
Exp: 03/31/27
MECHANICAL
STATE OF CALIFORNIA

Drawing Title

LEVEL 1 PLAN - PLUMBING

Drawing No.

P3.01

SKA Project Number: 25001

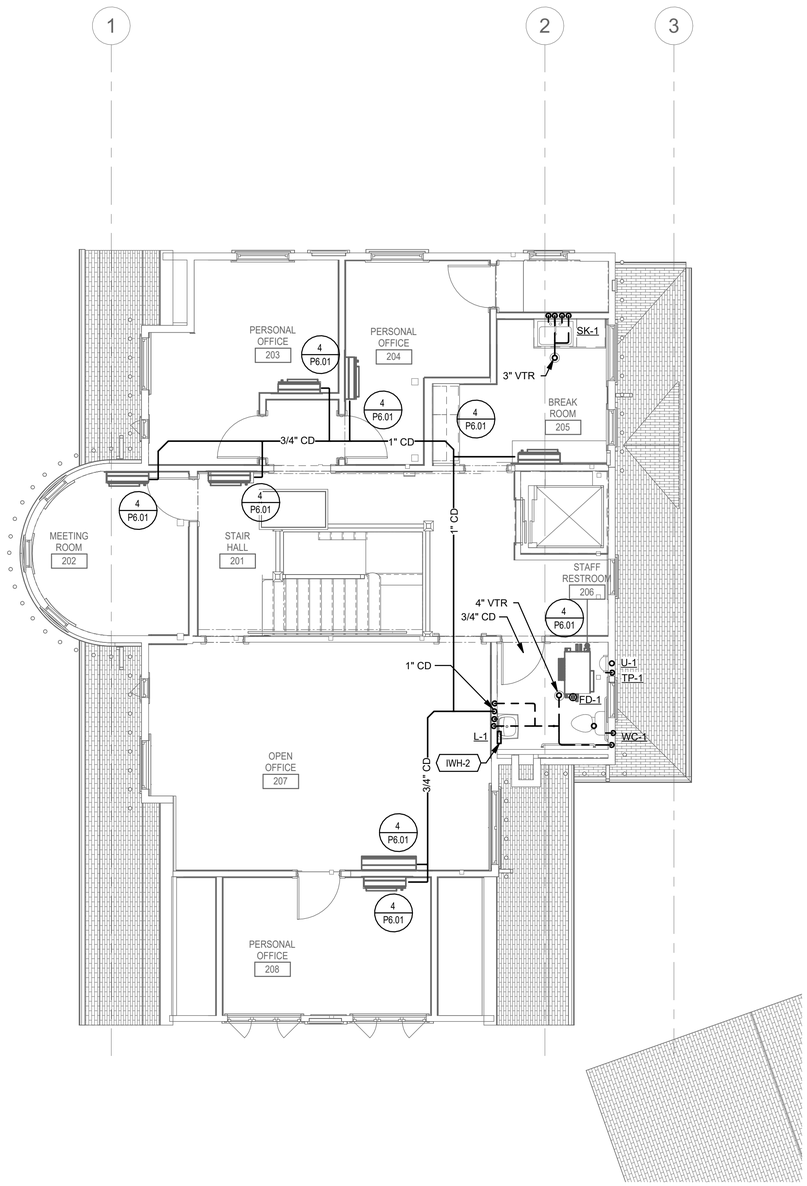

1 LEVEL 2 PLAN - PLUMBING

0' 4' 8' 12'

3/16" = 1'-0"

CLIENT

GENERAL SERVICES AGENCY COUNTY OF ALAMEDA GSA

ALAMEDA COUNTY

INTERFACE ENGINEERING

PROJECT 2025-1084
CONTACT George Edpalina

1999 Harrison Street, Suite 550
Oakland, CA 94612
TEL 415.489.7240
www.interfaceengineering.com

NOTE: If this drawing is not 22"x34" it has been revised from its original size and the scales noted on drawing/details are no longer applicable.

© 2022 Shah Kawasaki Architects

Revision Number	DATE	ISSUE DESCRIPTION
	09/03/2026	PERMIT SET

Project

WHITECOTTON COTTAGE REHABILITATION

15400 FOOTHILL BLVD
SAN LEANDRO, CA 94578

Architect of Record

P&T

Consultant

PAGE & TURNBULL
170 MAIDEN LANE, 5TH FLOOR
SAN FRANCISCO, CA

REGISTERED PROFESSIONAL ENGINEER
GEORGE ARNAIZ EDPALINA
No. M38226
Exp: 03/31/27
MECHANICAL
STATE OF CALIFORNIA

Drawing Title

LEVEL 2 PLAN - PLUMBING

Drawing No.

P3.02

SKA Project Number: 25001

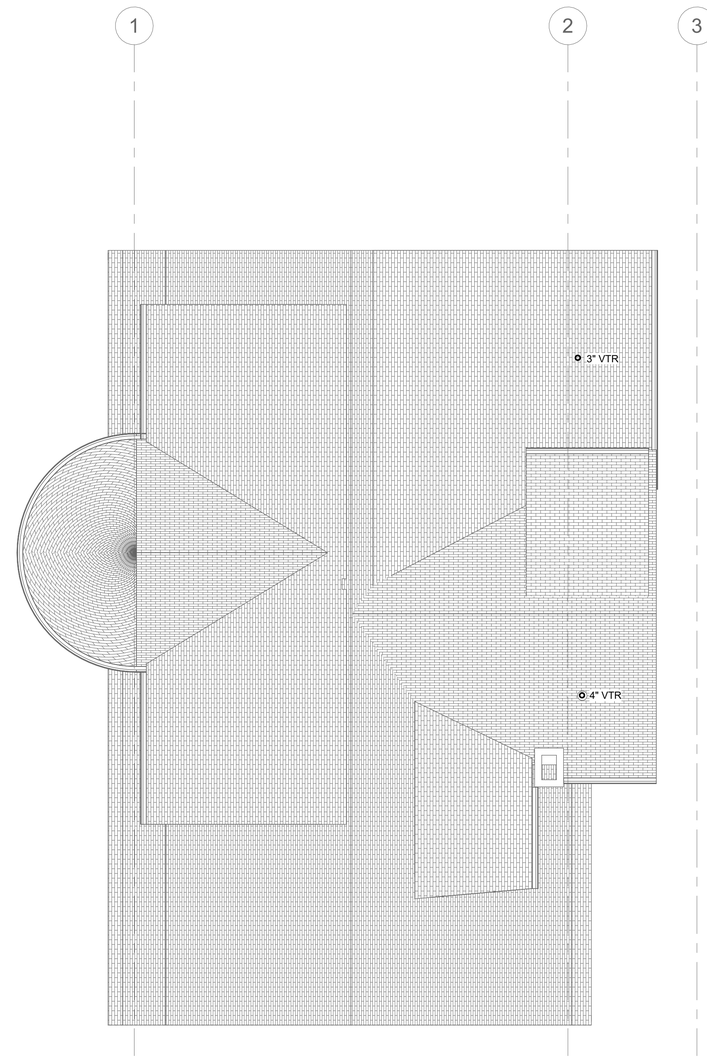

1 ROOF PLAN - PLUMBING

0' 4' 8' 12'
3/16" = 1'-0"

CLIENT

GENERAL SERVICES AGENCY
GSA
COUNTY OF ALAMEDA

ALAMEDA COUNTY

INTERFACE ENGINEERING

PROJECT 2025-1084
CONTACT George Edpalina

1999 Harrison Street, Suite 550
Oakland, CA 94612
TEL 415.489.7240
www.interfaceengineering.com

NOTE: If this drawing is not 22"x34" it has been revised from its original size and the scales noted on drawing/details are no longer applicable.

© 2022 Shah Kawasaki Architects

Revision Number	DATE	ISSUE DESCRIPTION
	09/03/2026	PERMIT SET

Project

WHITECOTTON COTTAGE REHABILITATION

15400 FOOTHILL BLVD
SAN LEANDRO, CA 94578

Architect of Record

P&T

Consultant

PAGE & TURNBULL
170 MAIDEN LANE, 5TH FLOOR
SAN FRANCISCO, CA

REGISTERED PROFESSIONAL ENGINEER
GEORGE ARNAIZ EDPALINA
No. M38226
Exp: 03/31/27
MECHANICAL
STATE OF CALIFORNIA

Drawing Title

ROOF PLAN - PLUMBING

Drawing No.

P3.03

SKA Project Number: 25001

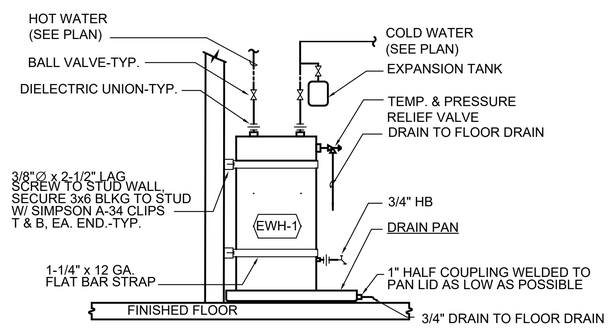

1 ELECTRIC / WATER HEATER

SCALE: NO SCALE

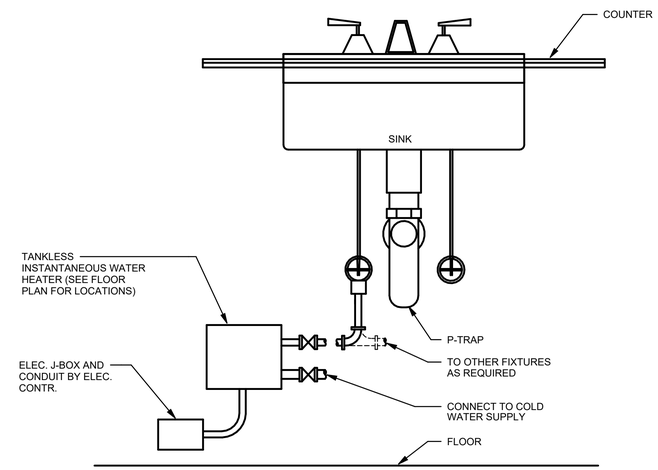

3 INSTANTANEOUS WATER HEATER

NO SCALE

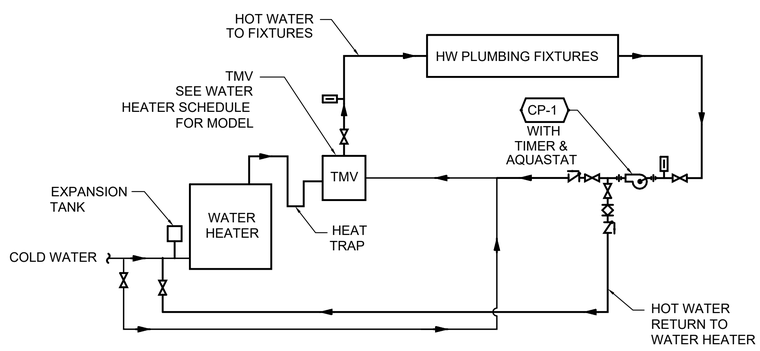

2 THERMOSTATIC MIXING VALVE DIAGRAM

NO SCALE

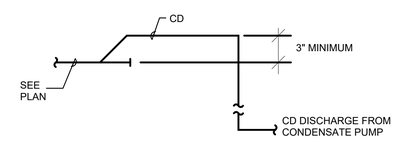

4 PUMPED CONDENSATE DRAIN CONNECTION

NO SCALE

CLIENT

GENERAL SERVICES AGENCY
GSA
COUNTY OF ALAMEDA

ALAMEDA COUNTY

INTERFACE ENGINEERING

PROJECT 2025-1084
CONTACT George Edpalina

1999 Harrison Street, Suite 550
Oakland, CA 94612
TEL 415.489.7240
www.interfaceengineering.com

NOTE: If this drawing is not 22"x34" it has been revised from its original size and the scales noted on drawing/details are no longer applicable.

© 2022 Shah Kawasaki Architects

Revision Number	DATE	ISSUE DESCRIPTION
	09/03/2026	PERMIT SET

Project

WHITECOTTON COTTAGE REHABILITATION

15400 FOOTHILL BLVD
SAN LEANDRO, CA 94578

Architect of Record

P&T

Consultant

PAGE & TURNBULL
170 MAIDEN LANE, 5TH FLOOR
SAN FRANCISCO, CA

REGISTERED PROFESSIONAL ENGINEER
GEORGE ADRIAN EDPALINA
No. M38226
Exp: 03/31/27
MECHANICAL
STATE OF CALIFORNIA

Drawing Title

DETAILS - PLUMBING

Drawing No.

P6.01

SKA Project Number: 25001

TECHNOLOGY SYMBOL LIST

Abbreviations

AFF	ABOVE FINISHED FLOOR
ALS	ASSISTED LISTENING SYSTEM
AV	AUDIO VISUAL
CATV	CABLE ANTENNA TELEVISION
CAT	CATEGORY CABLE
CCTV	CLOSED CIRCUIT TELEVISION
COAX	COAXIAL
COM	COMMUNICATION
CFCI	CONTRACTOR FURNISHED CONTRACTOR INSTALLED
CFOI	CONTRACTOR FURNISHED OWNER INSTALLED
(X)	DEMOLISH
EF	ENTRANCE FACILITY
ER	EQUIPMENT ROOM
(E)	EXISTING
LC	FIBER OPTIC CONNECTOR
SC	FIBER OPTIC CONNECTOR
FDU	FIBER OPTIC DISTRIBUTION UNIT
FT	FOOT, FEET
(F)	FUTURE
GND	GROUND
HH	HANDHOLE
IN	INCH, INCHES
ICT	INFORMATION AND COMMUNICATIONS TECHNOLOGY
IT	INFORMATION TECHNOLOGY
ISP	INSIDE PLANT
LAN	LOCAL AREA NETWORK
LV	LOW VOLTAGE
MTR	MAIN TELECOMMUNICATIONS ROOM
MH	MAINTENANCE HOLE
MATV	MASTER ANTENNA TELEVISION
(N)	NEW
NTS	NOT TO SCALE
OSP	OUTSIDE PLANT
OFCI	OWNER FURNISHED, CONTRACTOR INSTALLED
OFOI	OWNER FURNISHED, OWNER INSTALLED
PTZ	PAN, TILT, ZOOM
PBB	PRIMARY BONDING BUSBAR
QTY	QUANTITY
RU	RACK UNIT
SATV	SATELLITE ANTENNA TELEVISION
SBB	SECONDARY BONDING BUSBAR
SBC	SECONDARY BONDING CONDUCTOR
TBB	TELECOMMUNICATIONS BONDING BACKBONE
TBC	TELECOMMUNICATIONS BONDING CONDUCTOR
TEBC	TELECOMMUNICATIONS EQUIPMENT BONDING CONDUCTOR
TR	TELECOMMUNICATIONS ROOM
TYP	TYPICAL
UPS	UNINTERRUPTABLE POWER SUPPLY
UON	UNLESS OTHERWISE NOTED
WP	WEATHERPROOF
WAN	WIDE AREA NETWORK
WAP	WIRELESS ACCESS POINT
WIFI	WIRELESS FIDELITY

Electronic Security

CR	ACCESS CONTROL CARD READER. PROVIDE CARD READER AND 4S OUTLET BOX WITH SINGLE GANG DEVICE RING AND 3/4"C STUBBED TO NEAREST ACCESSIBLE CEILING SPACE. PROVIDE WIRING FROM THE SERVING SECURITY SYSTEM PANEL. INSTALL AT +42" AFF, UON.
DC	DOOR CONTACT. PROVIDE MAGNETIC DOOR CONTACT AND 3/4"C STUBBED TO NEAREST ACCESSIBLE CEILING SPACE. PROVIDE WIRING FROM THE SERVING SECURITY SYSTEM PANEL. INSTALL DOOR POSITION CONTACT RECESSED IN-FRAME OR SURFACE MOUNTED.
GB	GLASS BREAK SENSOR. WALL MOUNTED. PROVIDE GLASS BREAK SENSOR AND 3/4"C STUBBED TO NEAREST ACCESSIBLE CEILING SPACE. PROVIDE WIRING FROM THE SERVING SECURITY SYSTEM PANEL.
000	IP PANORAMIC VIDEO SURVEILLANCE CAMERA. CEILING OR WALL MOUNTED. PROVIDE CAMERA AND 5S OUTLET BOX WITH SINGLE GANG DEVICE RING AND 1"C STUBBED TO NEAREST ACCESSIBLE CEILING SPACE. PROVIDE (1) CATEGORY 6A CABLE FROM THE SERVING TELECOMMUNICATIONS ROOM. FOR WALL MOUNTED APPLICATIONS, INSTALL AT +108" AFF, UON.
000	IP VIDEO SURVEILLANCE CAMERA. CEILING OR WALL MOUNTED. PROVIDE CAMERA AND 5S OUTLET BOX WITH SINGLE GANG DEVICE RING AND 1"C STUBBED TO NEAREST ACCESSIBLE CEILING SPACE. PROVIDE (1) CATEGORY 6A CABLE FROM THE SERVING TELECOMMUNICATIONS ROOM. FOR WALL MOUNTED APPLICATIONS, INSTALL AT +108" AFF, UON.
MD	MOTION DETECTOR. WALL MOUNTED. PROVIDE MOTION DETECTOR AND 3/4"C STUBBED TO NEAREST ACCESSIBLE CEILING SPACE. PROVIDE WIRING FROM THE SERVING SECURITY SYSTEM PANEL.
KP	SECURITY SYSTEM KEYPAD. PROVIDE KEYPAD AND 4S OUTLET BOX WITH SINGLE GANG DEVICE RING AND 3/4"C STUBBED TO NEAREST ACCESSIBLE CEILING SPACE. PROVIDE WIRING FROM THE SERVING SECURITY SYSTEM PANEL. INSTALL AT +42" AFF, UON.

Equipment

	PRIMARY BONDING BUSBAR (PBB) 4" X 20" X .25"

Pathways

	3/4" FIRE RATED PLYWOOD BACKBOARD
	CONDUIT AND CONDUCTORS ABOVE GRADE
	CONDUIT AND CONDUCTORS BELOW GRADE OR SLAB
	CONDUIT DOWN
	CONDUIT SLEEVE
	CONDUIT UP
	CONDUIT/WIRING CONTINUATION
PB	PULL BOX
V-01	TELECOMMUNICATIONS VAULT IN OUTSIDE PLANT (OSP)
SM12	12-STRAND SINGLEMODE FIBER CABLE.
CAT6A	CATEGORY 6A CABLING.
SEC	SECURITY DEVICE CABLING
	CABLE RUNWAY, WIDTH AS INDICATED

Reference Symbols

1 XXX	DETAIL NUMBER AND SHEET LOCATION
1	KEYED NOTES
A XXX	SECTION NUMBER AND SHEET LOCATION

Telecommunications

	TELECOMMUNICATIONS OUTLET FLOOR BOX. PROVIDE 1"C STUBBED TO NEAREST ACCESSIBLE CEILING SPACE AND (2) CATEGORY 6A CABLES FROM THE SERVING TELECOMMUNICATIONS ROOM.
	TELECOMMUNICATIONS OUTLET. PROVIDE 5S OUTLET BOX WITH SINGLE GANG DEVICE RING AND 1"C STUBBED TO NEAREST ACCESSIBLE CEILING SPACE. PROVIDE (2) CATEGORY 6A CABLES FROM THE SERVING TELECOMMUNICATIONS ROOM. INSTALL AT +18" AFF, UON.
WAP	TELECOMMUNICATIONS OUTLET. CEILING MOUNTED. FOR USE WITH OFCI WIRELESS ACCESS POINT. PROVIDE 5S OUTLET BOX WITH SINGLE GANG DEVICE RING AND 1"C STUBBED TO NEAREST ACCESSIBLE CEILING SPACE. PROVIDE (2) CATEGORY 6A CABLES FROM THE SERVING TELECOMMUNICATIONS ROOM.
WAP	TELECOMMUNICATIONS OUTLET. WALL MOUNTED. FOR USE WITH OFCI WIRELESS ACCESS POINT, WALL MOUNTED. PROVIDE 5S OUTLET BOX WITH SINGLE GANG DEVICE RING AND 1"C STUBBED TO NEAREST ACCESSIBLE CEILING SPACE. PROVIDE (2) CATEGORY 6A CABLES FROM THE SERVING TELECOMMUNICATIONS ROOM. INSTALL AT +108" AFF, UON.

GENERAL TECHNOLOGY NOTES

A. WITHIN THIS PACKAGE TECHNOLOGY IS USED AS AN INCLUSIVE TERM THAT ENCOMPASSES THE INFRASTRUCTURE COMPONENTS OF TELECOMMUNICATIONS AND SECURITY SYSTEMS.

B. TECHNOLOGY SYSTEM COMPONENTS ARE SHOWN DIAGRAMMATICALLY. DEVICE, HARDWARE, AND OUTLET LOCATIONS ARE APPROXIMATE UNLESS SPECIFICALLY DIMENSIONED.

C. COORDINATE WORK IN FIELD WITH ALL OTHER TRADES.

D. UNLESS OTHERWISE NOTED CONSTRUCTION DETAILS SHOW TYPICAL INSTALLATION METHODS AND APPLY TO ALL TECHNOLOGY WORK INCLUDED IN THIS PACKAGE.

E. CONTRACT DOCUMENTS CONSIST OF THE DRAWINGS AND SPECIFICATIONS. REFER TO DIVISION 27 - COMMUNICATIONS AND DIVISION 28 - ELECTRONIC SAFETY AND SECURITY FOR ADDITIONAL INFORMATION AND REQUIREMENTS.

F. THE TECHNOLOGY DRAWINGS ARE PART OF A LARGER SET OF DRAWINGS WHICH, WHEN COMPLETE, CONSISTS OF THE FULL COMPLEMENT OF DRAWINGS LISTED IN THE INDEX OF DRAWINGS. PARTIAL SETS OF DRAWINGS, NOT INCLUSIVE OF ALL DISCIPLINES, ARE CONSIDERED INCOMPLETE AND SHOULD NOT BE DISTRIBUTED OR REFERENCED.

G. WORK PERFORMED IN EXISTING BUILDINGS SHALL BE SCHEDULED WITH OWNER IN ADVANCE.

H. PRIOR TO PREPARING A BID CONTRACTOR SHALL PERFORM A SITE VISIT TO THOROUGHLY REVIEW EXISTING CONDITIONS. THIS REVIEW SHALL INCLUDE THE PROPOSED OUTSIDE PLANT PATHWAY ROUTING AND SITE MPOE ROOM WITHIN THE CHERRY HILL SOBERING CENTER.

I. UNLESS OTHERWISE NOTED STRUCTURED CABLING SYSTEM COMPONENTS SHALL BE CONCEALED IN FINISHED AREAS.

J. WHERE WORK WILL DISTURB AREAS OUTSIDE THE ESTABLISHED BOUNDARY LINE FOR THE PROJECT CONTRACTOR SHALL COORDINATE WITH THE ARCHITECT AND OWNER PRIOR TO PERFORMING WORK.

K. STRUCTURED CABLING SYSTEM PATHWAYS INCLUDING, BUT NOT LIMITED TO, CONDUITS, J-HOOKS, AND CABLE TRAYS, SHALL NOT BE FILLED BEYOND 40% OF THEIR MAXIMUM CAPACITY. CONDUITS, WHEN CONTAINING EXACTLY (2) CABLES SHALL NOT EXCEED A MAXIMUM FILL RATIO OF 31%.

L. PROVIDE PROTECTIVE INSULATING BUSHINGS AT ALL OPEN ENDS OF CONDUIT STUB-OUTS SERVING TECHNOLOGY SYSTEMS. BUSHINGS SHALL BE INSTALLED PRIOR TO CABLE INSTALLATION.

M. TECHNOLOGY DEVICES INSTALLED WITHIN OUTSIDE PLANT (OSP) ENVIRONMENTS SHALL BE PROVIDED WITH SURGE PROTECTION. INSTALL IN-LINE SURGE PROTECTIVE DEVICES (SPDs) ON BOTH THE EQUIPMENT SIDE AND THE NETWORK/CABLE PLANT SIDE OF THE HORIZONTAL CABLING SERVING EACH DEVICE. ALL SURGE PROTECTIVE DEVICES SHALL BE RATED FOR AND FULLY COMPATIBLE WITH PoE+ (IEEE 802.3at) POWER DELIVERY AND GIGABIT ETHERNET (1000BASE-T) TRANSMISSION.

N. DEMOLITION OF TECHNOLOGY STRUCTURED CABLING SYSTEM COMPONENTS INCLUDES, BUT IS NOT IS LIMITED TO, THE COMPLETE REMOVAL AND DISPOSAL OF APPLICABLE TECHNOLOGY OUTLETS, TECHNOLOGY FINISH PLATES, TECHNOLOGY HORIZONTAL CABLING AND WIRING FROM THE OUTLET/DEVICE LOCATION TO THE POINT OF ORIGINATION, COMMUNICATIONS BACKBONE CABLING, AND SECONDARY TECHNOLOGY PATHWAY SYSTEM HARDWARE SUCH AS OPEN-TOP CABLE SUPPORTS.

O. TELECOMMUNICATIONS FLOOR MOUNTED OUTLETS SHALL BE INSTALLED WITHIN COMBINED POWER/DATA FLOOR BOXES. MAINTAIN SEPARATE POWER/DATA COMPARTMENTS AND PATHWAYS IN ACCORDANCE WITH APPLICABLE CODE REQUIREMENTS. COORDINATE FLOOR BOX TYPE, SIZE, LOCATION, AND DEVICE REQUIREMENTS WITH ELECTRICAL PRIOR TO INSTALLATION.

SHEET INDEX

T0.01	SYMBOL LIST AND GENERAL NOTES - TECHNOLOGY
T1.01	SITE PLAN - TECHNOLOGY
TD1.00	BASEMENT DEMOLITION PLAN - TECHNOLOGY
TD1.01	LEVEL 1 DEMOLITION PLAN - TECHNOLOGY
TD1.02	LEVEL 1 DEMOLITION PLAN - TECHNOLOGY
T2.01	LEVEL 01 FLOOR PLAN - TECHNOLOGY
T2.02	LEVEL 02 FLOOR PLAN - TECHNOLOGY
T3.01	LEVEL 01 RCP - TECHNOLOGY
T3.02	LEVEL 02 RCP - TECHNOLOGY
T4.01	ENLARGED PLANS AND SECTIONS - TECHNOLOGY
T5.01	RISER DIAGRAMS - TECHNOLOGY
T6.01	DETAILS - TECHNOLOGY
T6.02	DETAILS - TECHNOLOGY
T6.03	DETAILS - TECHNOLOGY

CLIENT

ALAMEDA COUNTY

INTERFACE ENGINEERING
PROJECT 2025-1084
CONTACT Kris Howard, RCDD
1999 Harrison Street, Suite 550
Oakland, CA 94612
TEL 415.489.7240
www.interfaceengineering.com

NOTE: If this drawing is not 22"x34" it has been revised from its original size and the scales noted on drawing/details are no longer applicable.
© 2022 Shah Kawasaki Architects

Revision Number	DATE	ISSUE DESCRIPTION
	09/03/2026	PERMIT SET

Project

WHITECOTTON COTTAGE REHABILITATION
15400 FOOTHILL BLVD
SAN LEANDRO, CA 94578

Architect of Record

P&T

Consultant

PAGE & TURNBULL
170 MAIDEN LANE, 5TH FLOOR
SAN FRANCISCO, CA

REGISTERED PROFESSIONAL ENGINEER
JASON LAU
No. E16806
Exp: 09/30/28
ELECTRICAL
STATE OF CALIFORNIA

Drawing Title
SYMBOL LIST AND GENERAL NOTES - TECHNOLOGY

Drawing No.
T0.01

SKA Project Number: 25001

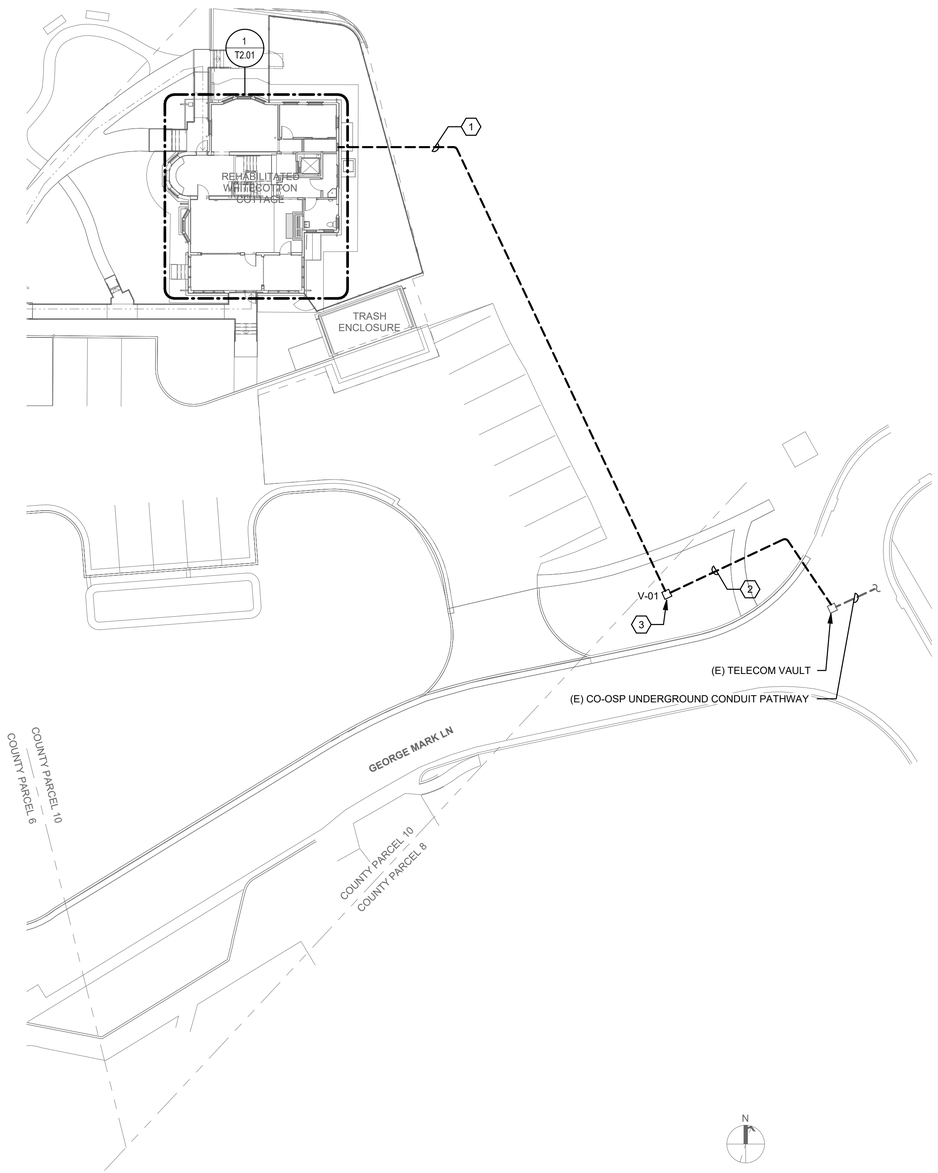

1 SITE PLAN - TECHNOLOGY

0' 8' 16' 32'

1" = 20'-0"

GENERAL SHEET NOTES

A. TELECOMMUNICATIONS OUTSIDE PLANT PATHWAY COMPONENTS AND ROUTING ARE SHOWN DIAGRAMMATICALLY. COORDINATE EXACT ROUTING WITH CIVIL.

B. EXISTING TELECOMMUNICATIONS OUTSIDE PLANT PATHWAY COMPONENTS AND ROUTING ARE BASED ON AVAILABLE AS-BUILT DOCUMENTATION AND LIMITED FIELD OBSERVATION. VERIFY IN FIELD PRIOR TO BID.

C. EXISTING CO-OSP CONDUIT PATHWAY IS UNDERSTOOD TO ROUTE TO CHERRY HILL SOBERING CENTER MPOE. VERIFY IN FIELD.

D. MPOE IS LOCATED WITHIN CHERRY HILL SOBERING CENTER. COORDINATE EXACT LOCATION IN FIELD.

SHEET KEYNOTES

1. (2) 2" CONDUITS FROM IT CLOSET 104 TO VAULT V-01.
2. (2) 2" CONDUITS FROM VAULT V-01 TO (E) TELECOM VAULT.
3. 2' X 2' X 3' TELECOMMUNICATIONS VAULT.

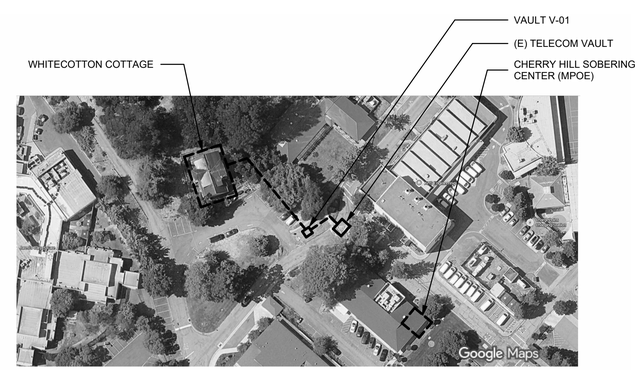

2 OVERALL SITE PLAN - TECHNOLOGY

0' 4' 8' 16'

12" = 1'-0"

CLIENT

GENERAL SERVICES AGENCY COUNTY OF ALAMEDA GSA

ALAMEDA COUNTY

INTERFACE ENGINEERING

PROJECT 2025-1084
CONTACT Kris Howard, RCDD

1999 Harrison Street, Suite 550
Oakland, CA 94612
TEL 415.489.7240
www.interfaceengineering.com

NOTE: If this drawing is not 22"x34" it has been revised from its original size and the scales noted on drawing/details are no longer applicable.

© 2022 Shah Kawasaki Architects

Revision Number	DATE	ISSUE DESCRIPTION
	09/03/2026	PERMIT SET

Project

WHITECOTTON COTTAGE REHABILITATION

15400 FOOTHILL BLVD
SAN LEANDRO, CA 94578

Architect of Record

P&T

Consultant

PAGE & TURNBULL
170 MAIDEN LANE, 5TH FLOOR
SAN FRANCISCO, CA

REGISTERED PROFESSIONAL ENGINEER
JASON LAU
No. E16806
Exp: 09/30/28
ELECTRICAL
STATE OF CALIFORNIA

Drawing Title

SITE PLAN - TECHNOLOGY

Drawing No.

T1.01

SKA Project Number: 25001

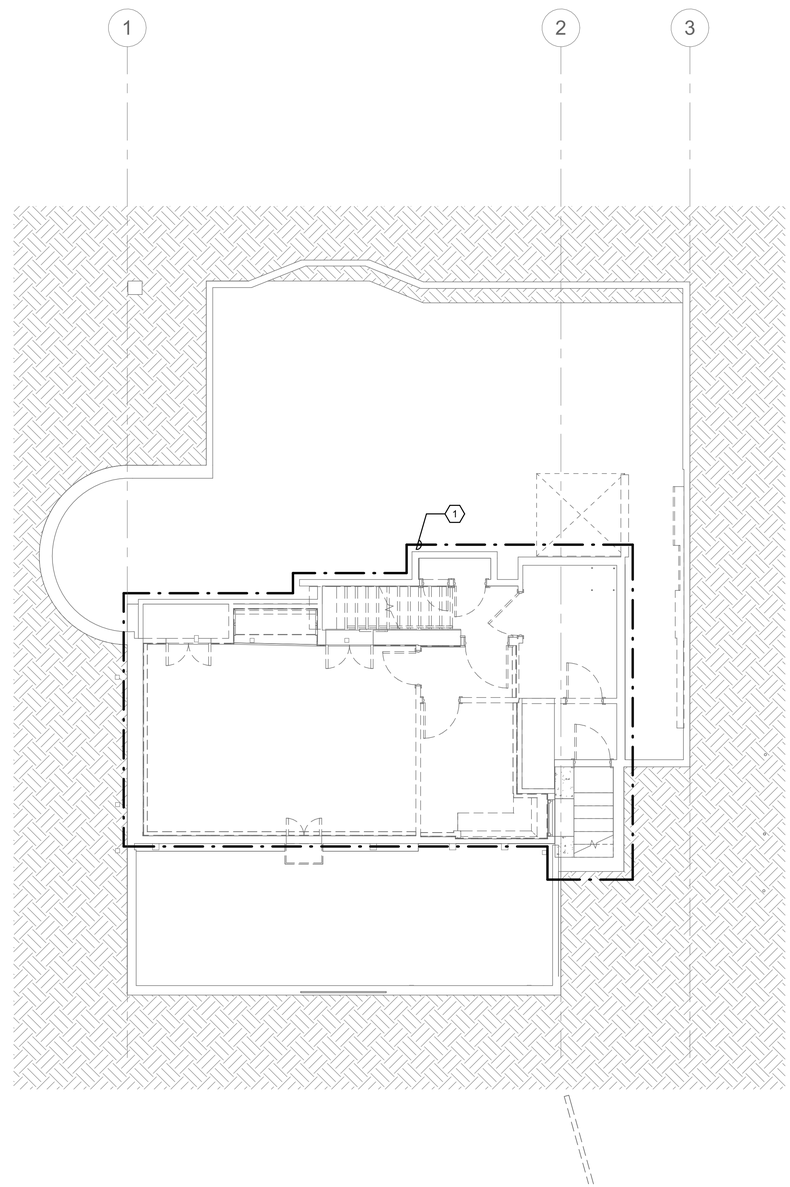

1 BASEMENT DEMOLITION PLAN - TECHNOLOGY

0' 4' 8' 16'
3/16" = 1'-0"

GENERAL SHEET NOTES:

A. COORDINATE DEMOLITION WORK WITH ARCHITECTURAL DRAWINGS PRIOR TO COMMENCEMENT OF WORK.

B. DESIGN DRAWINGS ARE BASED ON ASSESSMENT OF AVAILABLE AS-BUILT DRAWINGS. AS-BUILT DRAWINGS MAY NOT ACCURATELY REFLECT ACTUAL CONDITIONS. FIELD VERIFY ALL CONDITIONS PRIOR TO COMMENCEMENT OF WORK.

SHEET KEYNOTES

1. PERFORM THE COMPLETE DEMOLITION OF TECHNOLOGY EQUIPMENT, CABLING, AND PATHWAY COMPONENTS FROM EACH DEVICE AND/OR OUTLET LOCATION TO THE POINT OF ORIGINATION.

CLIENT

GENERAL SERVICES AGENCY GSA COUNTY OF ALAMEDA

ALAMEDA COUNTY

INTERFACE ENGINEERING
PROJECT 2025-1084
CONTACT Kris Howard, RCDD
1999 Harrison Street, Suite 550
Oakland, CA 94612
TEL 415.489.7240
www.interfaceengineering.com

NOTE: If this drawing is not 22"x34" it has been revised from its original size and the scales noted on drawing/details are no longer applicable.

© 2022 Shah Kawasaki Architects

Revision Number	DATE	ISSUE DESCRIPTION
	09/03/2026	PERMIT SET

Project

WHITECOTTON COTTAGE REHABILITATION

15400 FOOTHILL BLVD
SAN LEANDRO, CA 94578

Architect of Record

P&T

Consultant

PAGE & TURNBULL
170 MAIDEN LANE, 5TH FLOOR
SAN FRANCISCO, CA

REGISTERED PROFESSIONAL ENGINEER
JASON LAU
No. E16808
Exp: 09/30/28
ELECTRICAL
STATE OF CALIFORNIA

Drawing Title

BASEMENT DEMOLITION PLAN - TECHNOLOGY

Drawing No.

TD1.00

SKA Project Number: 25001

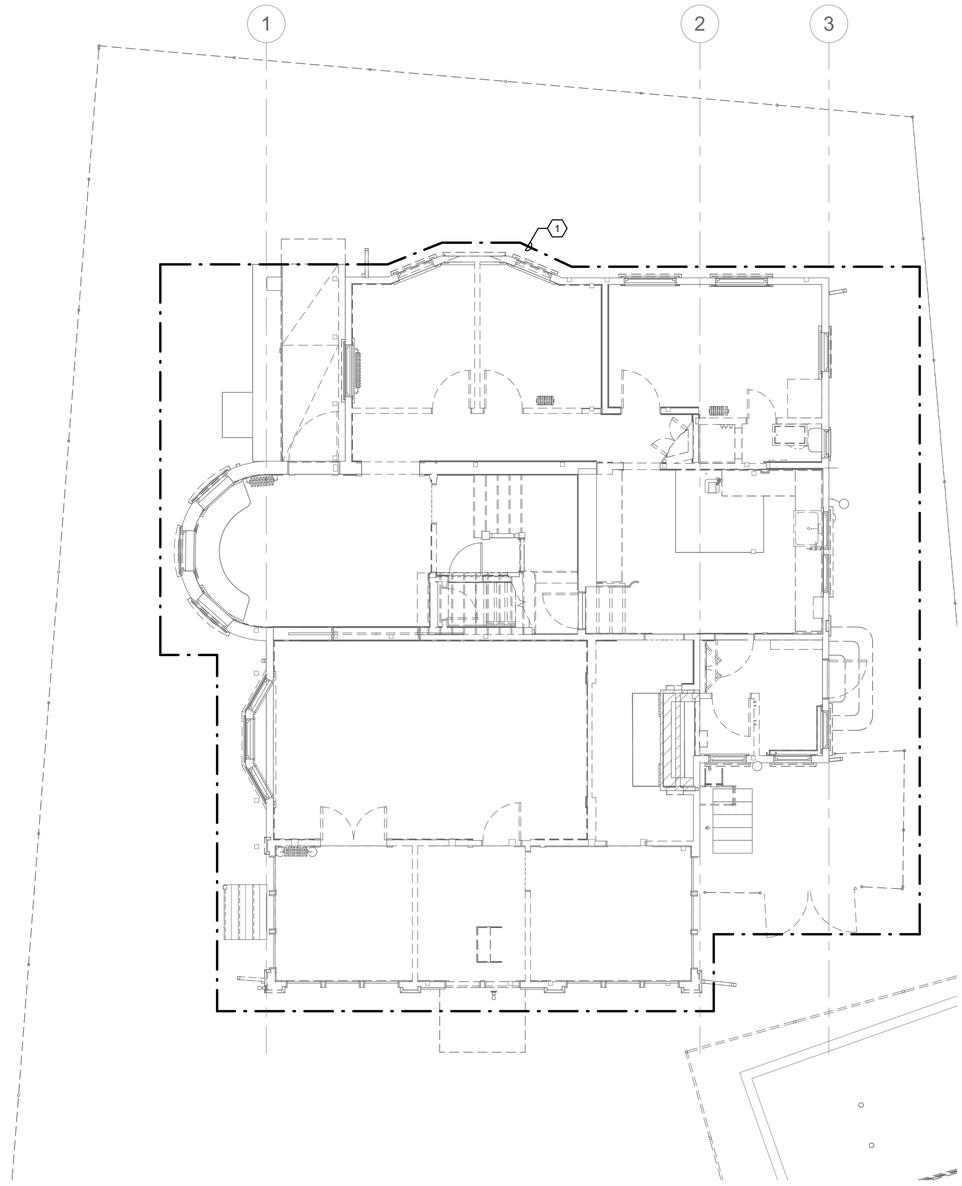

1 LEVEL 1 DEMOLITION PLAN - TECHNOLOGY

0' 4' 8' 12'
3/16" = 1'-0"

GENERAL SHEET NOTES:

A. COORDINATE DEMOLITION WORK WITH ARCHITECTURAL DRAWINGS PRIOR TO COMMENCEMENT OF WORK.

B. DESIGN DRAWINGS ARE BASED ON ASSESSMENT OF AVAILABLE AS-BUILT DRAWINGS. AS-BUILT DRAWINGS MAY NOT ACCURATELY REFLECT ACTUAL CONDITIONS. FIELD VERIFY ALL CONDITIONS PRIOR TO COMMENCEMENT OF WORK.

SHEET KEYNOTES

1. PERFORM THE COMPLETE DEMOLITION OF TECHNOLOGY EQUIPMENT, CABLING, AND PATHWAY COMPONENTS FROM EACH DEVICE AND/OR OUTLET LOCATION TO THE POINT OF ORIGINATION.

CLIENT

GENERAL SERVICES AGENCY GSA COUNTY OF ALAMEDA

ALAMEDA COUNTY

INTERFACE ENGINEERING
PROJECT 2025-1084
CONTACT Kris Howard, RCDD
1999 Harrison Street, Suite 550
Oakland, CA 94612
TEL 415.489.7240
www.interfaceengineering.com

NOTE: If this drawing is not 22"x34" it has been revised from its original size and the scales noted on drawing/details are no longer applicable.

© 2022 Shah Kawasaki Architects

Revision Number	DATE	ISSUE DESCRIPTION
	09/03/2026	PERMIT SET

Project

WHITECOTTON COTTAGE REHABILITATION

15400 FOOTHILL BLVD
SAN LEANDRO, CA 94578

Architect of Record

P&T

Consultant

PAGE & TURNBULL
170 MAIDEN LANE, 5TH FLOOR
SAN FRANCISCO, CA

REGISTERED PROFESSIONAL ENGINEER
JASON LAU
No. E16806
Exp: 09/30/28
ELECTRICAL
STATE OF CALIFORNIA

Drawing Title

LEVEL 1 DEMOLITION PLAN - TECHNOLOGY

Drawing No.

TD1.01

SKA Project Number: 25001

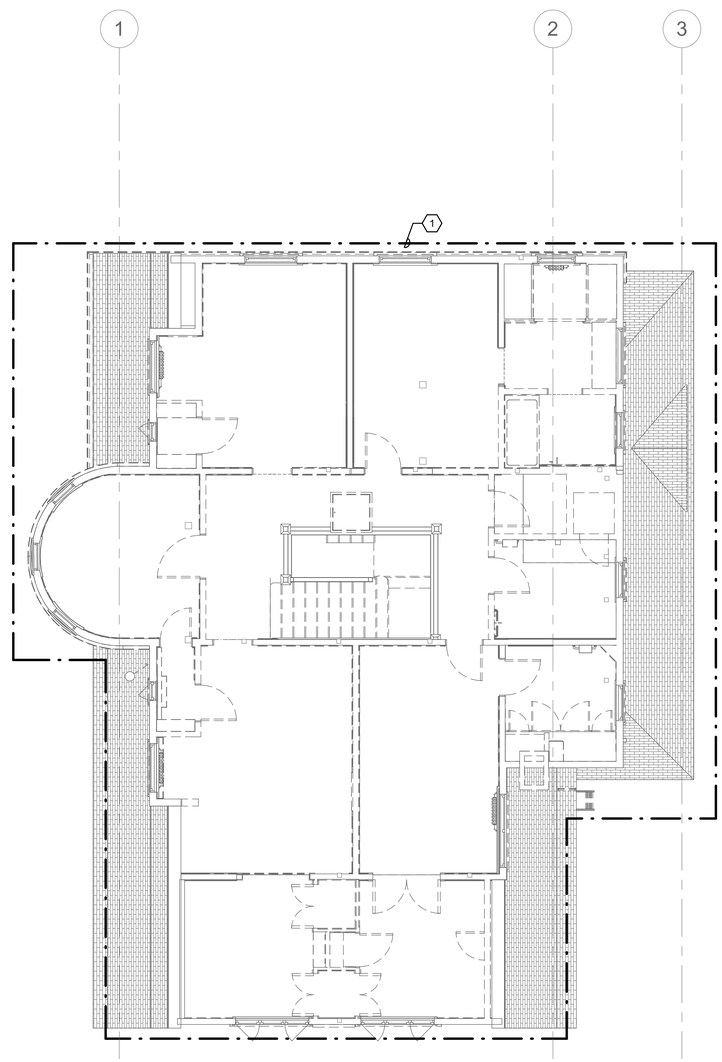

1 LEVEL 2 DEMOLITION PLAN - TECHNOLOGY

0' 4' 8' 12'
3/16" = 1'-0"

GENERAL SHEET NOTES:

A. COORDINATE DEMOLITION WORK WITH ARCHITECTURAL DRAWINGS PRIOR TO COMMENCEMENT OF WORK.

B. DESIGN DRAWINGS ARE BASED ON ASSESSMENT OF AVAILABLE AS-BUILT DRAWINGS. AS-BUILT DRAWINGS MAY NOT ACCURATELY REFLECT ACTUAL CONDITIONS. FIELD VERIFY ALL CONDITIONS PRIOR TO COMMENCEMENT OF WORK.

SHEET KEYNOTES

1. PERFORM THE COMPLETE DEMOLITION OF TECHNOLOGY EQUIPMENT, CABLING, AND PATHWAY COMPONENTS FROM EACH DEVICE AND/OR OUTLET LOCATION TO THE POINT OF ORIGINATION.

CLIENT

GENERAL SERVICES AGENCY GSA COUNTY OF ALAMEDA

ALAMEDA COUNTY

INTERFACE ENGINEERING
PROJECT 2025-1084
CONTACT Kris Howard, RCDD
1999 Harrison Street, Suite 550
Oakland, CA 94612
TEL 415.489.7240
www.interfaceengineering.com

NOTE: If this drawing is not 22"x34" it has been revised from its original size and the scales noted on drawing/details are no longer applicable.

© 2022 Shah Kawasaki Architects

Revision Number	DATE	ISSUE DESCRIPTION
	09/03/2026	PERMIT SET

Project

WHITECOTTON COTTAGE REHABILITATION

15400 FOOTHILL BLVD
SAN LEANDRO, CA 94578

Architect of Record

P&T

Consultant

PAGE & TURNBULL
170 MAIDEN LANE, 5TH FLOOR
SAN FRANCISCO, CA

REGISTERED PROFESSIONAL ENGINEER
JASON LAU
No. E16806
Exp: 09/30/28
ELECTRICAL
STATE OF CALIFORNIA

Drawing Title

LEVEL 1 DEMOLITION PLAN - TECHNOLOGY

Drawing No.

TD1.02

SKA Project Number: 25001

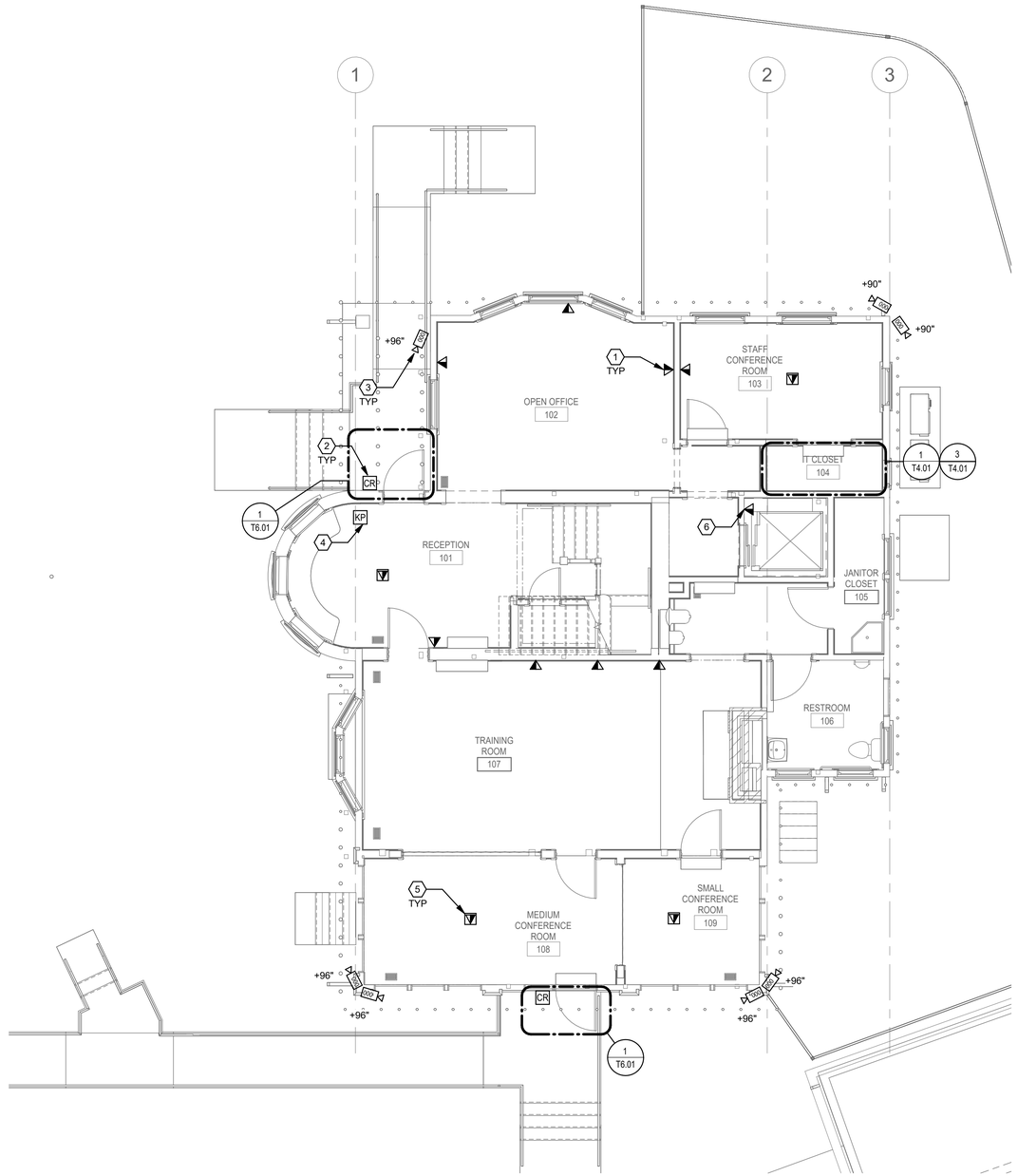

1 LEVEL 01 FLOOR PLAN - TECHNOLOGY

0' 4' 8' 16'
3/16" = 1'-0"

GENERAL SHEET NOTES

A. COORDINATE TECHNOLOGY DEVICE AND OUTLET LOCATIONS WITH ARCHITECTURAL PRIOR TO INSTALLATION.

B. CABLING FOR TECHNOLOGY DEVICE AND OUTLET LOCATIONS ORIGINATES FROM IT CLOSET 104.

SHEET KEYNOTES

1. TELECOMMUNICATIONS OUTLET LOCATION.
2. ACCESS CONTROL CARD READER LOCATION.
3. SURVEILLANCE CAMERA LOCATION.
4. SECURITY SYSTEM KEYPAD LOCATION.
5. TELECOMMUNICATIONS FLOOR OUTLET LOCATION. COMBINED WITH ELECTRICAL. COORDINATE SPECIFIC REQUIREMENTS WITH ELECTRICAL.
6. TELECOMMUNICATIONS OUTLET LOCATION. USED TO PROVIDE EMERGENCY PHONE SERVICE WITHIN ELEVATOR CAB. INSTALL CABLING TO ELEVATOR CONTROLLER. COORDINATE REQUIREMENTS WITH ELEVATOR INTEGRATOR.

CLIENT

GENERAL SERVICES AGENCY GSA COUNTY OF ALAMEDA

ALAMEDA COUNTY

INTERFACE ENGINEERING
PROJECT 2025-1084
CONTACT Kris Howard, RCDD
1999 Harrison Street, Suite 550
Oakland, CA 94612
TEL 415.489.7240
www.interfaceengineering.com

NOTE: If this drawing is not 22"x34" it has been revised from its original size and the scales noted on drawing/details are no longer applicable.

© 2022 Shah Kawasaki Architects

Revision Number	DATE	ISSUE DESCRIPTION
	09/03/2026	PERMIT SET

Project

WHITECOTTON COTTAGE REHABILITATION

15400 FOOTHILL BLVD
SAN LEANDRO, CA 94578

Architect of Record

P&T

Consultant

PAGE & TURNBULL
170 MAIDEN LANE, 5TH FLOOR
SAN FRANCISCO, CA

REGISTERED PROFESSIONAL ENGINEER
JASON LAU
No. E16806
Exp: 09/30/28
ELECTRICAL
STATE OF CALIFORNIA

Drawing Title

LEVEL 01 FLOOR PLAN - TECHNOLOGY

Drawing No.

T2.01

SKA Project Number: 25001

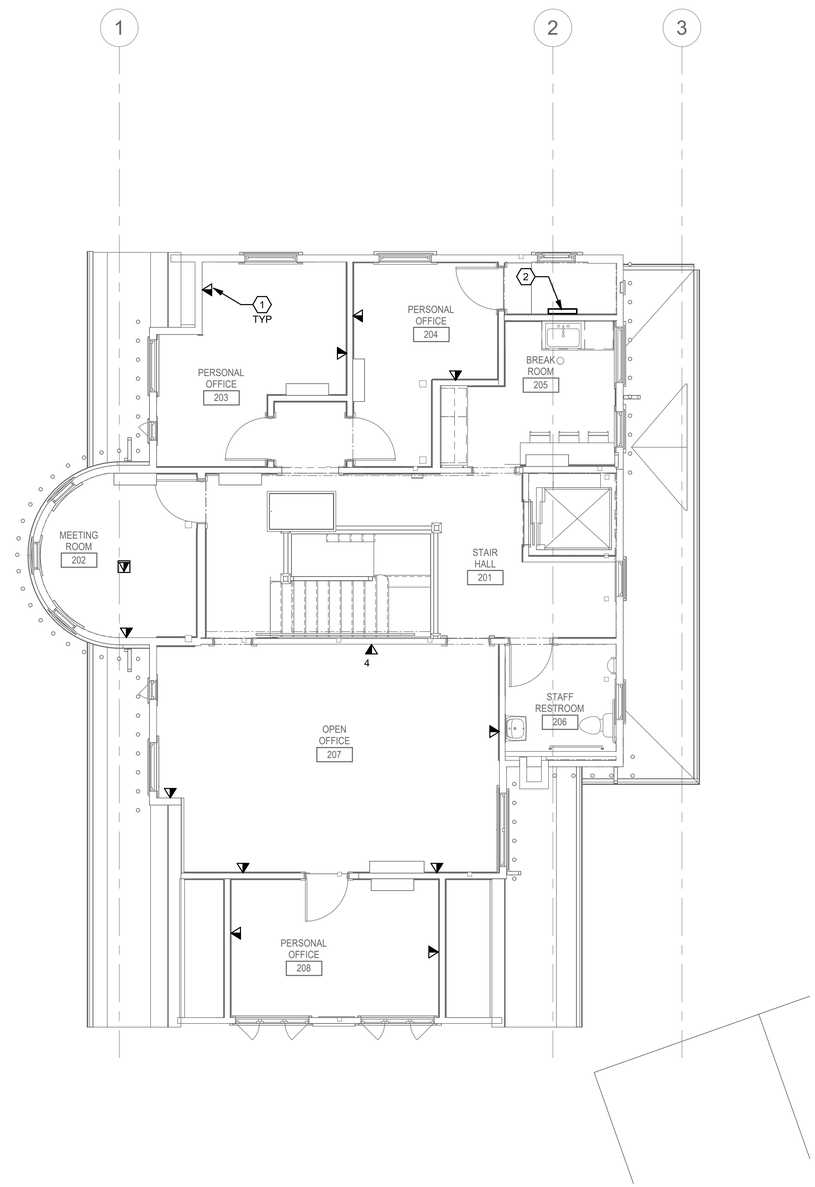

1 LEVEL 02 FLOOR PLAN - TECHNOLOGY

0' 4' 8' 16'

3/16" = 1'-0"

GENERAL SHEET NOTES

A. COORDINATE TECHNOLOGY DEVICE AND OUTLET LOCATIONS WITH ARCHITECTURAL PRIOR TO INSTALLATION.

B. CABLING FOR TECHNOLOGY DEVICE AND OUTLET LOCATIONS ORIGINATES FROM IT CLOSET 104.

C. PB-01 IS USED TO ROUTE TECHNOLOGY CABLING FROM LEVEL 02 TO IT CLOSET 104.

SHEET KEYNOTES

1. TELECOMMUNICATIONS OUTLET LOCATION.
2. MIN. 36"H x 24"W X 4"D PULL BOX. (PB-01).

CLIENT

GENERAL SERVICES AGENCY GSA COUNTY OF ALAMEDA

ALAMEDA COUNTY

INTERFACE ENGINEERING

PROJECT 2025-1084
CONTACT Kris Howard, RCDD

1999 Harrison Street, Suite 550
Oakland, CA 94612
TEL 415.489.7240
www.interfaceengineering.com

NOTE: If this drawing is not 22"x34" it has been revised from its original size and the scales noted on drawing/details are no longer applicable.

© 2022 Shah Kawasaki Architects

Revision Number	DATE	ISSUE DESCRIPTION
	09/03/2026	PERMIT SET

Project

WHITECOTTON COTTAGE REHABILITATION

15400 FOOTHILL BLVD
SAN LEANDRO, CA 94578

Architect of Record

P&T

Consultant

PAGE & TURNBULL
170 MAIDEN LANE, 5TH FLOOR
SAN FRANCISCO, CA

REGISTERED PROFESSIONAL ENGINEER
JASON LAU
No. E16806
Exp: 09/30/28
ELECTRICAL
STATE OF CALIFORNIA

Drawing Title

LEVEL 02 FLOOR PLAN - TECHNOLOGY

Drawing No.

T2.02

SKA Project Number: 25001

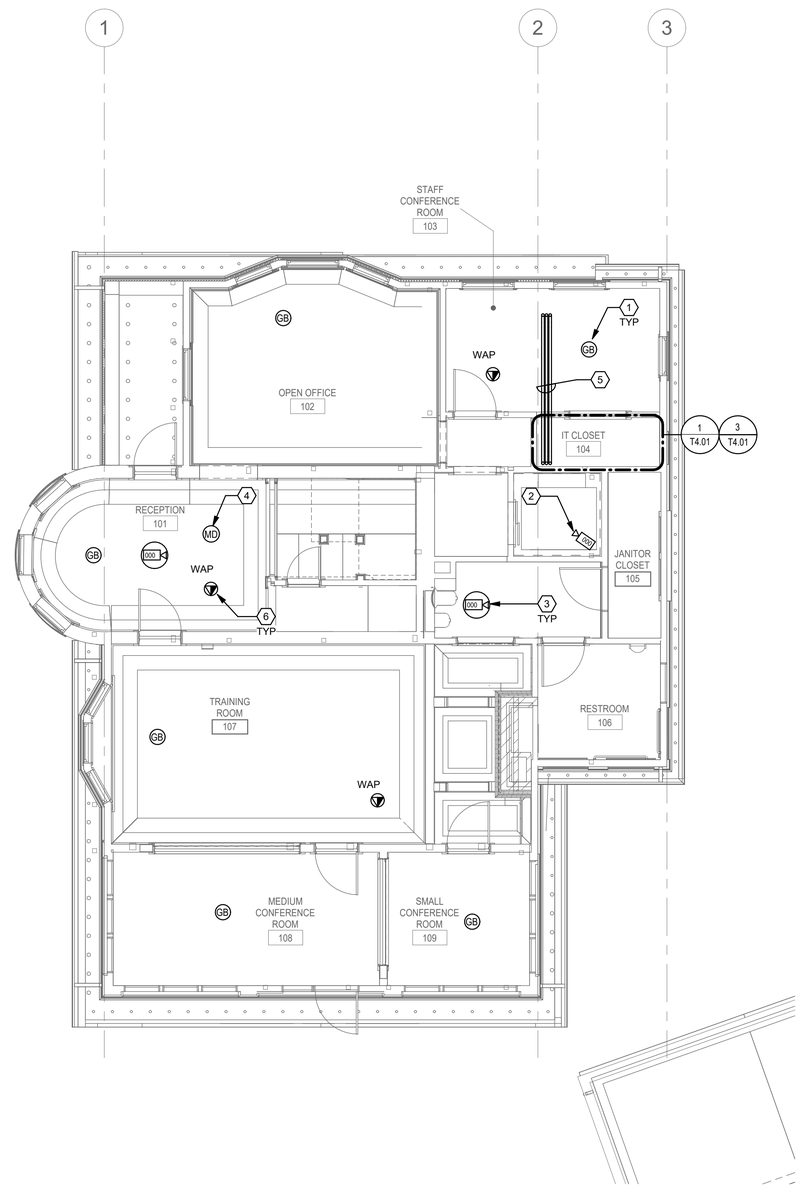

1 LEVEL 01 RCP - TECHNOLOGY

0' 4' 8' 16'

3/16" = 1'-0"

GENERAL SHEET NOTES

A. COORDINATE TECHNOLOGY DEVICE AND OUTLET LOCATIONS WITH ARCHITECTURAL PRIOR TO INSTALLATION.

B. CABLING FOR TECHNOLOGY DEVICE AND OUTLET LOCATIONS ORIGINATES FROM IT CLOSET 104.

C. QUANTITIES AND LOCATIONS SHOWN FOR WIRELESS ACCESS POINTS ARE FOR BUDGETING AND COORDINATION PURPOSES. COORDINATE FINAL QUANTITIES AND LOCATION OF WIRELESS ACCESS POINTS WITH OWNER.

SHEET KEYNOTES

1. CEILING MOUNTED GLASS BREAK SENSOR LOCATION.
2. CEILING MOUNTED SURVEILLANCE CAMERA LOCATION. INSTALLED WITHIN ELEVATOR CAB. INSTALL CABLING TO ELEVATOR CONTROLLER. COORDINATE REQUIREMENTS WITH ELEVATOR INTEGRATOR.
3. CEILING MOUNTED PANORAMIC SURVEILLANCE CAMERA LOCATION.
4. CEILING MOUNTED MOTION DETECTOR LOCATION.
5. (3) 2" CONDUITS FROM IT CLOSET 104 TO PULL BOX (PB-01) IN ELECTRICAL ROOM ON FLOOR ABOVE.
6. CEILING MOUNTED WIRELESS ACCESS POINT LOCATION.

CLIENT

GENERAL SERVICES AGENCY GSA COUNTY OF ALAMEDA

ALAMEDA COUNTY

INTERFACE ENGINEERING
PROJECT 2025-1084
CONTACT Kris Howard, RCDD
1999 Harrison Street, Suite 550
Oakland, CA 94612
TEL 415.489.7240
www.interfaceengineering.com

NOTE: If this drawing is not 22"x34" it has been revised from its original size and the scales noted on drawing/details are no longer applicable.

© 2022 Shah Kawasaki Architects

Revision Number	DATE	ISSUE DESCRIPTION
	09/03/2026	PERMIT SET

Project

WHITECOTTON COTTAGE REHABILITATION

15400 FOOTHILL BLVD
SAN LEANDRO, CA 94578

Architect of Record

P&T

Consultant

PAGE & TURNBULL
170 MAIDEN LANE, 5TH FLOOR
SAN FRANCISCO, CA

REGISTERED PROFESSIONAL ENGINEER
JASON LAU
No. E16806
Exp: 09/30/28
ELECTRICAL
STATE OF CALIFORNIA

Drawing Title

LEVEL 01 RCP - TECHNOLOGY

Drawing No.

T3.01

SKA Project Number: 25001

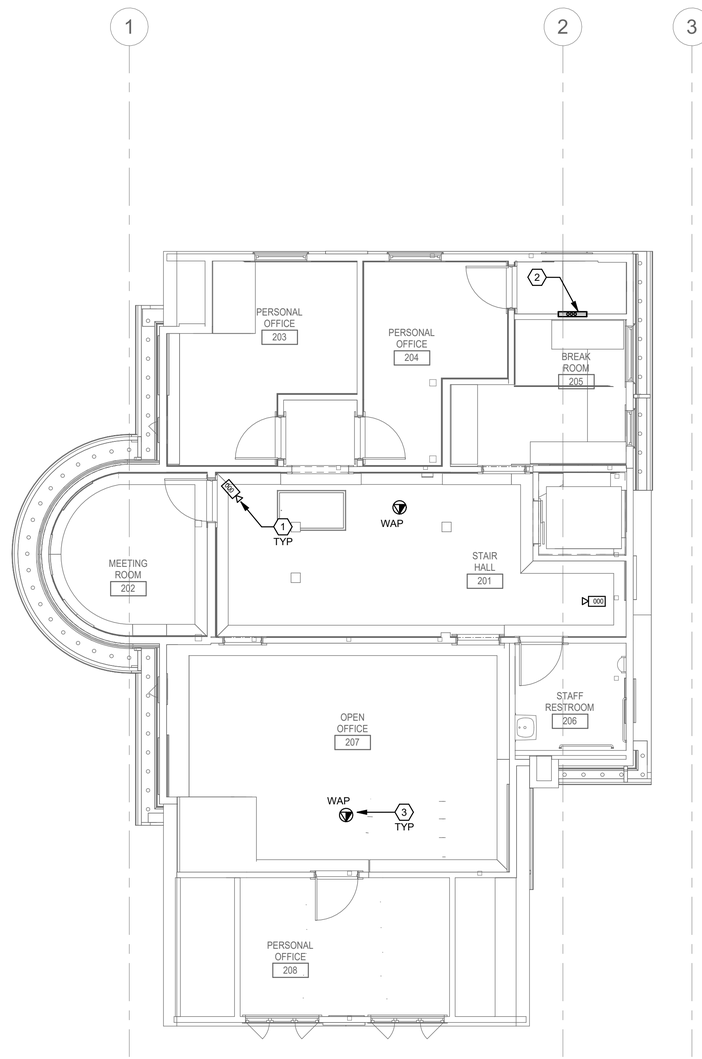

1 LEVEL 02 RCP - TECHNOLOGY

0' 4' 8' 16'
3/16" = 1'-0"

GENERAL SHEET NOTES

A. COORDINATE TECHNOLOGY DEVICE AND OUTLET LOCATIONS WITH ARCHITECTURAL PRIOR TO INSTALLATION.

B. CABLING FOR TECHNOLOGY DEVICE AND OUTLET LOCATIONS ORIGINATES FROM IT CLOSET 104.

C. PB-01 IS USED TO ROUTE TECHNOLOGY CABLING FROM LEVEL 02 TO IT CLOSET 104.

D. QUANTITIES AND LOCATIONS SHOWN FOR WIRELESS ACCESS POINTS ARE FOR BUDGETING AND COORDINATION PURPOSES. COORDINATE FINAL QUANTITIES AND LOCATION OF WIRELESS ACCESS POINTS WITH OWNER.

SHEET KEYNOTES

1. CEILING MOUNTED SURVEILLANCE CAMERA LOCATION.
2. MIN. 36"H x 24"W X 4"D PULL BOX. (PB-01).
3. CEILING MOUNTED WIRELESS ACCESS POINT LOCATION.

CLIENT

GENERAL SERVICES AGENCY GSA COUNTY OF ALAMEDA

ALAMEDA COUNTY

INTERFACE ENGINEERING

PROJECT 2025-1084
CONTACT Kris Howard, RCDD

1999 Harrison Street, Suite 550
Oakland, CA 94612
TEL 415.489.7240
www.interfaceengineering.com

NOTE: If this drawing is not 22"x34" it has been revised from its original size and the scales noted on drawing/details are no longer applicable.

© 2022 Shah Kawasaki Architects

Revision Number	DATE	ISSUE DESCRIPTION
	09/03/2026	PERMIT SET

Project

WHITECOTTON COTTAGE REHABILITATION

15400 FOOTHILL BLVD
SAN LEANDRO, CA 94578

Architect of Record

P&T

Consultant

PAGE & TURNBULL
170 MAIDEN LANE, 5TH FLOOR
SAN FRANCISCO, CA

REGISTERED PROFESSIONAL ENGINEER
JASON LAU
No. E16806
Exp: 09/30/28
ELECTRICAL
STATE OF CALIFORNIA

Drawing Title

LEVEL 02 RCP - TECHNOLOGY

Drawing No.

T3.02

SKA Project Number: 25001

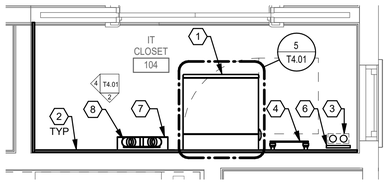

1 IT CLOSET 104 - EQUIPMENT LAYOUT

0' 1' 2' 4'
1/2" = 1'-0"

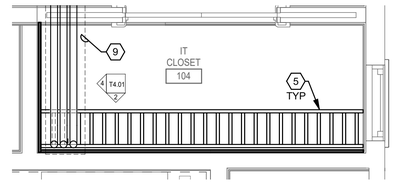

3 IT CLOSET 104 - CABLE RUNWAY LAYOUT

0' 1' 2' 4'
1/2" = 1'-0"

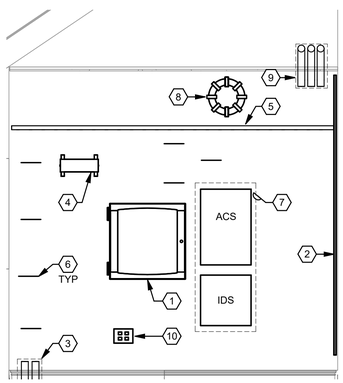

2 IT CLOSET 104 - SOUTH WALL ELEVATION VIEW

0' 1' 2' 4'
1/2" = 1'-0"

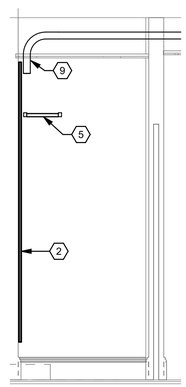

4 IT CLOSET 104 - WEST WALL ELEVATION VIEW

0' 4' 8' 16'
1/2" = 1'-0"

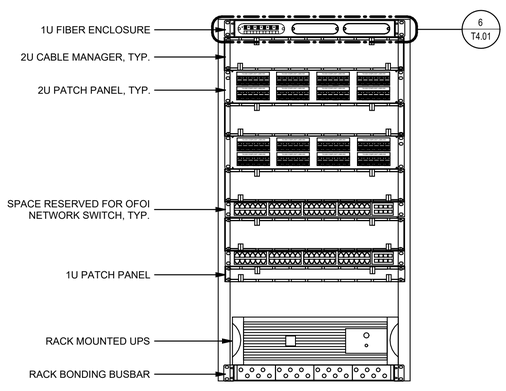

5 IT CLOSET 104 - RACKED EQUIPMENT ELEVATION VIEW

1 1/2" = 1'-0"

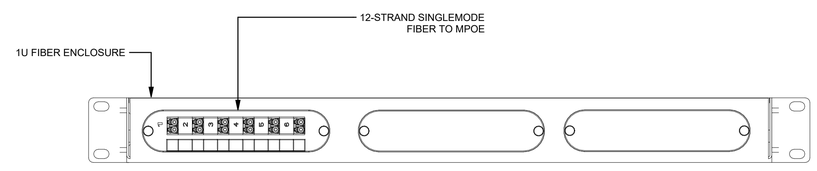

6 IT CLOSET 104 - FIBER ENCLOSURE TERMINATION DETAIL

0' 4' 8' 16'
6" = 1'-0"

GENERAL SHEET NOTES

A. TECHNOLOGY EQUIPMENT LOCATIONS, RACKED EQUIPMENT ELEVATIONS, AND PATHWAY COMPONENTS ARE DIAGRAMMATIC.

B. COORDINATE FINAL RACKED EQUIPMENT ELEVATIONS WITH OWNER.

C. BOND ALL METALLIC PATHWAY COMPONENTS AND TECHNOLOGY EQUIPMENT TO BONDING BUSBAR WITHIN ROOM.

D. ELECTRICAL RECEPTACLES ARE SHOWN FOR REFERENCE ONLY. REFER TO POWER PLANS FOR SPECIFIC REQUIREMENTS.

E. PROVIDE CABLE RUNWAY SUPPORT BRACKETS EVERY 5-FEET, MINIMUM.

F. PROVIDE RACK MOUNTED UPS WITHIN WALL MOUNTED TELECOMMUNICATIONS CABINET. BASIS OF DESIGN: APC SMTL1500RM3UC.

G. MPOE IS LOCATED WITHIN CHERRY HILL SOBERING CENTER. REFER TO T1.01 AND T5.01 FOR ADDITIONAL INFORMATION.

SHEET KEYNOTES

1. MIN. 24U X 24" DEEP WALL MOUNTED TELECOMMUNICATIONS CABINET.
2. 3/4" FIRE-TREATED PLYWOOD BACKBOARD.
3. (2) 2" CONDUITS FROM OUTSIDE PLANT VAULT.
4. PRIMARY BONDING BUSBAR.
5. 12" FLEXIBLE CABLE RUNWAY.
6. METAL DISTRIBUTION RING.
7. SECURITY PANELS. REQUIRES 115VAC FED FROM A DEDICATED CIRCUIT.
8. RECLOSEABLE FIBER STORAGE RING.
9. (3) 2" CONDUITS FROM IT CLOSET 104 TO PULL BOX (PB-01) IN ELECTRICAL ROOM ON FLOOR ABOVE.
10. QUAD 5-20R, FED FROM A DEDICATED CIRCUIT.

CLIENT

ALAMEDA COUNTY

INTERFACE ENGINEERING
PROJECT 2025-1084
CONTACT Kris Howard, RCDD
1999 Harrison Street, Suite 550
Oakland, CA 94612
TEL 415.489.7240
www.interfaceengineering.com

NOTE: If this drawing is not 22"x34" it has been revised from its original size and the scales noted on drawing/details are no longer applicable.

© 2022 Shah Kawasaki Architects

Revision Number	DATE	ISSUE DESCRIPTION
	09/03/2026	PERMIT SET

Project

WHITECOTTON COTTAGE REHABILITATION

15400 FOOTHILL BLVD
SAN LEANDRO, CA 94578

Architect of Record

P&T

Consultant

PAGE & TURNBULL
170 MAIDEN LANE, 5TH FLOOR
SAN FRANCISCO, CA

REGISTERED PROFESSIONAL ENGINEER
JASON LAU
No. E16806
Exp: 09/30/28
ELECTRICAL
STATE OF CALIFORNIA

Drawing Title

ENLARGED PLANS AND SECTIONS - TECHNOLOGY

Drawing No.

T4.01

SKA Project Number: 25001

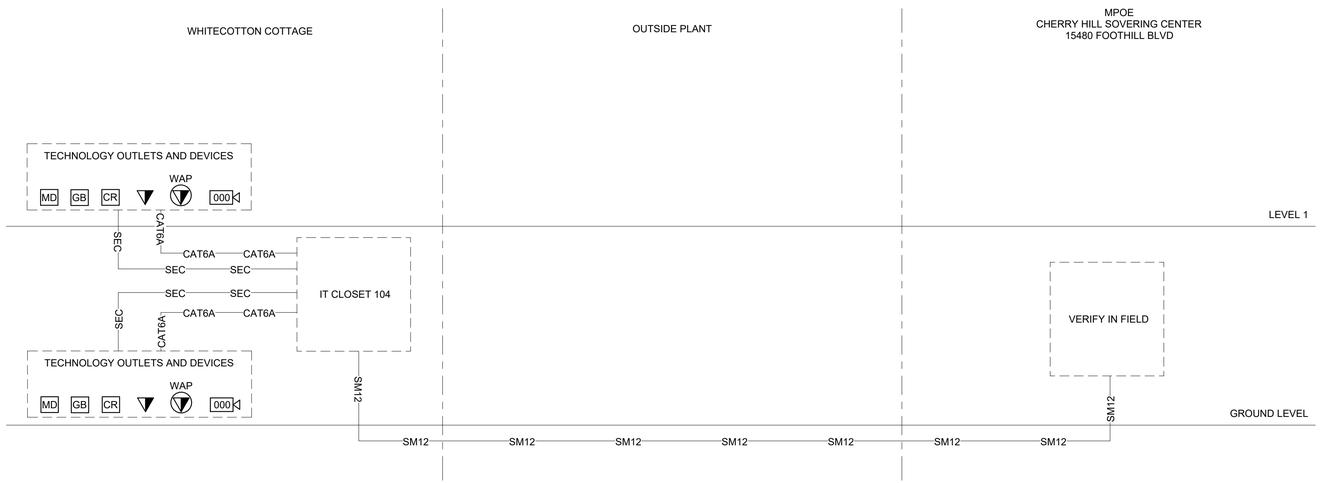

1 TECHNOLOGY SYSTEMS CABLING RISER DIAGRAM

NO SCALE

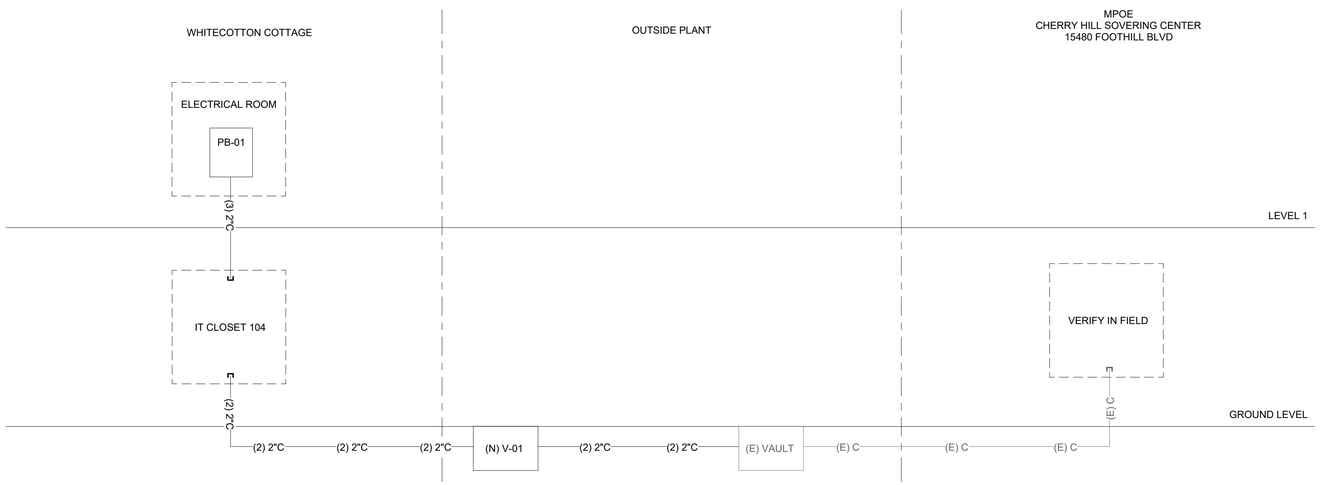

2 TECHNOLOGY SYSTEMS PATHWAYS RISER DIAGRAM

NO SCALE

GENERAL SHEET NOTES

A. TECHNOLOGY CABLING PATHWAYS ARE SHOWN DIAGRAMMATICALLY.

B. TECHNOLOGY OUTLETS AND DEVICES ARE SHOWN FOR REFERENCE ONLY.

C. TERMINATE FIBER OPTIC BACKBONE USING LC/UPC CONNECTORS.

D. EXISTING TELECOMMUNICATIONS OUTSIDE PLANT PATHWAY COMPONENTS AND ROUTING ARE BASED ON AVAILABLE AS-BUILT DOCUMENTATION AND LIMITED FIELD OBSERVATION. VERIFY IN FIELD PRIOR TO BID.

CLIENT

ALAMEDA COUNTY

INTERFACE ENGINEERING
PROJECT 2025-1084
CONTACT Kris Howard, RCDD
1999 Harrison Street, Suite 550
Oakland, CA 94612
TEL 415.489.7240
www.interfaceengineering.com

NOTE: If this drawing is not 22"x34" it has been revised from its original size and the scales noted on drawing/details are no longer applicable.

© 2022 Shah Kawasaki Architects

Revision Number	DATE	ISSUE DESCRIPTION
	09/03/2026	PERMIT SET

Project

WHITECOTTON COTTAGE REHABILITATION

15400 FOOTHILL BLVD
SAN LEANDRO, CA 94578

Architect of Record

P&T

Consultant

PAGE & TURNBULL
170 MAIDEN LANE, 5TH FLOOR
SAN FRANCISCO, CA

REGISTERED PROFESSIONAL ENGINEER
JASON LAU
No. E16806
Exp: 09/30/28
ELECTRICAL
STATE OF CALIFORNIA

Drawing Title

RISER DIAGRAMS - TECHNOLOGY

Drawing No.

T5.01

SKA Project Number: 25001

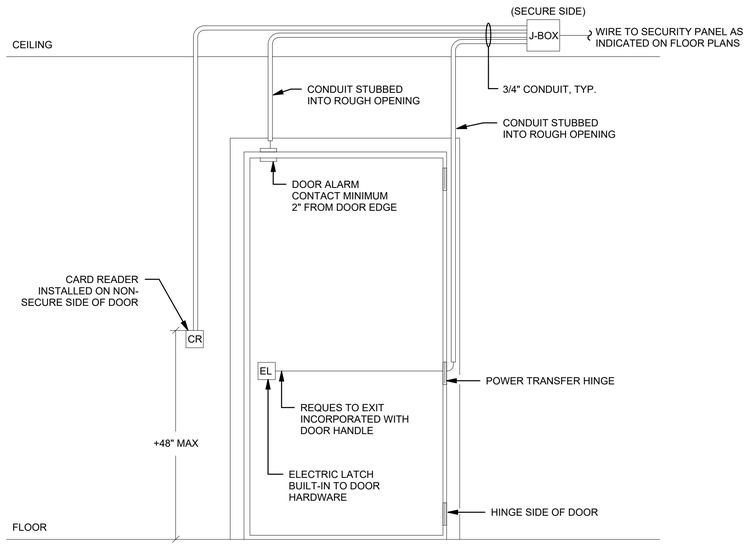

1 SINGLE DOOR CARD READER DETAIL

NO SCALE

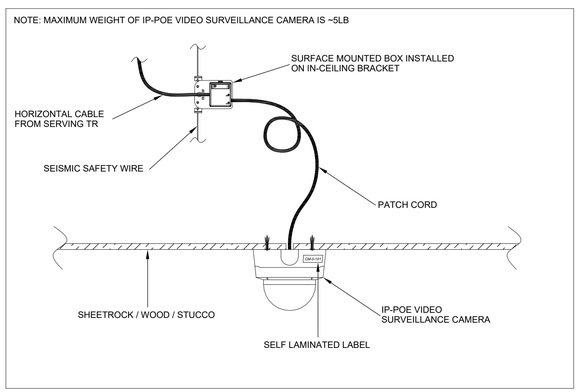

2 CEILING MOUNTED SECURITY CAMERA DETAIL

NO SCALE

DETAIL NOTES:

A. FURNITURE FACEPLATE AND RACEWAY ARE SHOWN DIAGRAMMATICALLY. COORDINATE RACEWAY CONFIGURATION AND FINAL FACEPLATE TYPE, SIZE, AND MOUNTING WITH FURNITURE SYSTEM.

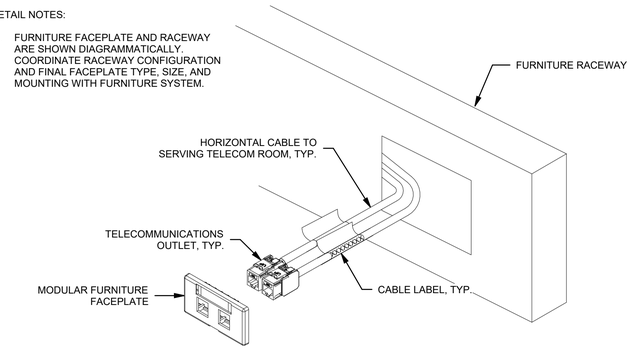

3 TWO-PORT MODULAR FURNITURE OUTLET DETAIL

NO SCALE

DETAIL NOTES:

A. PROTECT CABLING WITH SPLIT LOOM TUBING AT ALL EXPOSED TRANSITIONS THROUGH BOXES AND PLATES.

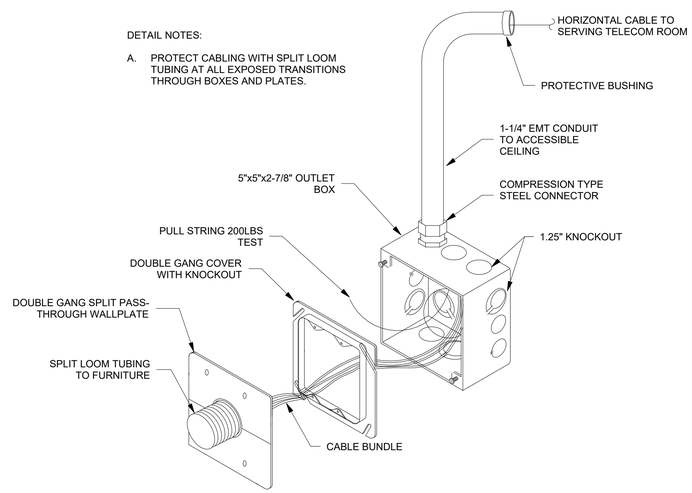

4 DATA OUTLET FURNITURE FEED DETAIL

NO SCALE

CLIENT

ALAMEDA COUNTY

INTERFACE ENGINEERING

PROJECT 2025-1084
CONTACT Kris Howard, RCDD

1999 Harrison Street, Suite 550
Oakland, CA 94612
TEL 415.489.7240
www.interfaceengineering.com

NOTE: If this drawing is not 22"x34" it has been revised from its original size and the scales noted on drawing/details are no longer applicable.

© 2022 Shah Kawasaki Architects

Revision Number	DATE	ISSUE DESCRIPTION
	09/03/2026	PERMIT SET

Project

WHITECOTTON COTTAGE REHABILITATION

15400 FOOTHILL BLVD
SAN LEANDRO, CA 94578

Architect of Record

P&T

Consultant

PAGE & TURNBULL
170 MAIDEN LANE, 5TH FLOOR
SAN FRANCISCO, CA

REGISTERED PROFESSIONAL ENGINEER
JASON LAU
No. E16806
Exp: 09/30/28
ELECTRICAL
STATE OF CALIFORNIA

Drawing Title

DETAILS - TECHNOLOGY

Drawing No.

T6.01

SKA Project Number: 25001

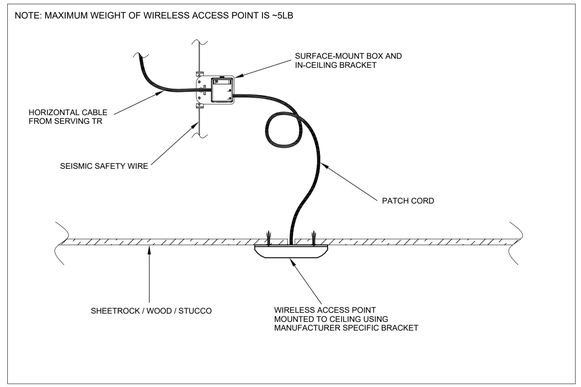

1 CEILING MOUNTED WIRELESS ACCESS POINT DETAIL

NO SCALE

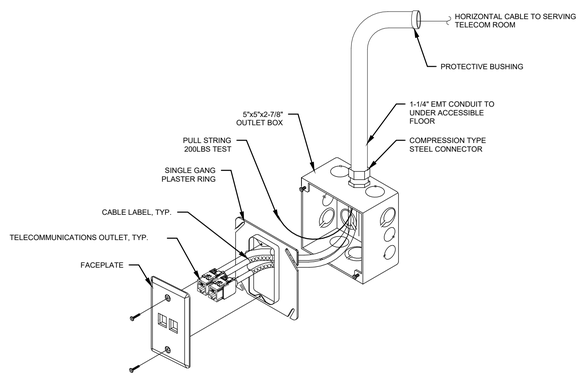

2 TWO PORT DATA OUTLET DETAIL

NO SCALE

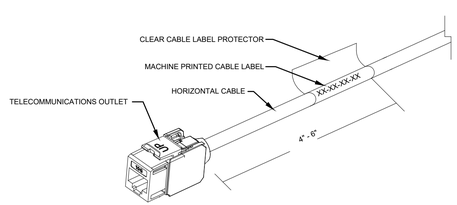

3 STATION CABLE LABELING DETAIL

NO SCALE

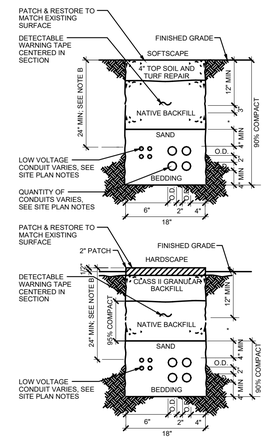

NOTES:

A. ALL TRENCHES MUST CONFORM TO O.S.H.A. REQUIREMENTS.

B. COORDINATE WITH LOCAL UTILITY COMPANIES, STATE, AND CITY & COUNTY REQUIREMENTS FOR MINIMUM REQUIRED TRENCHING DEPTHS FOR UTILITY CONDUITS AND CONDUITS IN EASEMENTS.

C. FOLLOW UTILITY COMPANY MINIMUM SEPARATION REQUIREMENTS WHEN CROSSING OR RUNNING HORIZONTALLY TO UTILITY COMPANY CONDUITS.

D. USE PLASTIC DUCT SPACERS TO MAINTAIN SPACE BETWEEN MULTIPLE CONDUITS.

E. PROVIDE 3" MINIMUM CONCRETE ENVELOPE WHERE CONCRETE ENCASEMENT IS INDICATED, 2500 PSI COMPRESSIVE STRENGTH AT 28 DAYS, DYED RED.

F. REDUCE REQUIRED MINIMUM SEPARATION DISTANCE BETWEEN SECONDARY POWER CONDUIT AND LOW VOLTAGE SYSTEMS CONDUIT (TEL/TV/LV) TO 3" WHEN CONDUITS ARE ENCASED IN 3" CONCRETE ENVELOPE.

G. PROVIDE 12" SEPARATION DISTANCE WHEN CROSSING "WET" UTILITIES. IF SEPARATION CANNOT BE CONTAINED, ENCASE ELECTRICAL SYSTEMS CONDUIT IN CONCRETE.

H. CRUSHED GRAVEL MATERIAL REQUIRES 95% COMPACTION MINIMUM.

I. * DENOTES OPTIONAL AREA - CAN BE FILLED WITH EITHER CRUSHED GRAVEL OR SAND BEDDING MATERIAL.

J. TRENCHES PARALLEL TO FOUNDATIONS SHALL BE MADE IN ACCORDANCE WITH STRUCTURAL REQUIREMENTS.

MINIMUM CLEARANCE REQUIREMENTS (INCHES)

	PC	SC	G	TEL	TV	LV	W
PRIMARY CONDUIT (601V-22KV) (PC)	-	6	36	36	36	36	36
SECONDARY POWER CONDUIT (0-600V) (SC)	6	2	12	12	12	12	36
GAS (G)	36	12	-	12	12	12	36
TELEPHONE (TEL)	36	12	12	2	2	2	36
CATV (TV)	36	12	12	2	2	2	36
OTHER LOW VOLTAGE (LV)	36	12	12	2	2	2	36
WET UTILITES (W)	36	36	36	36	36	36	-

TABLE ONLY APPLIES TO CONDUITS AFTER THE UTILITY POINT OF CONNECTION.

4 DUCTBANK DETAIL

NO SCALE

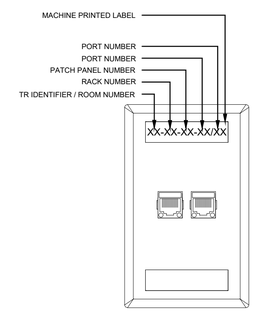

DETAIL NOTES

A. LABEL SHALL BE MACHINE PRINTED WITH BLACK TEXT ON A SOLID WHITE BACKGROUND.

B. TEXT SHALL BE SIZED APPROPRIATELY FOR LEGIBILITY.

C. REFER TO DIVISION 27 SPECIFICATIONS FOR ADDITIONAL REQUIREMENTS.

5 TWO PORT FACEPLATE DETAIL

NO SCALE

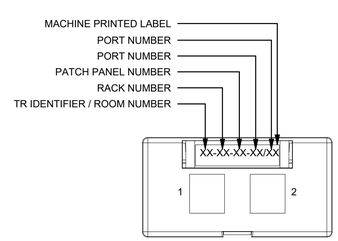

DETAIL NOTES:

A. LABEL SHALL BE MACHINE PRINTED WITH BLACK TEXT ON A SOLID WHITE BACKGROUND.

B. TEXT SHALL BE SIZED APPROPRIATELY FOR LEGIBILITY.

C. REFER TO DIVISION 27 SPECIFICATIONS FOR ADDITIONAL REQUIREMENTS.

D. FACEPLATE SHOWN IS DIAGRAMMATIC. COORDINATE FINAL FACEPLATE TYPE, SIZE, AND MOUNTING WITH FURNITURE SYSTEM.

6 TWO-PORT MODULAR FURNITURE FACEPLATE DETAIL

NO SCALE

CLIENT

GENERAL SERVICES AGENCY COUNTY OF ALAMEDA GSA

ALAMEDA COUNTY

INTERFACE ENGINEERING

PROJECT 2025-1084
CONTACT Kris Howard, RCDD

1999 Harrison Street, Suite 550
Oakland, CA 94612
TEL 415.489.7240
www.interfaceengineering.com

NOTE: If this drawing is not 22"x34" it has been revised from its original size and the scales noted on drawing/details are no longer applicable.

© 2022 Shah Kawasaki Architects

Revision Number	DATE	ISSUE DESCRIPTION
	09/03/2026	PERMIT SET

Project

WHITECOTTON COTTAGE REHABILITATION

15400 FOOTHILL BLVD
SAN LEANDRO, CA 94578

Architect of Record

P&T

Consultant

PAGE & TURNBULL
170 MAIDEN LANE, 5TH FLOOR
SAN FRANCISCO, CA

REGISTERED PROFESSIONAL ENGINEER
JASON LAU
No. E16806
Exp: 09/30/28
ELECTRICAL
STATE OF CALIFORNIA

Drawing Title

DETAILS - TECHNOLOGY

Drawing No.

T6.02

SKA Project Number: 25001

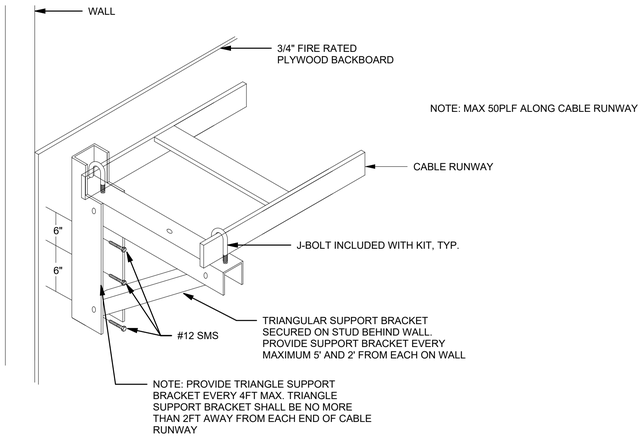

1 CABLE RUNWAY TRIANGULAR SUPPORT DETAIL

NO SCALE

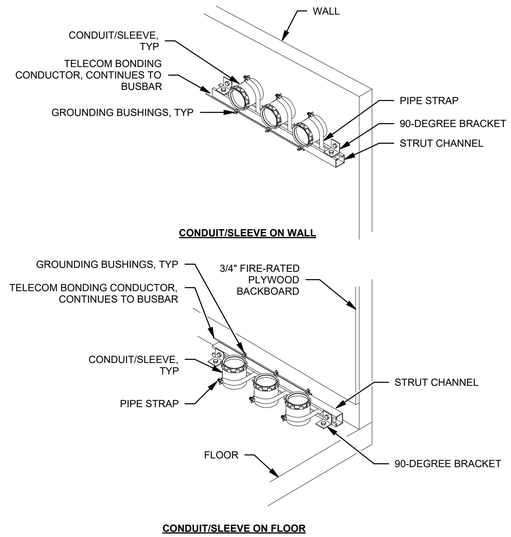

3 CONDUITS/SLEEVES BONDING DETAIL

NO SCALE

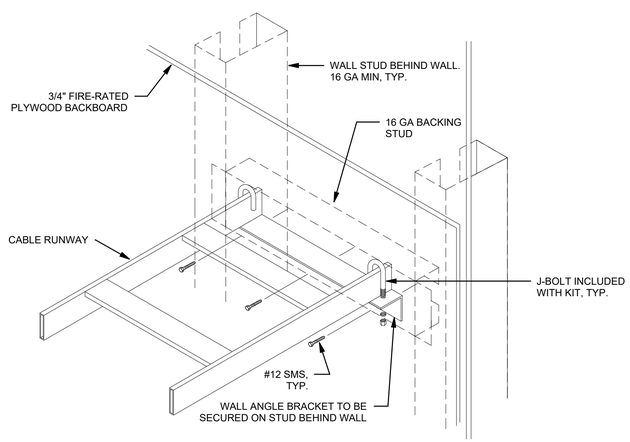

2 CABLE RUNWAY WALL ANGLE BRACKET DETAIL

NO SCALE

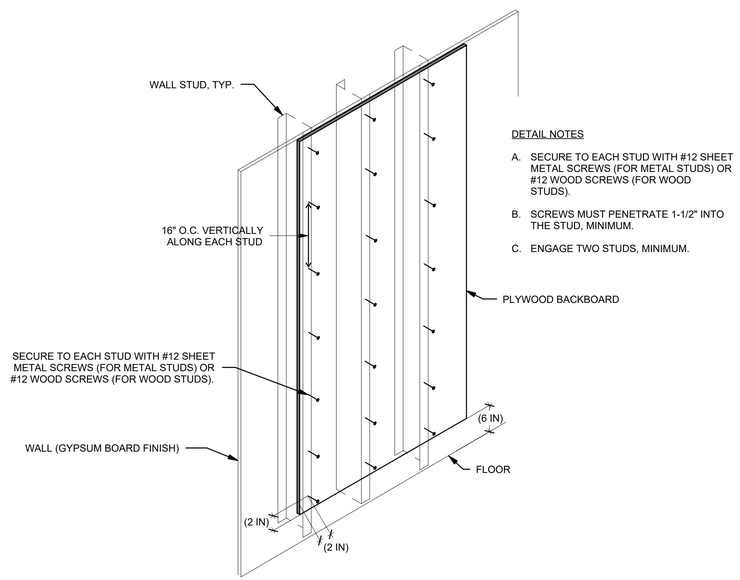

DETAIL NOTES

A. SECURE TO EACH STUD WITH #12 SHEET METAL SCREWS (FOR METAL STUDS) OR #12 WOOD SCREWS (FOR WOOD STUDS).

B. SCREWS MUST PENETRATE 1-1/2" INTO THE STUD, MINIMUM.

C. ENGAGE TWO STUDS, MINIMUM.

4 PLYWOOD BACKBOARD INSTALLATION DETAIL

NO SCALE

CLIENT

GENERAL SERVICES AGENCY COUNTY OF ALAMEDA GSA

ALAMEDA COUNTY

INTERFACE ENGINEERING

PROJECT 2025-1084
CONTACT Kris Howard, RCDD

1999 Harrison Street, Suite 550
Oakland, CA 94612
TEL 415.489.7240
www.interfaceengineering.com

NOTE: If this drawing is not 22"x34" it has been revised from its original size and the scales noted on drawing/details are no longer applicable.

© 2022 Shah Kawasaki Architects

Revision Number	DATE	ISSUE DESCRIPTION
	09/03/2026	PERMIT SET

Project

WHITECOTTON COTTAGE REHABILITATION

15400 FOOTHILL BLVD
SAN LEANDRO, CA 94578

Architect of Record

P&T

Consultant

PAGE & TURNBULL
170 MAIDEN LANE, 5TH FLOOR
SAN FRANCISCO, CA

REGISTERED PROFESSIONAL ENGINEER
JASON LAU
No. E16806
Exp: 09/30/28
ELECTRICAL
STATE OF CALIFORNIA

Drawing Title

DETAILS - TECHNOLOGY

Drawing No.

T6.03

SKA Project Number: 25001