Project Documentation

Diagnostic Rev. 586220 Harness - User Port

Project number: 113

Revision: 3

Date: 04.03.2022

Diagnostic Rev. 586220 Harness - User Port Rev. 3

Module Description

Introduction

The User Port module is the central part of the Diagnostic Rev. 586220 harness. It provides the required feedback connections for testing the C64's CIA U2, which is connected to the user port. It also holds the analog switches, which are required to test the Control Ports and the feedback connections for testing the cassette port.

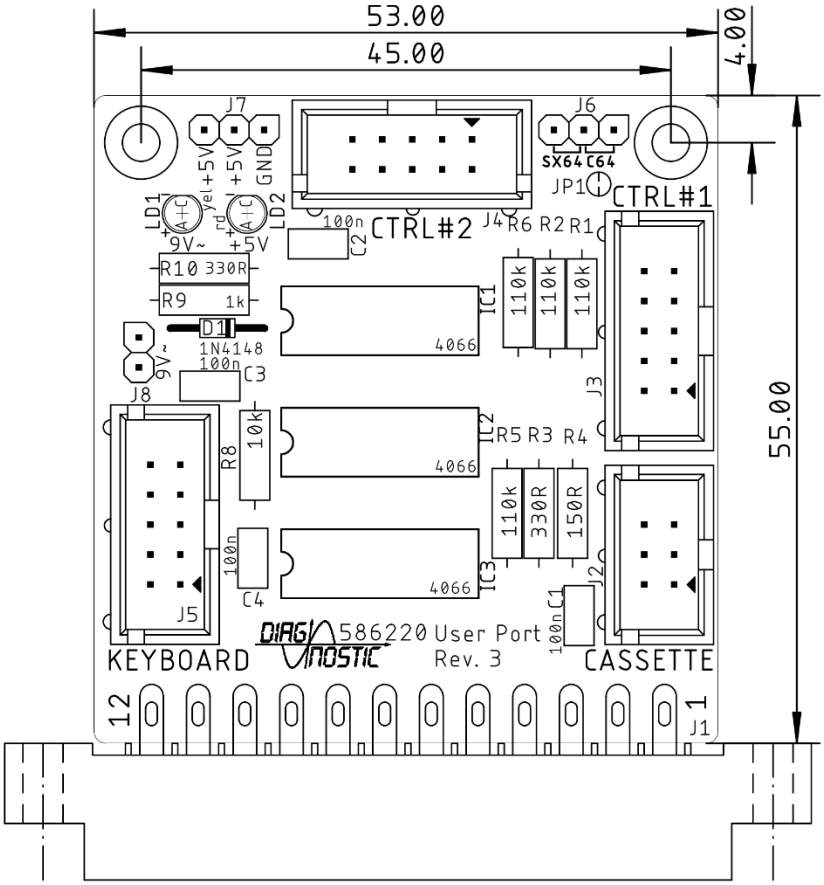

Figure 1: User Port PCB Rev. 3

The MOTOR output signal of the cassette port has approximately a 6V level. To use it as a control signal for operating logic devices, a voltage divider consisting out of a 150Ω resistor and a 330Ω resistor is required, which has a ratio of about 0.7.

This way, the MOTOR signal is fed back to the WRITE pin and is also used for switching the analog switches between the joystick signals of both control ports.

Figure 2: User Port Dongle Rev. 3, without and with a panel voltmeter

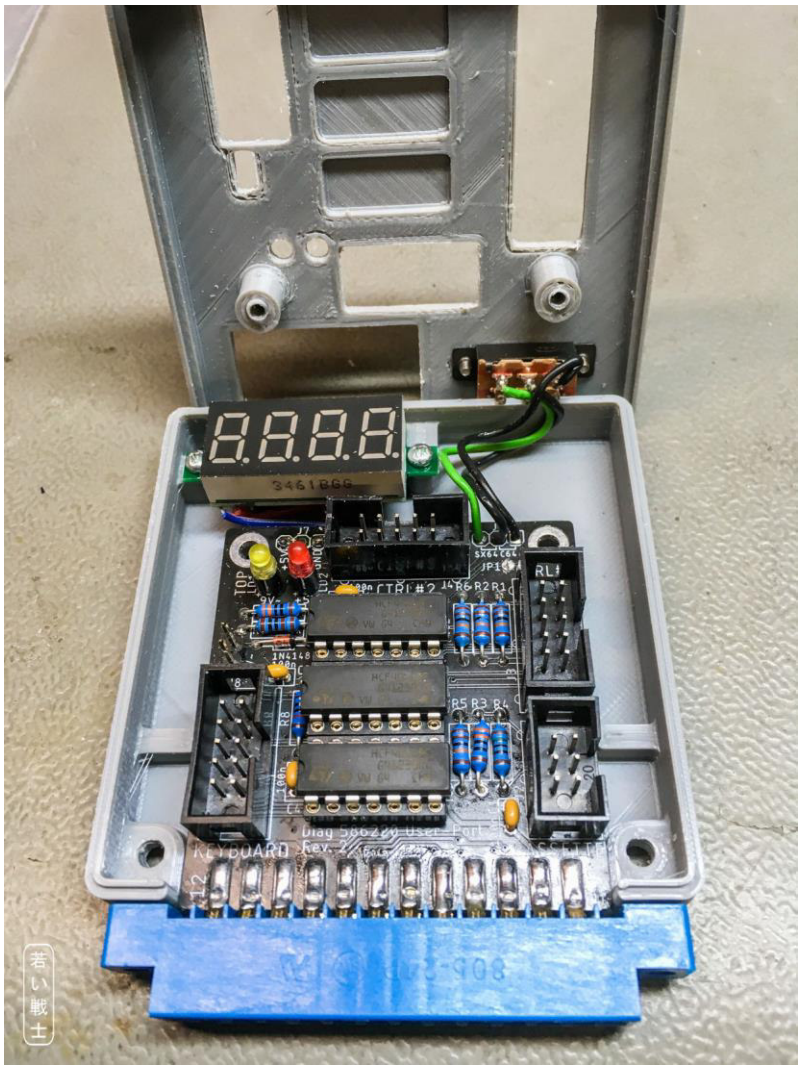

Figure 3: Installation of the panel voltmeter and the switch for SX/64 and C64 mode.

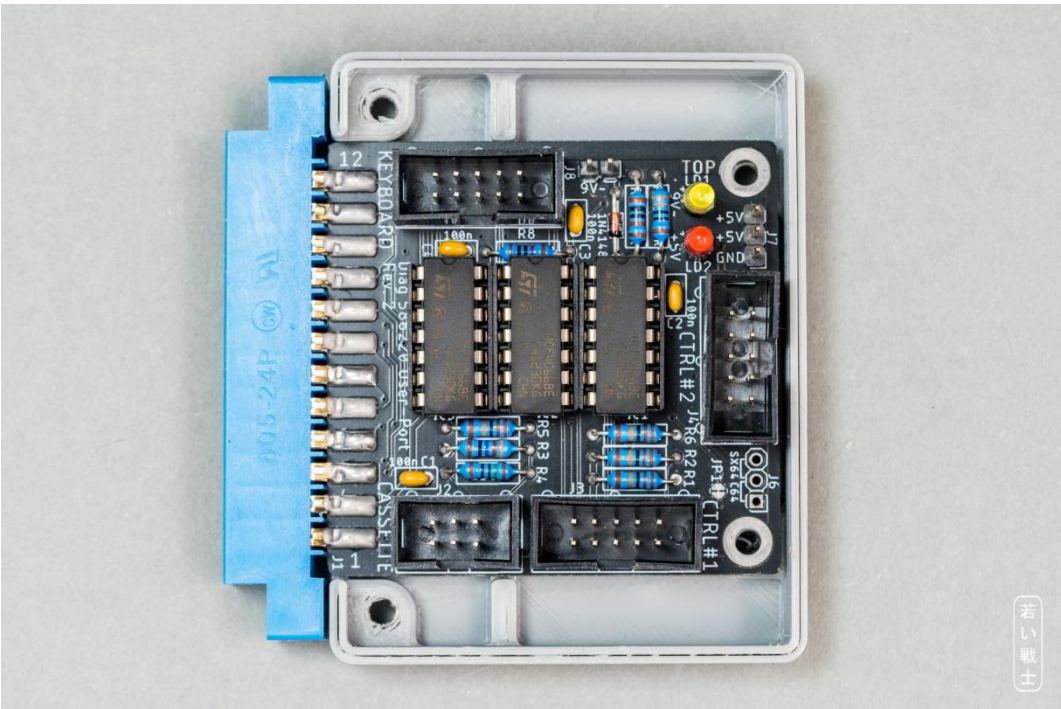

Figure 4: Installation without the panel voltmeter, but the pin headers for voltage measurement.

Rev. 1

New on Rev. 1 are the analog switches for the keyboard feedbacks. This feature requires a ribbon cable to the keyboard PCB (Rev. 1). It does not connect to the Keyboard PCB Rev. 0.

The reason for this modification:

The feedbacks on keyboard dongle are identical to the feedback provided by the analog switches for the control port feedback. Since the feedbacks on the keyboard dongle are permanent, the analog switches are not effective and the control ports are not fully tested. This can lead to a false "OK".

The new version can open the keyboard feedbacks with additional analog switches, so it is not required to remove the keyboard dongle for proper testing anymore.

The SX-64 test feature (Rev. 2 and later)

The SX-64 does not provide a cassette port. Since the control port (and keyboard) feedbacks are switched by the cassette port MOTOR signal, J6 provides a manual switching option. It can either be jumpered or a toggle switch can be connected. Connecting J6 **pin 1 and pin 2** configures the regular **C64** setup (the feedbacks are controlled by MOTOR), connecting **pin 3 and pin 2** configured the control port feedbacks being switched on permanently for the **SX-64** option. For switching between options, the cut pad **JP1 has to be opened**.

By default, the C64 only mode is selected, which meansJP1 is closed. **Do not connect a switch to J6 without opening JP1.**

The keyboard testing of the SX-64 requires the C128 keyboard PCB and a DB female-female gender changer. For complete SX-64 testing, the diagnostic software has to be run in C64 mode (control port feedbacks off, keyboard feedbacks on) at least one pass and then in SX-64 mode (control port feedbacks on, keyboard feedbacks off).

Rev. 3: Voltage indicators and voltmeter

The purpose of the voltmeter is measuring the +5VDC inside the C64, which does make sense. A too low voltage here might indicate a bad power switch or a bad/oxidized power jack.

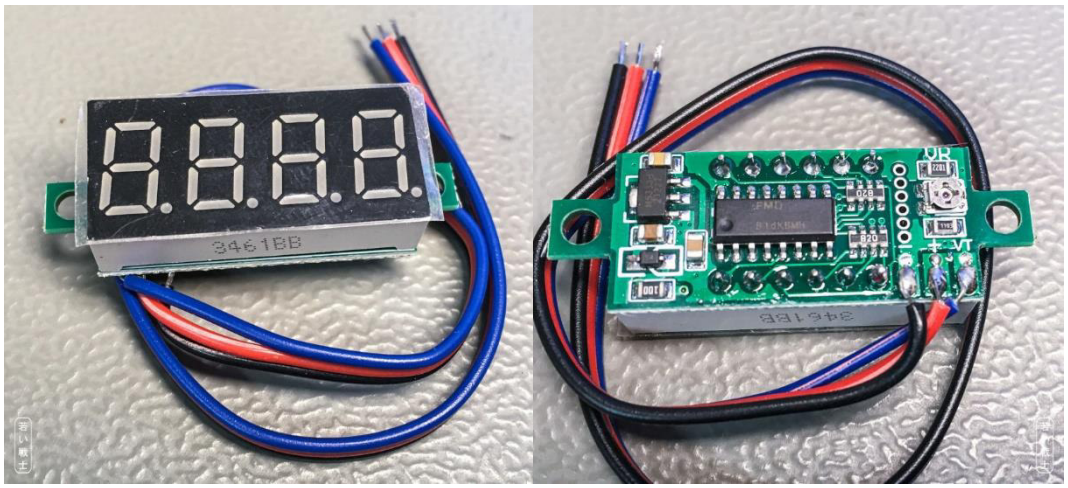

Figure 5: Front and back of the 0.36" 4-digit voltmeter

Previously, three-digit and four-digit models have been tested. The three-digit models are not suitable, since they showed an error of almost 100mV. The **four-digit models** can be adjusted on a little potentiometer. **Adjustment is required** and should be performed before the assembled PCB is installed in the case.

The adjustment is best performed by measuring the voltage between the GND pin and one of the +5V pins of J7, then adjusting the reading of the voltmeter at the potentiometer on the back side. This potentiometer is shown in Figure 5: Front and back of the 0.36" 4-digit voltmeter.

Note: The panel voltmeters, that I have bought for this project were sufficiently accurate, but I would not grant for all 4 digit "precision panel meters, so the recommended configuration is to install a pin header and perform the measurement with a multimeter.

Pinouts

User Port

J1- Edge Connector (2x12, 3.96mm pitch)

Pin	Signal	Pin	Signal
1	GND	A	GND
2	+5V	B	/FLAG2
3	/RESET	C	PB0
4	CNT1	D	PB1
5	SP1	E	PB2
6	CNT2	F	PB3
7	SP2	H	PB4
8	/PC2	J	PB5
9	ATN	K	PB6
10	9VAC(1)	L	PB7
11	9VAC(2)	M	PA2
12	GND	N	GND

Cassette Port

J2 – 2x3 pin header for a ribbon cable connected to the cassette port PCB (project number 114).

Pin	Signal	Pin	Signal
1	GND	2	n.c.
3	MOTOR	4	READ
5	WRITE	6	SENSE

Control Port #1

J3 – 2x5 pin header for a ribbon cable which connects via a D-SUB 9 (female) to the control port.

Pin	*D-SUB*	Signal	Pin	*D-SUB*	Signal
1	1	JOYA0 (up)	2	6	FIREA
3	2	JOYA1 (down)	4	7	+5VCTR1
5	3	JOYA2 (left)	6	8	n.c. (GND)
7	4	JOYA3 (right)	8	9	POTXA
9	5	POTYA	10	-	n.c.

Control Port #2

J4 – 2x5 pin header for a ribbon cable which connects via a D-SUB 9 (female) to the control port.

Pin	*D-SUB*	Signal	Pin	*D-SUB*	Signal
1	1	JOYB0 (up)	2	6	FIREB
3	2	JOYB1 (down)	4	7	+5VCTR2
5	3	JOYB2 (left)	6	8	n.c. (GND)
7	4	JOYB3 (right)	8	9	POTXB
9	5	POTYB	10	-	n.c.

Keyboard

J5 – 2x5 pin header for a ribbon cable which connects to the keyboard PCB.

Pin	Signal	Pin	Signal
1	*Keyboard PB0*	2	*Keyboard PA0*
3	*Keyboard PB4*	4	*Keyboard PA4*
5	*Keyboard PB3*	6	*Keyboard PA3*
7	*Keyboard PB2*	8	*Keyboard PA2*
9	*Keyboard PB1*	10	*Keyboard PA1*

SX-64 Option

J6 – 1x3 pin header (pitch 2.54mm)

Pin	Signal
1	WRITE
2	WRITE*
3	+5V

To use J 6 for switching between SX-64 and C64, cut open JP1. This is the cut pad right beside J6.

Connection pin 1-2 selects the C64 option, connecting pin 2-3 selects the SX-64 option, which switches on the control port feedbacks.

Panelmeter Connector

J7 – 1x3 pin header, 2.54mm pitch

Pin	Signal
1	GND
2	+5V
3	+5V

9VAC Connector

J8 - 1x2 pin header, 2.54mm pitch

Pin	Signal
1	9VAC1
2	9VAC2

Interconnects

User Port

Pin	Signal		Signal	Pin
4	CNT1	↔	CNT2	6
5	SP1	↔	SP2	7
8	/PC2	↔	/FLAG2	B
9	ATN	↔	PA2	M
C	PB0	↔	PB4	H
D	PB1	↔	PB5	J
E	PB2	↔	PB6	K
F	PB3	↔	PB7	L

Cassette Port

Pin	Signal		Signal	Pin
1	GND		n/c	2
3	MOTOR	Volt.div.	WRITE	5
4	READ	↔	SENSE	6

Control Ports

Signal		Signal
FIREA	switched by MOTOR	FIREB
JOYA0	switched by MOTOR	JOYB0
JOYA1	switched by MOTOR	JOYB1
JOYA2	switched by MOTOR	JOYB2
JOYA3	switched by MOTOR	JOYB3
POTXA	via 110kΩ (R1)	+5V (CTR 1)
POTYA	via 110kΩ (R2)	+5V (CTR 1)
POTXB	via 110kΩ (R5)	+5V (CTR 2)
POTYB	via 110kΩ (R6)	+5V (CTR 2)

The digital signals of the control ports are connected by an analog switch. A HIGH level of the MOTOR signal will switch on.

The POT (paddle) signals are tested with a fix resistor of 110k, that is connected to the +5V provided by the respective control port.

Cables

User Port/Cassette Port Cable

One cable as shown in Doc.-No. 113-3-01-01 is required. It connects to J2. This cable needs to be longer for C128

User Port/Control Cables

Two cables as shown in Doc.-Nr. 113-3-02-01 are required. They connect to J3 and J4.

User Port/Keyboard PCB Cable

One cable as shown in Doc.-No. 113-3-04-01 is required. It connects to J5 and the keyboard PCB (C64 or C128). For the C128 this cable has to be longer.

The IEC-Dongle

The IEC-Dongle is not attached to the PCB, it is an extra built.

6p. DIN plug, connect according to Doc.-No. 113-3-03-01

Pin	Signal		Signal	Pin
1	SRQ	↔	DATA	5
3	ATN	↔	CLK	4

Block diagram of the Diagnostic Harness Rev. 3

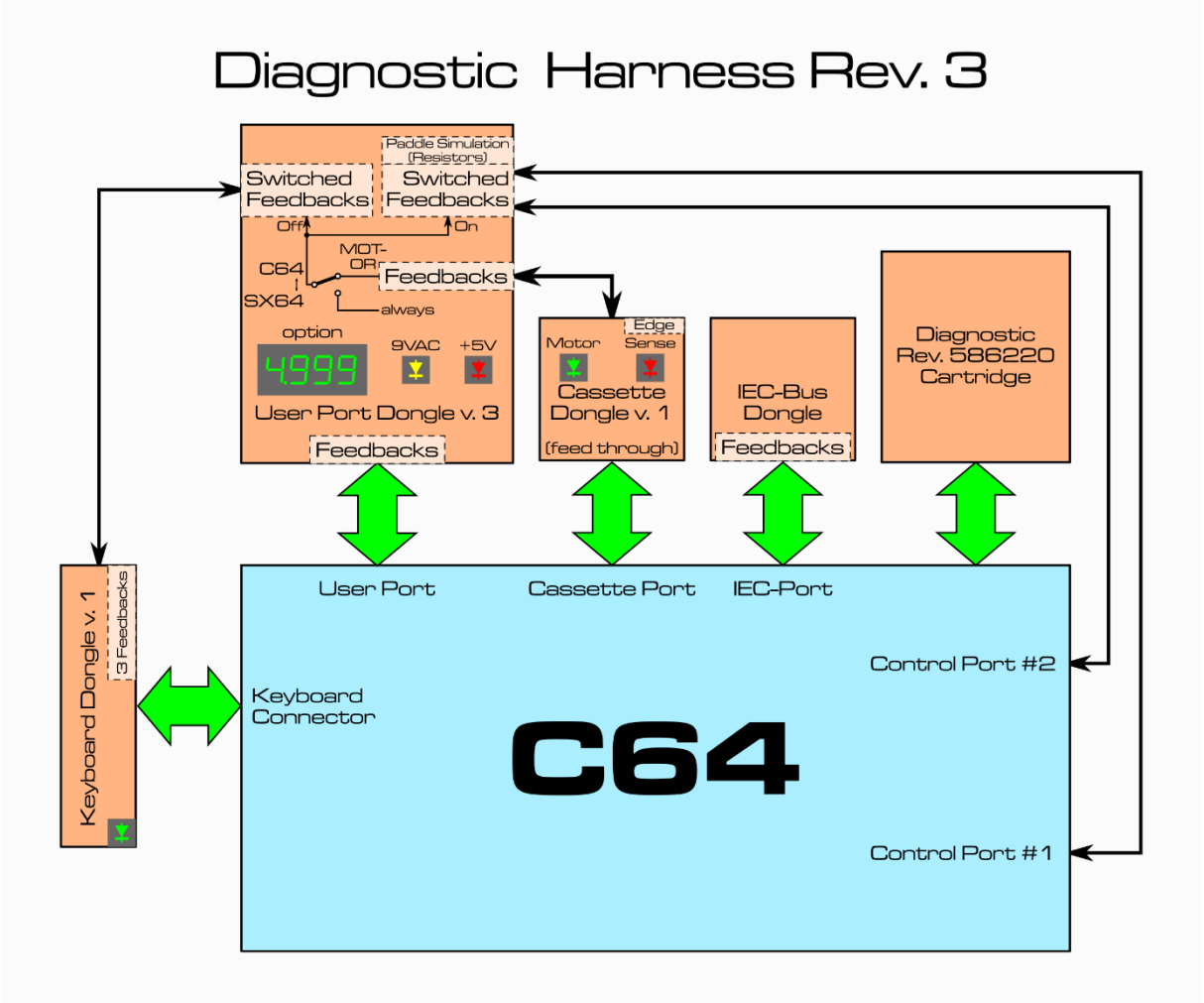

Revision History

BOM v0.1 → v0.2

- Pos. 6: value 120k →110k
- Pos. 8: value 320R →316R

Rev. 0 → Rev. 1

- This is a PCB revision
- Analog switches added (IC3)
- Pin header added (J5)
- New Ribbon Cable
- 3D printed case (Rev. 1) is required

Rev. 1 → Rev. 2

- This is a PCB revision
- Pin header J6 and cup pad JP1 added
- It can either be installed in the Rev. 1 3D printed case, if no switch option SX64 is desired or in the User Port Case SX-64, which provides mounting holes for a toggle switch (19mm hole distance, standard switch).

Rev. 2 → Rev. 3

- LEDs added for presence indication of +5V and 9VAC
- Connector for panel meter
- Connector for 9VAC
- New 3D printed cases.

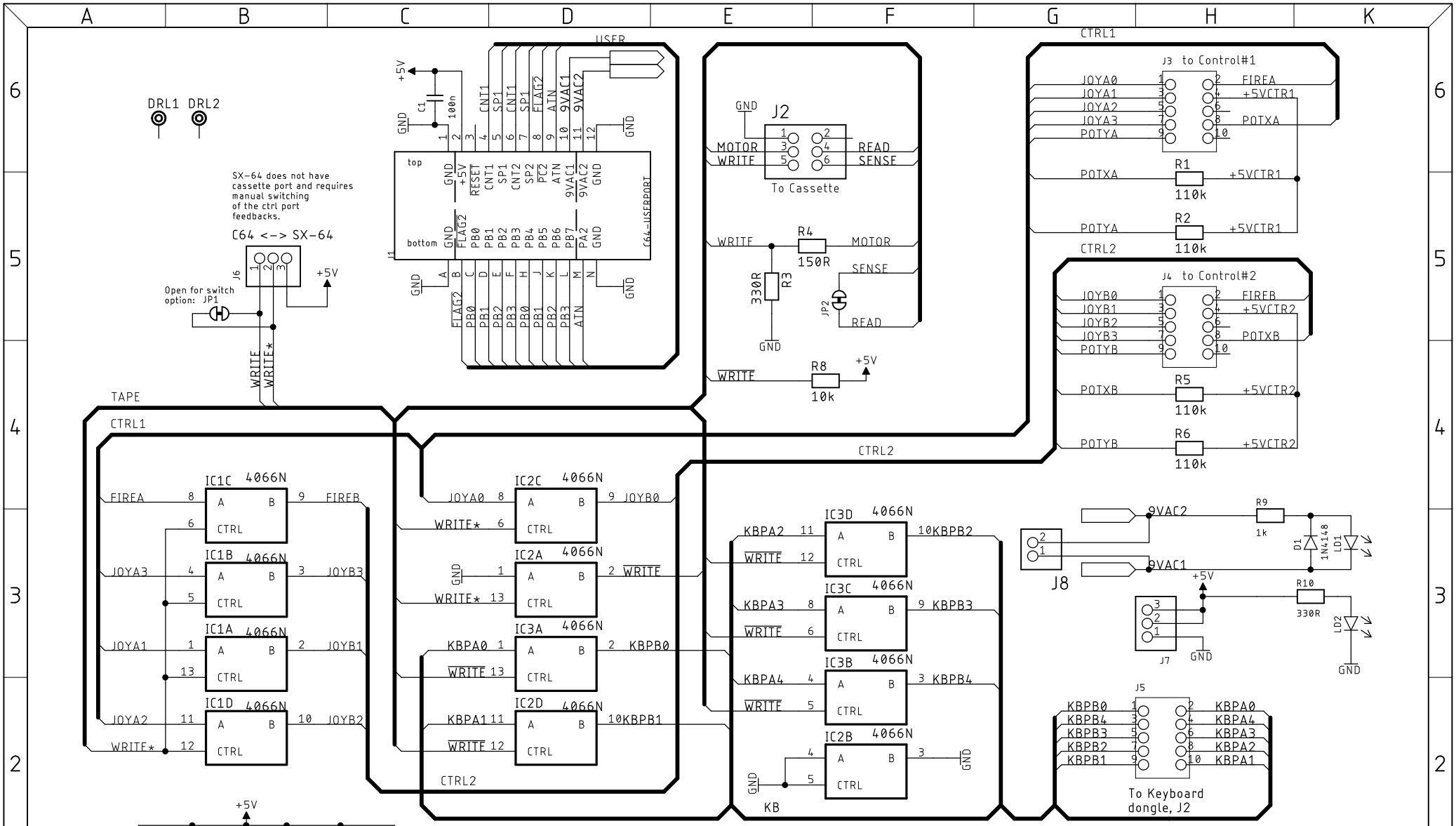

Title:	Diag 586220 C64-Userport-Harness	Doc.-No.:	113-1-01-03
		Draft.:	Sven Petersen
Date:	12.12.2022 14:00	Rev.: 3	Page 1/1
File:	C64_Userport_Test		
	http://github.com/svenpetersen1965		A4

Sven Peterssen 2022	Doc.-No.: 113-2-01-03	
	Cu: 35µm	Cu-Layers: 2
C64_Userport_Test		
12.12.2022 14:05		Rev.: 3
placement component side		

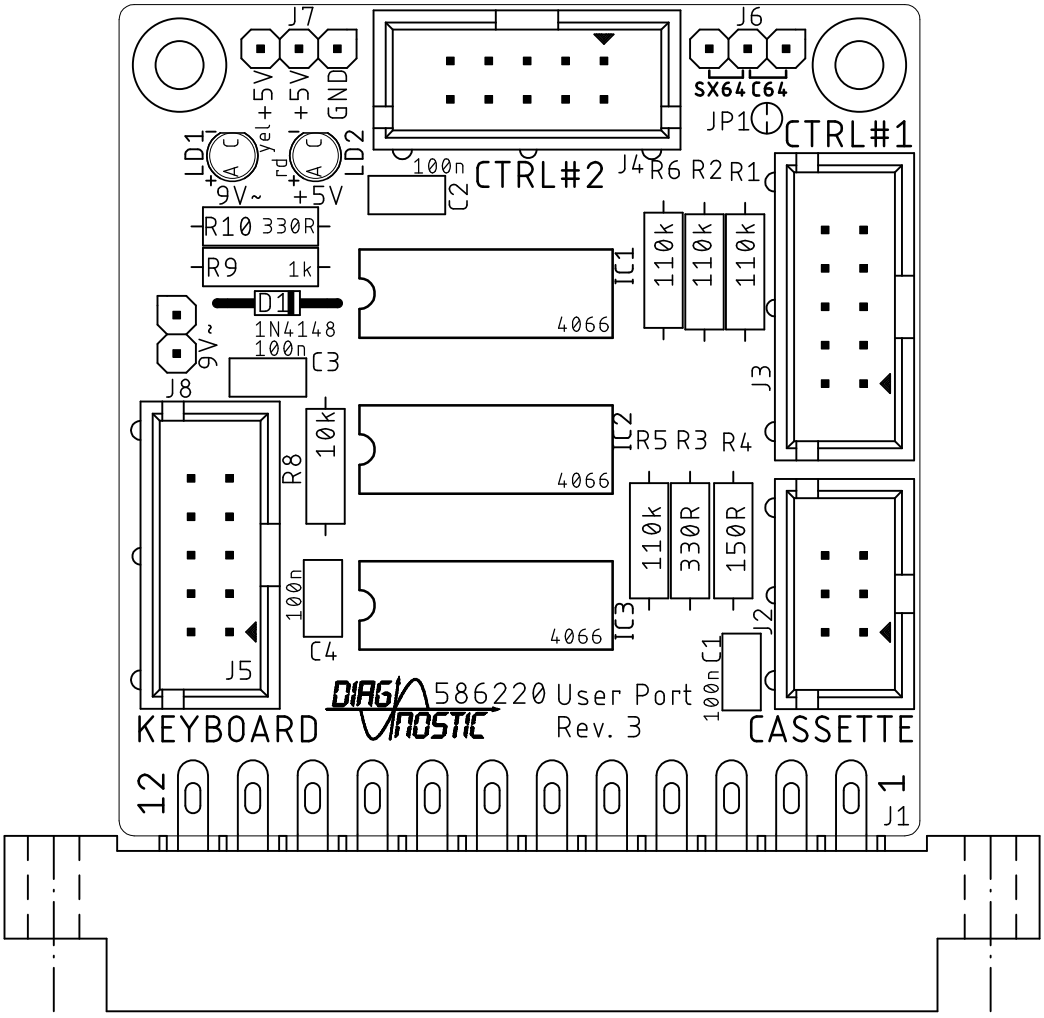

Sven Peterssen 2022	Doc.-No.: 113-2-01-03	
	Cu: 35µm	Cu-Layers: 2
C64_Userport_Test		
12.12.2022 14:05		Rev.: 3
placement component side		

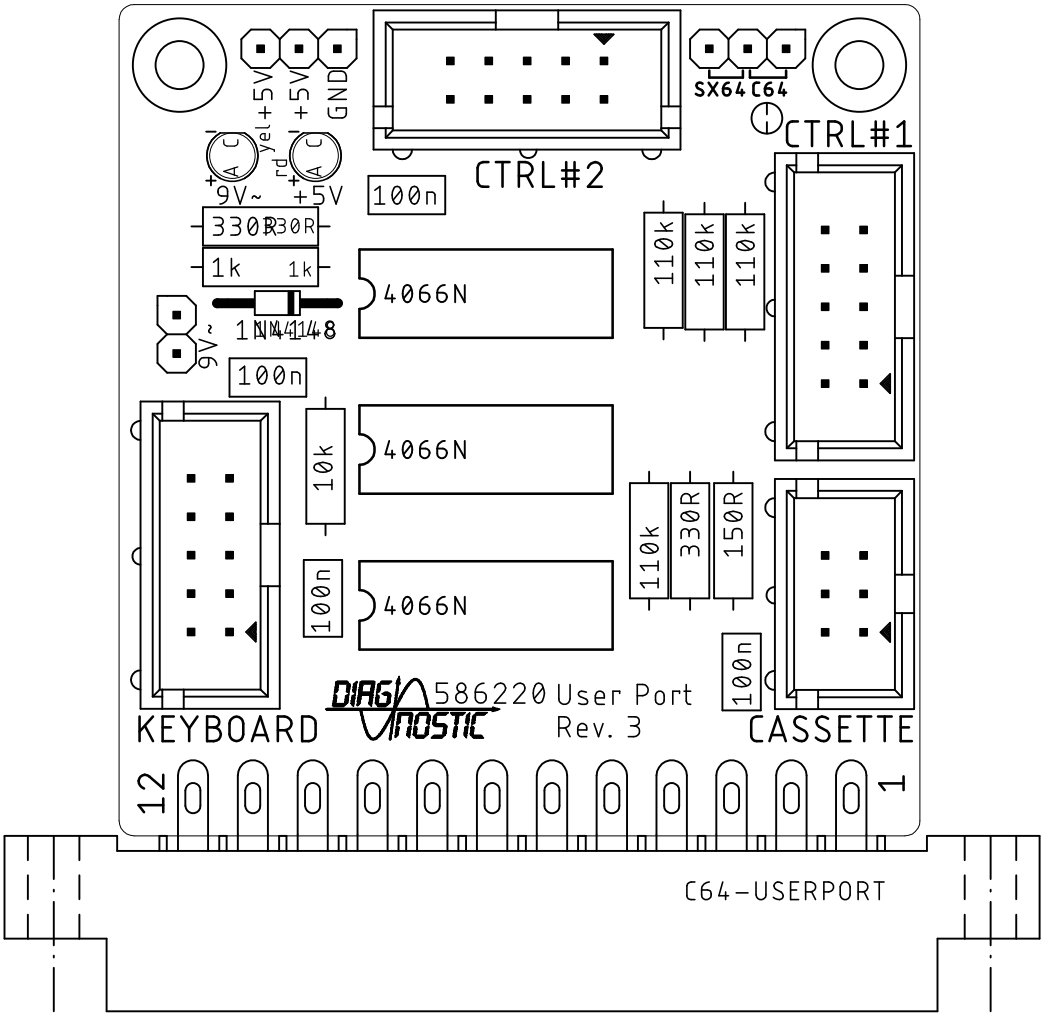

Sven Peterssen 2022	Doc.-No.: 113-2-01-03	
	Cu: 35µm	Cu-Layers: 2
C64_Userport_Test		
12.12.2022 14:05		Rev.: 3
		placement solder side

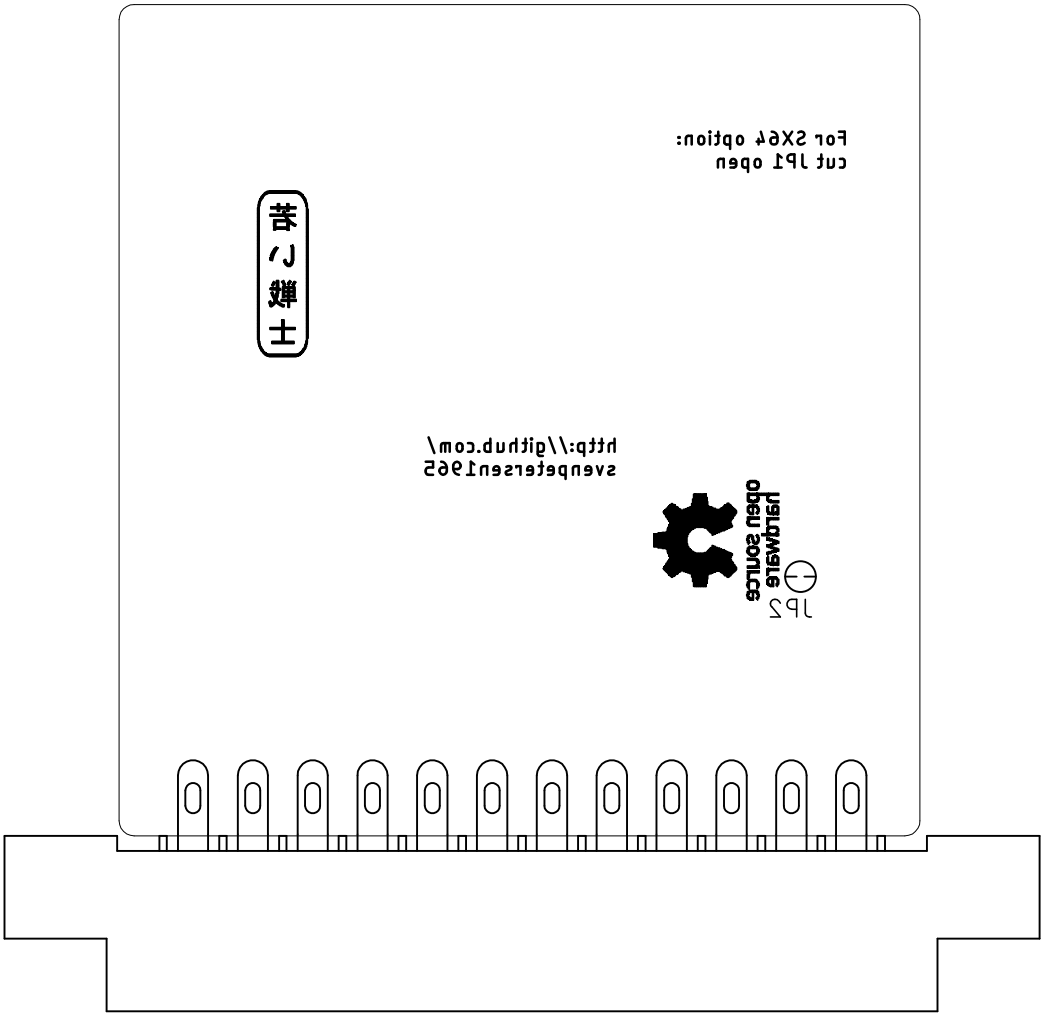

Sven Peterssen 2022	Doc.-No.: 113-2-01-03	
	Cu: 35µm	Cu-Layers: 2
C64_Userport_Test		
12.12.2022 14:05		Rev.: 3
top	[redacted]	

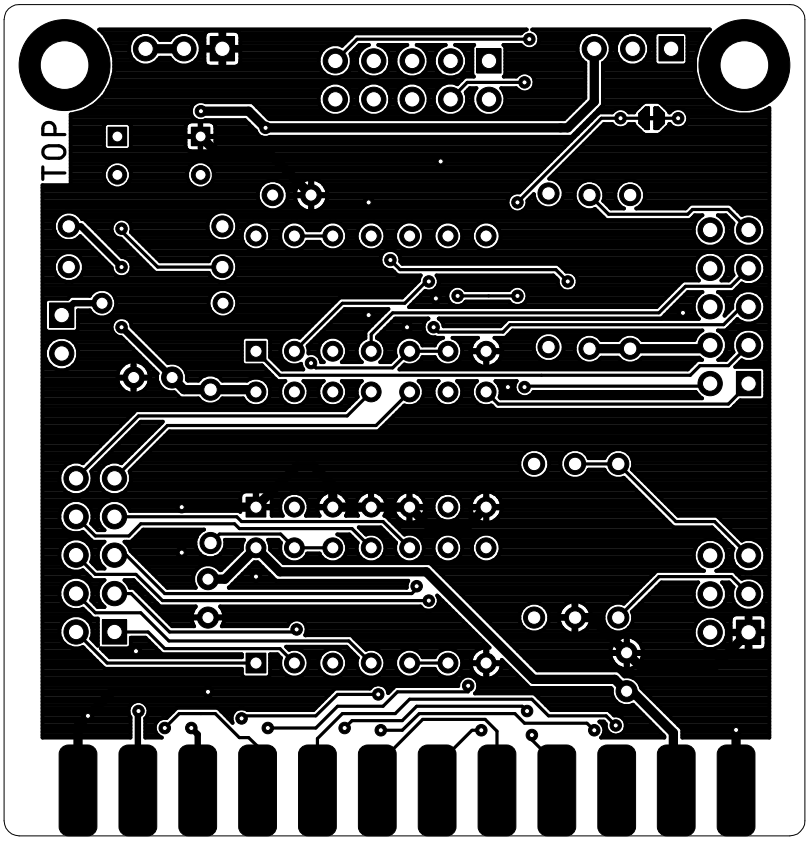

Sven Peterssen 2022	Doc.-No.: 113-2-01-03	
	Cu: 35µm	Cu-Layers: 2
C64_Userport_Test		
12.12.2022 14:05		Rev.: 3
bottom	[redacted]	

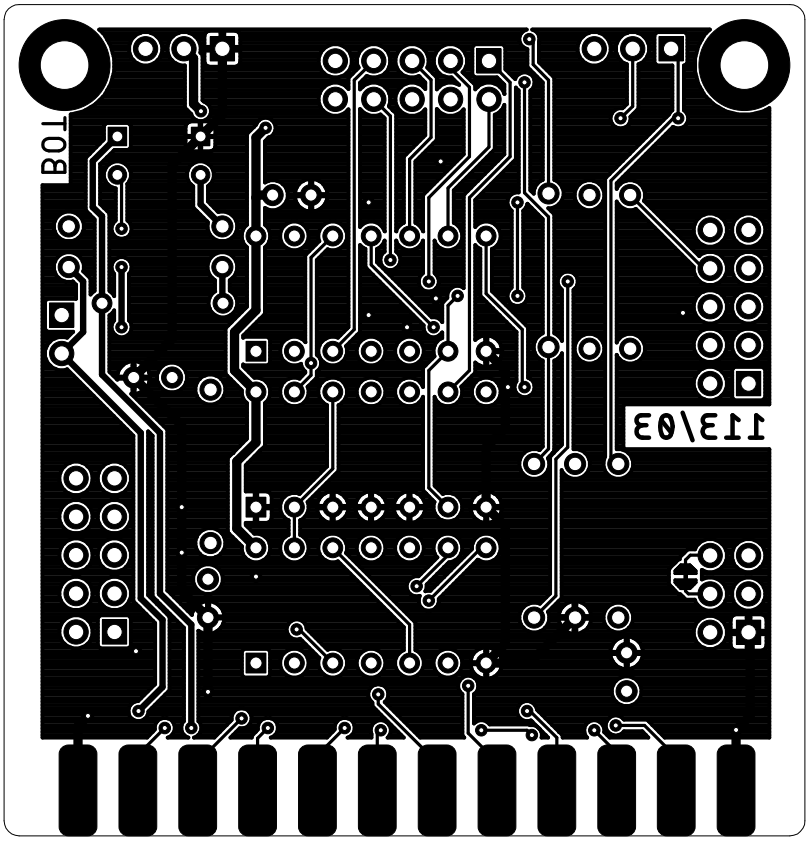

Sven Peterssen 2022	Doc.-No.: 113-2-01-03	
	Cu: 35µm	Cu-Layers: 2
C64_Userport_Test		
12.12.2022 14:05		Rev.: 3
stopmask component side		

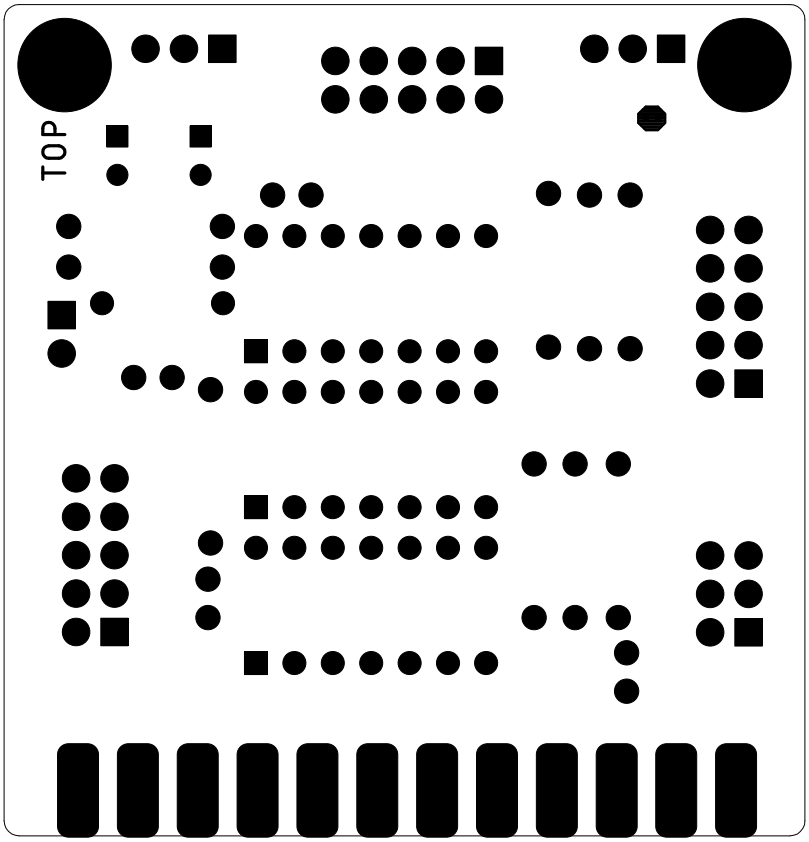

Sven Peterssen 2022	Doc.-No.: 113-2-01-03	
	Cu: 35µm	Cu-Layers: 2
C64_Userport_Test		
12.12.2022 14:05		Rev.: 3
stopmask solder side		

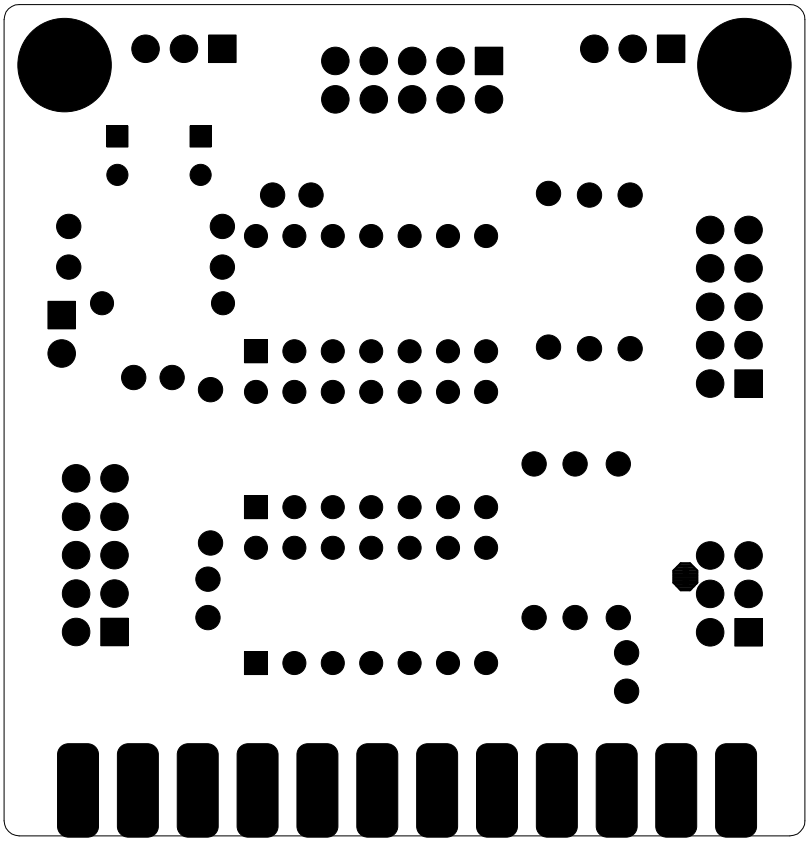

Sven Peterssen 2022	Doc.-No.: 113-2-01-03	
	Cu: 35µm	Cu-Layers: 2
C64_Userport_Test		
12.12.2022 14:05		Rev.: 3
placement component side measures		

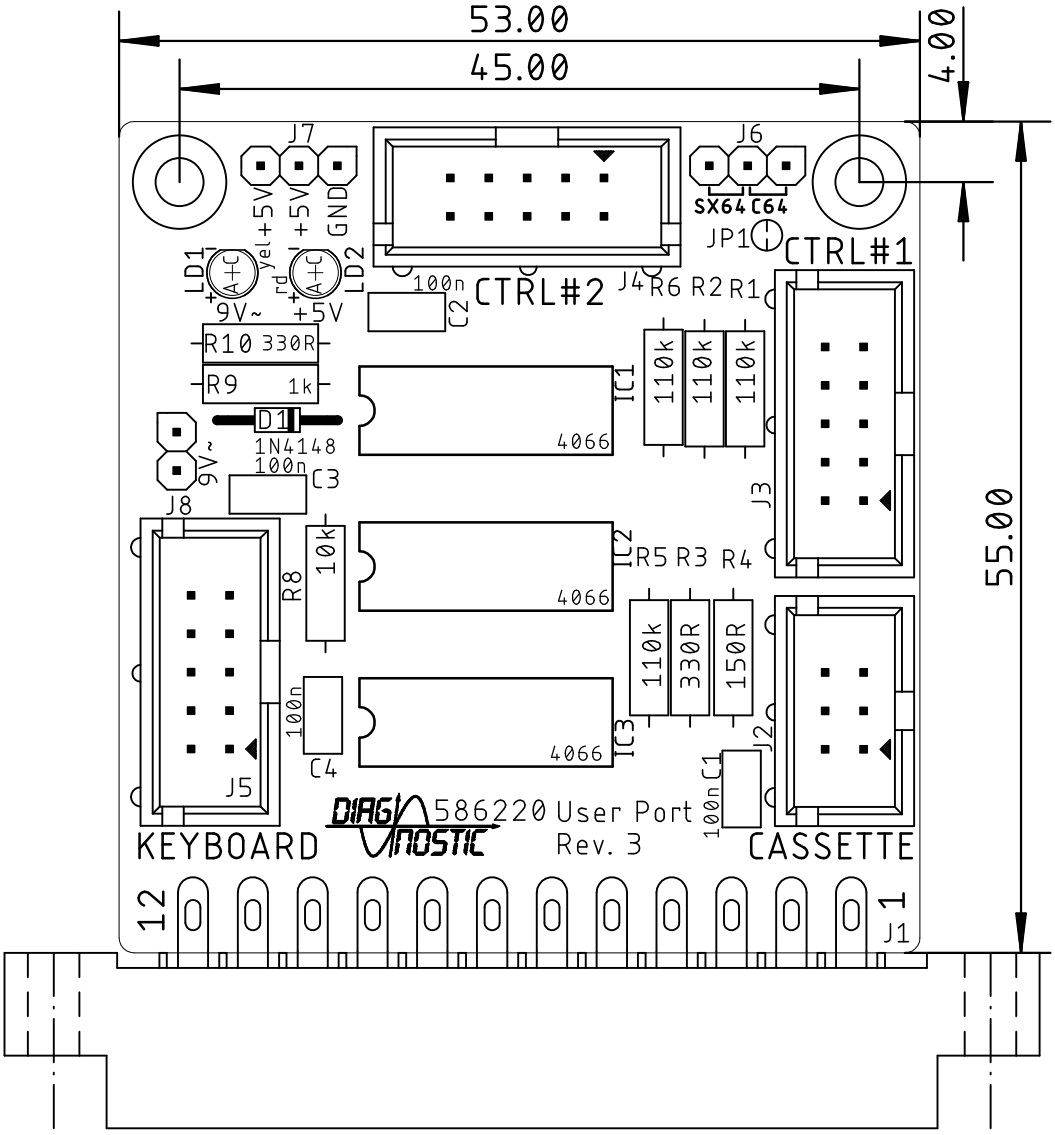

Diagnostic Rev. 586220 Harness - User Port Rev. 3

Testing

This document describes the testing procedure of the complete Rev. 1 diagnostic harness. A Rev. 0/1/2/3 Harness was connected to a known working C64 (ASSY250469). The dongles were introduced one by one.

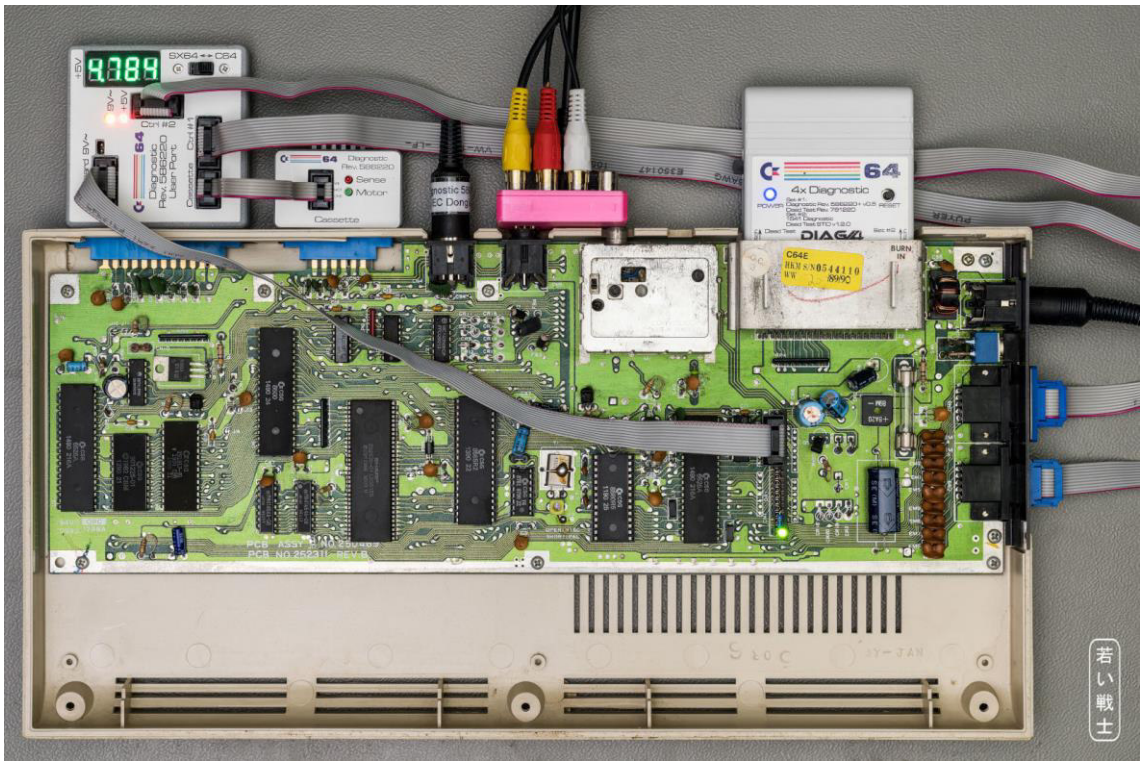

Figure 1: Harness Rev. 1 while being tested

First, the keyboard dongle Rev. 1 was connected, J2 was bridged with jumpers (the feedback connections were made permanent this way).

The Diagnostic Rev. 586220 cartridge was installed and the diagnostic test was run. It was completed successfully, all components were reported “OK”.

Next was the Cassette Dongle Rev. 1 being connected for the test. The diagnostic test was passed, all components were reported “OK”. The SENSE LED changed the status several times while the test, the MOTOR LED was off and only switched on for the cassette port test and the control port test.

The User Port Dongle Rev. 1 was then connected and a ribbon cable between J5 and the keyboard dongle Rev. 1. The diagnostic test was passed, all components were reported “OK”.

To simulate a failing control port connection, IC1 was extracted from the socket. The diagnostic test reported the control ports “BAD”. IC1 was installed again.

To simulate a failing keyboard connection, the ribbon cable to the keyboard dongle was removed. The diagnostic test reported the keyboard “BAD”.

The keyboard dongle was removed from the setup completely. The diagnostic test reported the keyboard “OPEN”.

The test harness was completely removed, except the Cassette Dongle. The Diagnostic Cartridge was disconnected from the C64. A Datassette with a tape was connected to the Cassette Dongle. The purpose of this test is to prove the breakout board properties of the Cassette Dongle.

The software on the tape could be loaded successfully.

A short program was written to (another) tape. It could be verified successfully.

Conclusion:

- The Diagnostic Harness Rev. 1 is fully functional.
- Rev. 2 is fully functional
- Rev. 3 is tested and working.

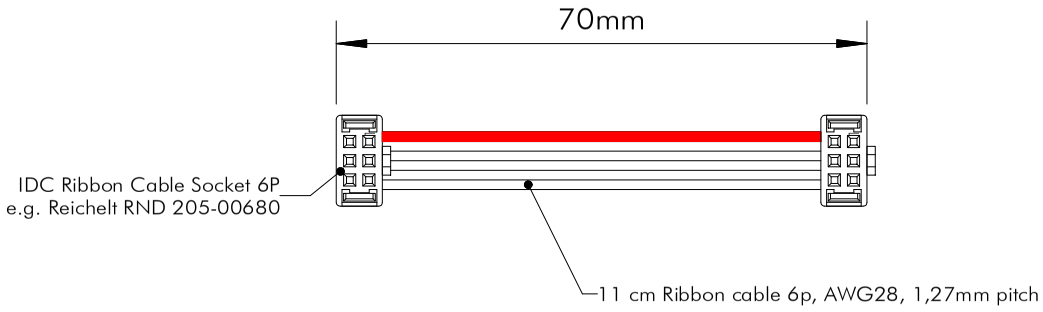

For C128 diagnostics: 250mm ribbon cable required.

Diagnostic 586220 Harness	Titel: User Port - Cassette Port Cable	Draft.: Sven Petersen
		File: UP-CASP.SKF
	Doc.-No.: 113-3-01-01	Rev.: 1
	Date: 08.06.2020 13:05	M 1 mm = 1 mm

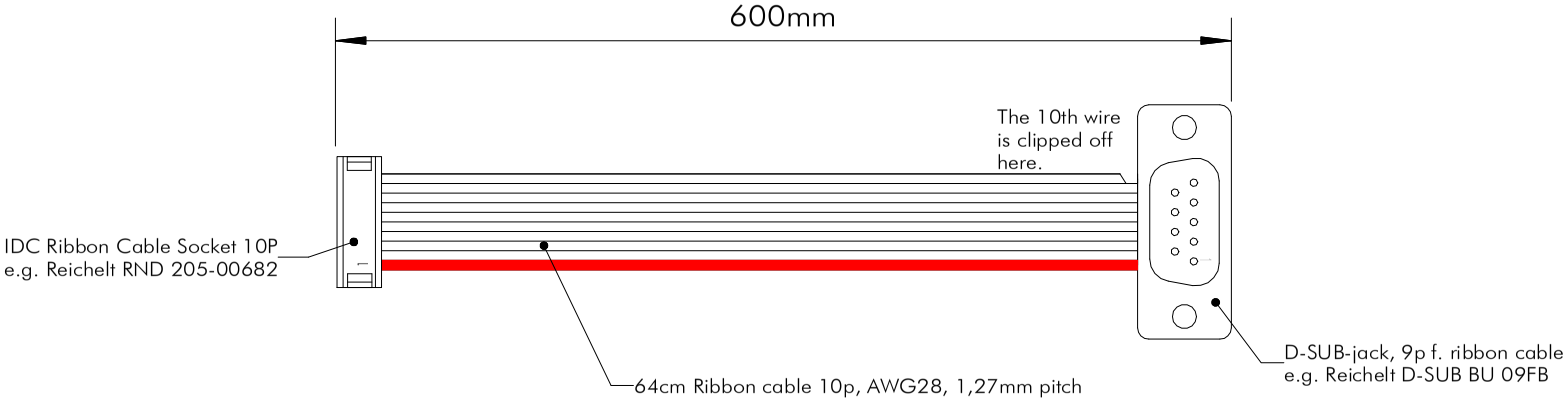

Diagnostic 586220 Harness	Titel: User Port - Control Port Cable	Draft.: Sven Petersen
		File: UP-CTRLP.SKF
	Doc.-No.: 113-3-02-01	Rev.: 1
	Date: 08.06.2020 13:08	M 1 mm = 1 mm

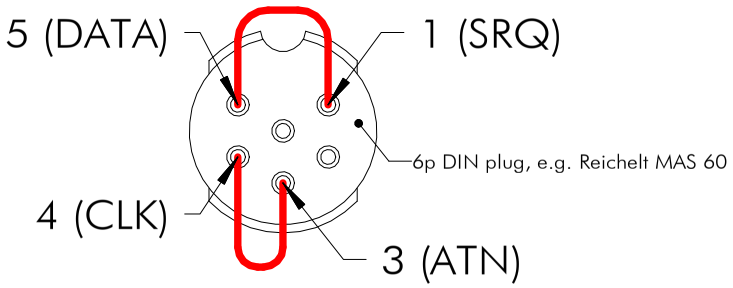

The open DIN plug, shown from the solder side.

Assembled IEC-Dongle

Diagnostic 586220 Harness	Titel: IEC-Dongle	Draft.: Sven Petersen
		File: IEC.SKF
	Doc.-No.: 113-3-03-00	Rev.: 0
	Date: 01.03.2019 18:15	M 1 mm = 1 mm

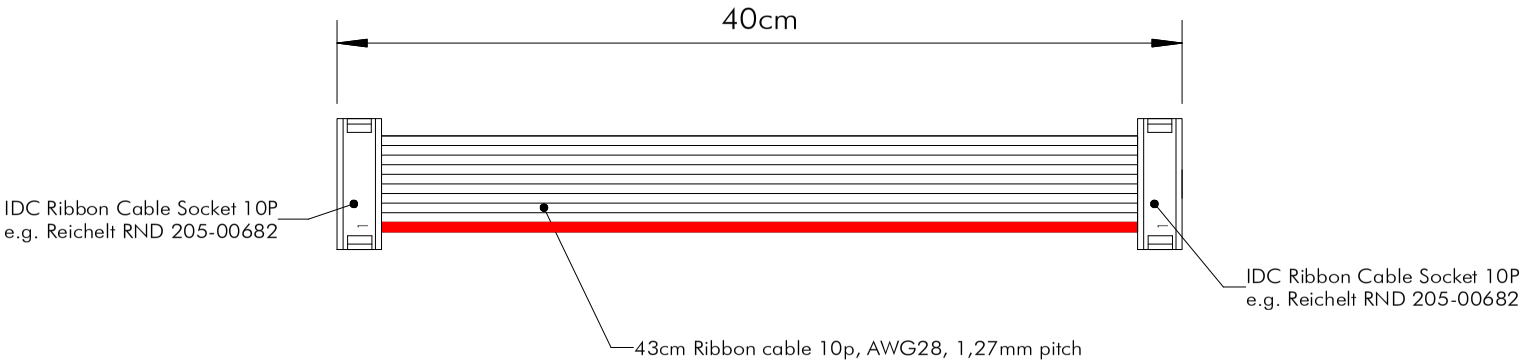

For C128 Diagnostics: 76cm ribbon cable required
(beside the C128 Keyboard PCB)

Diagnostic 586220 Harness	Titel: User Port - Keyboard PCB Cable	Draft.: Sven Petersen
		File: UP-KEYB.SKF
	Doc.-No.: 113-3-04-01	Rev.: 1
	Date: 08.06.2020 13:06	M 1 mm = 1 mm

Diagnostic Rev. 586220 Harness - User Port Rev. 3
Bill of Material Rev. 3.0

Pos.	Qty	Value	Footprint	Ref.-No.	Comment
1	1	113-2-01-03	2 Layer	PCB Rev. 3	2 layer, Cu 35µ, HASL, LLL x BBB, 1.6mm FR4
2	1	2x3 box connector	2X03WV	J2	e.g. Reichelt WSL 6G
3	3	2x5 box connector	2X05WV	J3, J4, J5	e.g. Reichelt WSL 10G
4	0	~~0R~~	R-10	~~R7~~	removed in Rev. 3
5	4	100n/50V	C-2,5	C1, C2, C3, C4	cer. cap, 2.5mm pitch
6	4	110k	R-10	R1, R2, R5, R6	1/4W, 1%
7	1	150R	R-10	R4	1/4W, 5%
8	1	316R	R-10	R3	1/4W, 5% (316Ω works, 330Ω should work as well)
9	3	HCF4066B	DIL14	IC1, IC2, IC3	ST Micro or equivalent
10	3	DIL 14	DIL14	(IC1), (IC2), (IC3)	DIL IC sockets
11	1	2x12, 3.96mm pitch	USERPORT	J1	edge connector, C64 user port
12	1	TP 1pin	1,2MM_R	TP1	optional, Pin Header, e.g. Reichelt RND 205-00622
13	182cm	10p/AWG28/1,27mm		Doc-No. 113-3-02-01, Doc.-No. 113-3-01-01, Doc.-No. 113-3-04-01	Ribbon Cable
14	2	6p IDC receptable, 2,54mm		Doc.-No. 113-2-01-01	e.g. Reichelt RND 205-00680
15	4	10p IDC receptable, 2,54mm		Doc.-No. 113-3-02-01, Doc.-No. 113-3-04-01	e.g. Reichelt RND 205-00682
16	2	9p D-SUB (female), IDC		Doc.-No. 113-3-02-01	e.g. Reichelt D-SUB BU 09FB
17	1	DIN-plug 6p		Doc.-No. 113-3-03-01	e.g. Reichelt MAS 60
18	4cm	Wire 0,25mm², red		Doc.-No. 113-3-03-01	wire, color what ever
19	1	10k	R-10	R8	1/4W, 5%
20	1	3x1pin, 2.54mm		J6	optional pin header, 2.54mm pitch
21	1	jumper, 2.54mm		(J6)	option. Toggle Switch can be connected alternatively
22	1	cut pad		JP1	not part, it is on the PCB. Closed by default for C64. For switching, cut open
23	1	1x3p., 2.54mm	1x03	J7	solderpads for voltmeter (see discription)
24	1	1x2p., 2.54mm	1x02	J8	do not place (see discription)

Diagnostic Rev. 586220 Harness - User Port Rev. 3
Bill of Material Rev. 3.0

Pos.	Qty	Value	Footprint	Ref.-No.	Comment
25	2	3mm, green	LED 3mm	LD1, LD2	standard LED
26	1	1N4148	DO-35	D1	diode
27	1	1k	R-10	R9	1/4W, 5%
28	1	330R	R-10	R10	1/4W, 5%

Rev. 0.1 → 0.2

Pos	6	now 110k
	8	now 316R

Rev. 0.2 → 1.0

Pos.	1	Board Revision
Pos.	3	J5 is new
Pos.	5	C4 is new
Pos.	9	IC3 is new
Pos.	10	IC3 is new
Pos.	12	TP2 and TP3 removed
Pos.	13	additional length
Pos.	15	2 more for additional cable
Pos.	19	R8 is new

Rev. 1.0 → 2.0

Pos.	1	PCB revision
Pos.	20	new
Pos.	21	new
Pos.	22	new

Diagnostic Rev. 586220 Harness - User Port Rev. 3
Bill of Material Rev. 3.0

Pos.	Qty	Value	Footprint	Ref.-No.	Comment
		Rev. 2.0 → 3.0			
Pos.	1	PCB Rev. 3			
Pos.	4	0R resistor R7 removed			
Pos.	23	new			
Pos.	24	new			
Pos.	25	new			
Pos.	26	new			
Pos.	27	new			
Pos.	28	new			