Project Documentation

Diagnostic Rev. 586220 Harness - User Port

Project number: 113

Revision: 1

Date: 23.02.2020

Diagnostic Rev. 586220 Harness - User Port Rev. 1

Module Description

The User Port module is the central part of the Diagnostic Rev. 586220 harness. It provides the required feedback connections for testing the C64's CIA U2, which is connected to the user port. It also holds the analog switches, which are required to test the Control Ports and the feedback connections for testing the cassette port.

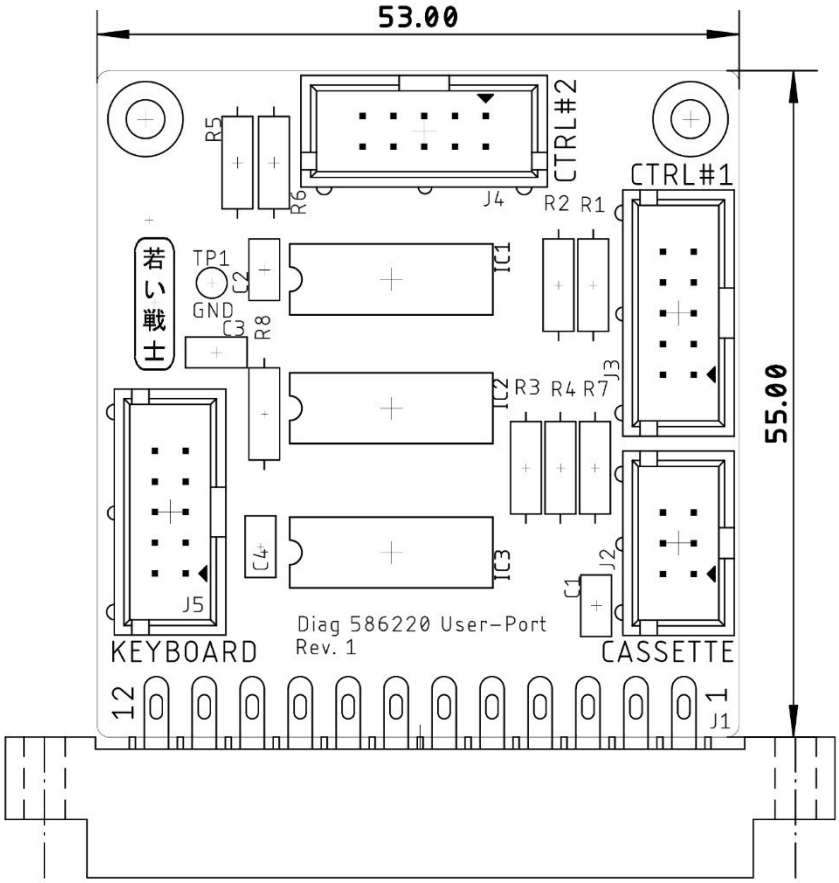

Figure 1: User Port PCB

The MOTOR output signal of the cassette port has approximately a 6V level. To use it as a control signal for operating logic devices, a voltage divider consisting out of a 150Ω resistor and a 320Ω (316Ω works here, 330Ω should work as well) resistor is required, which has a ratio of about 0.7.

This way, the MOTOR signal is fed back to the WRITE pin and is also used for switching the analog switches between the joystick signals of both control ports.

New on Rev. 1 are the analog switches for the keyboard feedbacks. This feature requires a ribbon cable to the keyboard PCB (Rev. 1). It does not connect to the Keyboard PCB Rev. 0.

The reason for this modification:

The feedbacks on keyboard dongle are identical to the feedback provided by the analog switches for the control port feedback. Since the feedbacks on the keyboard dongle are

permanent, the analog switches are not effective and the control ports are not fully tested. This can lead to a false "OK".

The new version can open the keyboard feedbacks with additional analog switches, so it is not required to remove the keyboard dongle for proper testing anymore.

Pin Outs

User Port

J1- Edge Connector (2x12, 3.96mm pitch)

Pin	Signal	Pin	Signal
1	GND	A	GND
2	+5V	B	/FLAG2
3	/RESET	C	PB0
4	CNT1	D	PB1
5	SP1	E	PB2
6	CNT2	F	PB3
7	SP2	H	PB4
8	/PC2	J	PB5
9	ATN	K	PB6
10	9VAC(1)	L	PB7
11	9VAC(2)	M	PA2
12	GND	N	GND

Cassette Port

J2 – 2x3 pin header for a ribbon cable connected to the cassette port PCB (project number 114).

Pin	Signal	Pin	Signal
1	GND	2	n.c.
3	MOTOR	4	READ
5	WRITE	6	SENSE

Control Port #1

J3 – 2x5 pin header for a ribbon cable which connects via a D-SUB 9 (female) to the control port.

Pin	D-*SUB*	Signal	Pin	D-*SUB*	Signal
1	1	JOYA0 (up)	2	6	FIREA
3	2	JOYA1 (down)	4	7	+5VCTR1
5	3	JOYA2 (left)	6	8	n.c. (GND)
7	4	JOYA3 (right)	8	9	POTXA
9	5	POTYA	10	-	n.c.

Control Port #2

J4 – 2x5 pin header for a ribbon cable which connects via a D-SUB 9 (female) to the control port.

Pin	D-*SUB*	Signal	Pin	D-*SUB*	Signal
1	1	JOYB0 (up)	2	6	FIREB
3	2	JOYB1 (down)	4	7	+5VCTR2
5	3	JOYB2 (left)	6	8	n.c. (GND)
7	4	JOYB3 (right)	8	9	POTXB
9	5	POTYB	10	-	n.c.

Keyboard

J5 – 2x5 pin header for a ribbon cable which connects to the keyboard PCB.

Pin	Signal	Pin	Signal
1	*Keyboard PB0*	2	*Keyboard PA0*
3	*Keyboard PB4*	4	*Keyboard PA4*
5	*Keyboard PB3*	6	*Keyboard PA3*
7	*Keyboard PB2*	8	*Keyboard PA2*
9	*Keyboard PB1*	10	*Keyboard PA1*

Interconnects

User Port

Pin	Signal		Signal	Pin
4	CNT1	↔	CNT2	6
5	SP1	↔	SP2	7
8	/PC2	↔	/FLAG2	B
9	ATN	↔	PA2	M
C	PB0	↔	PB4	H
D	PB1	↔	PB5	J
E	PB2	↔	PB6	K
F	PB3	↔	PB7	L

Cassette Port

Pin	Signal		Signal	Pin
3	MOTOR	Volt.div.	WRITE	5
4	READ	↔	SENSE	6

Control Ports

Signal		Signal
FIREA	switched by MOTOR	FIREB
JOYA0	switched by MOTOR	JOYB0
JOYA1	switched by MOTOR	JOYB1
JOYA2	switched by MOTOR	JOYB2
JOYA3	switched by MOTOR	JOYB3
POTXA	via 110kΩ (R1)	+5V (CTR 1)
POTYA	via 110kΩ (R2)	+5V (CTR 1)
POTXB	via 110kΩ (R5)	+5V (CTR 2)
POTYB	via 110kΩ (R6)	+5V (CTR 2)

The digital signals of the control ports are connected by an analog switch. A HIGH level of the MOTOR signal will switch on.

The POT (paddle) signals are tested with a fix resistor of 110k, that is connected to the +5V provided by the respective control port.

Cables

User Port/Cassette Port Cable

One cable as shown in Doc.-No. 113-3-01-01 is required. It connects to J2.

User Port/Control Cables

Two cables as shown in Doc.-Nr. 113-3-02-01 are required. They connect to J3 and J4.

User Port/Keyboard PCB Cable

One cable as shown in Doc.-No. 113-3-04-01 is required. It connects to J5

The IEC-Dongle

The IEC-Dongle is not attached to the PCB, it is an extra built.

6p. DIN plug, connect according to Doc.-No. 113-3-03-01

Pin	Signal		Signal	Pin
1	SRQ	↔	DATA	5
3	ATN	↔	CLK	4

Revision History

BOM v0.1 → v0.2

- Pos. 6: value 120k →110k
- Pos. 8: value 320R →316R

Rev. 0 → Rev. 1

- This is a PCB revision
- Analog switches added (IC3)
- Pin header added (J5)
- New Ribbon Cable
- 3D printed case (Rev. 1) is required

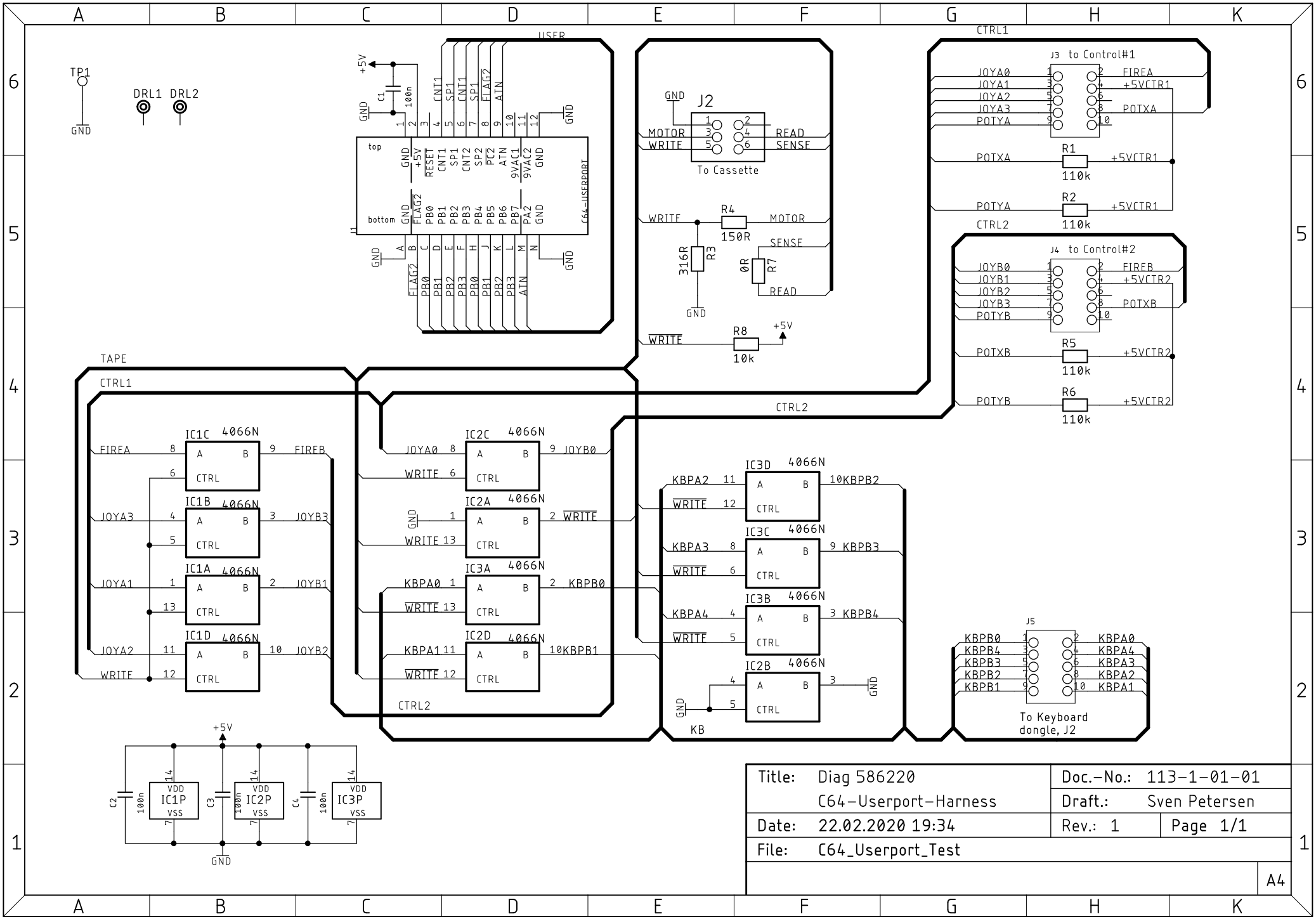

Title:	Diag 586220 C64-Userport-Harness	Doc.-No.:	113-1-01-01
		Draft.:	Sven Petersen
Date:	22.02.2020 19:34	Rev.: 1	Page 1/1
File:	C64_Userport_Test		
			A4

Diag 586220 Harness 2020	Doc.-No.: 113/2/01/01	
	Cu: 35µm	Cu-Layers: 2
C64_Userport_Test		
23.02.2020 11:53		Rev.: 1
placement component side		

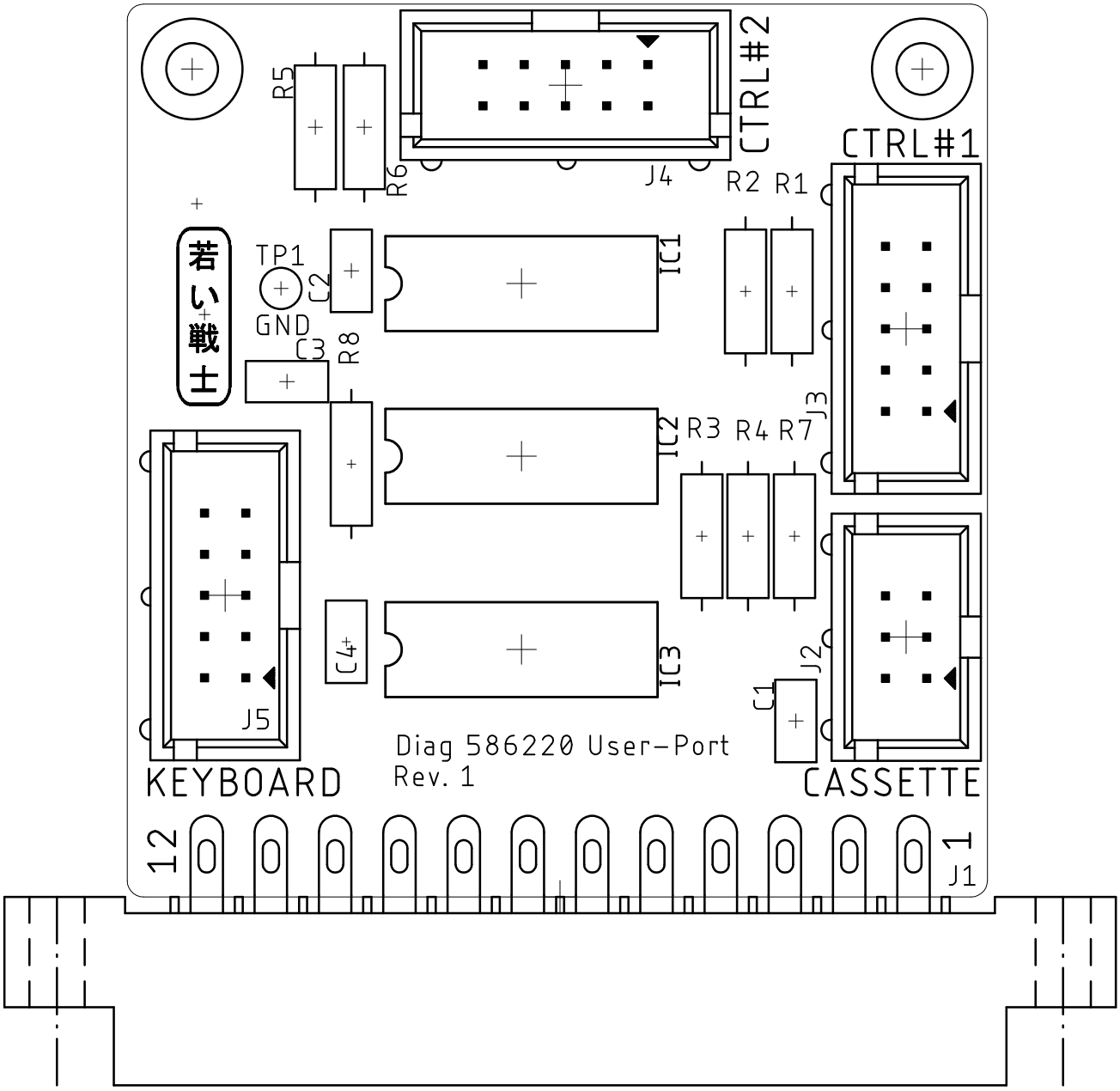

Diag 586220 Harness 2020	Doc.-No.: 113/2/01/01	
	Cu: 35µm	Cu-Layers: 2
C64_Userport_Test		
23.02.2020 11:53		Rev.: 1
placement component side		

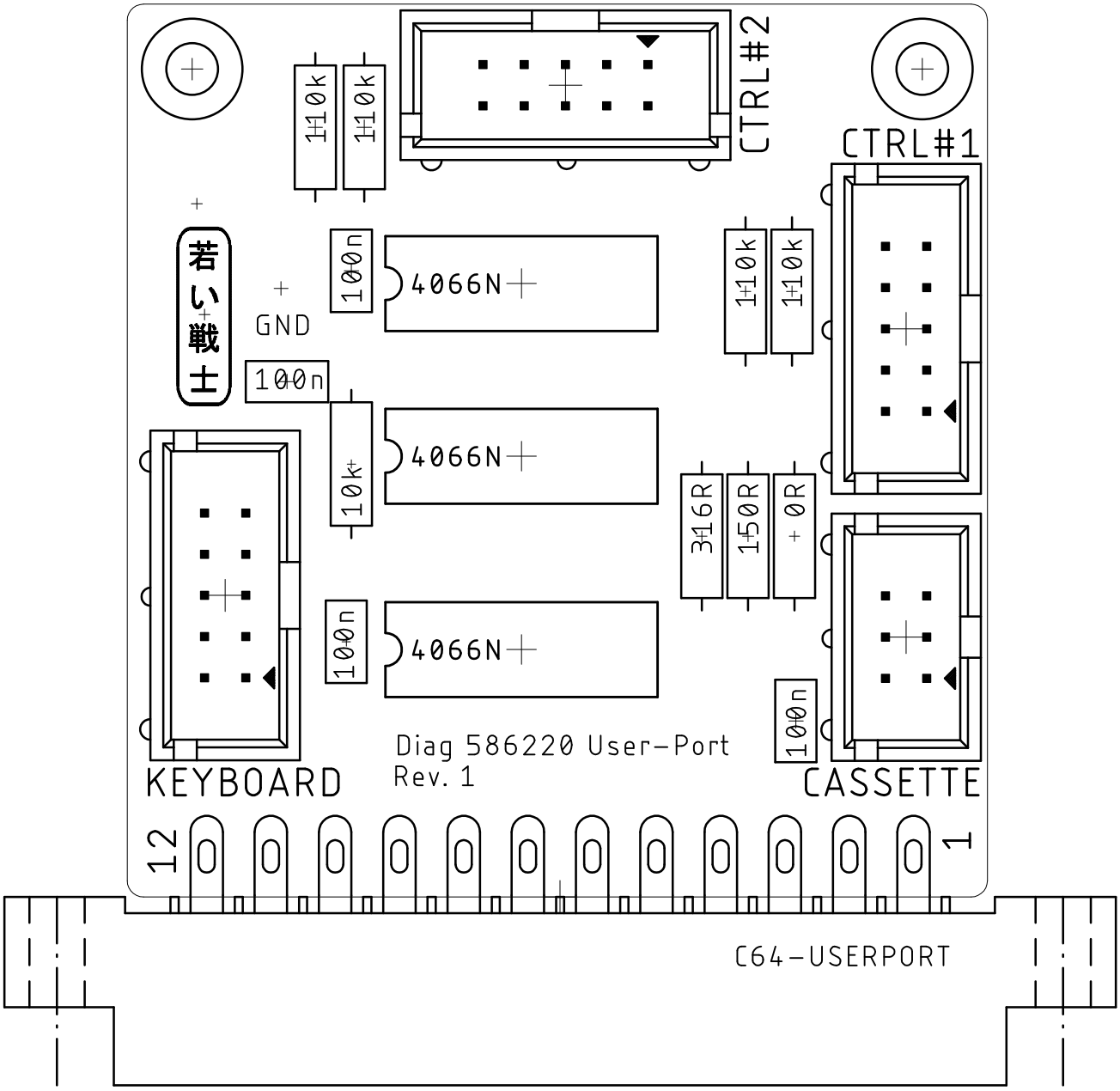

Diag 586220 Harness 2020	Doc.-No.: 113/2/01/01	
	Cu: 35µm	Cu-Layers: 2
C64_Userport_Test		
23.02.2020 11:53		Rev.: 1
top	[redacted]	

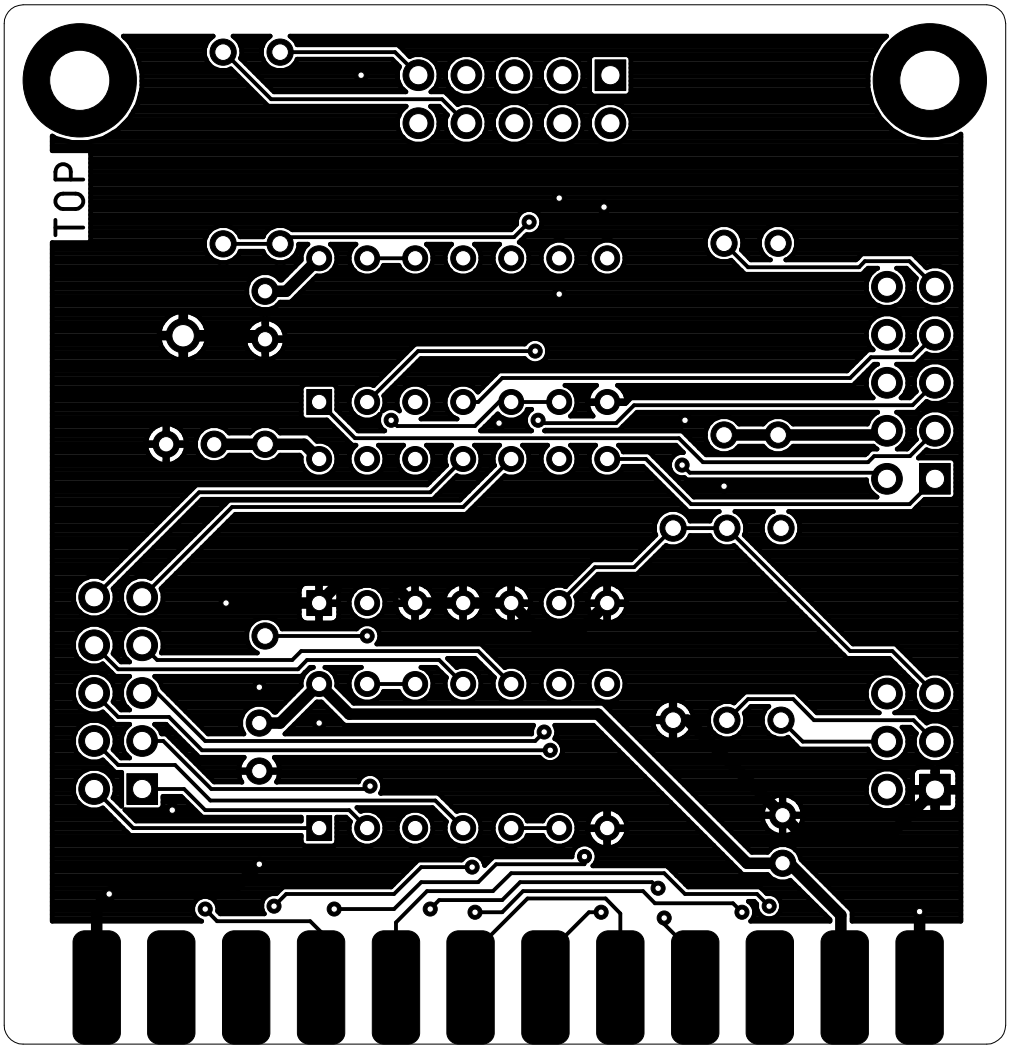

Diag 586220 Harness 2020	Doc.-No.: 113/2/01/01	
	Cu: 35µm	Cu-Layers: 2
C64_Userport_Test		
23.02.2020 11:53		Rev.: 1
bottom	[redacted]	

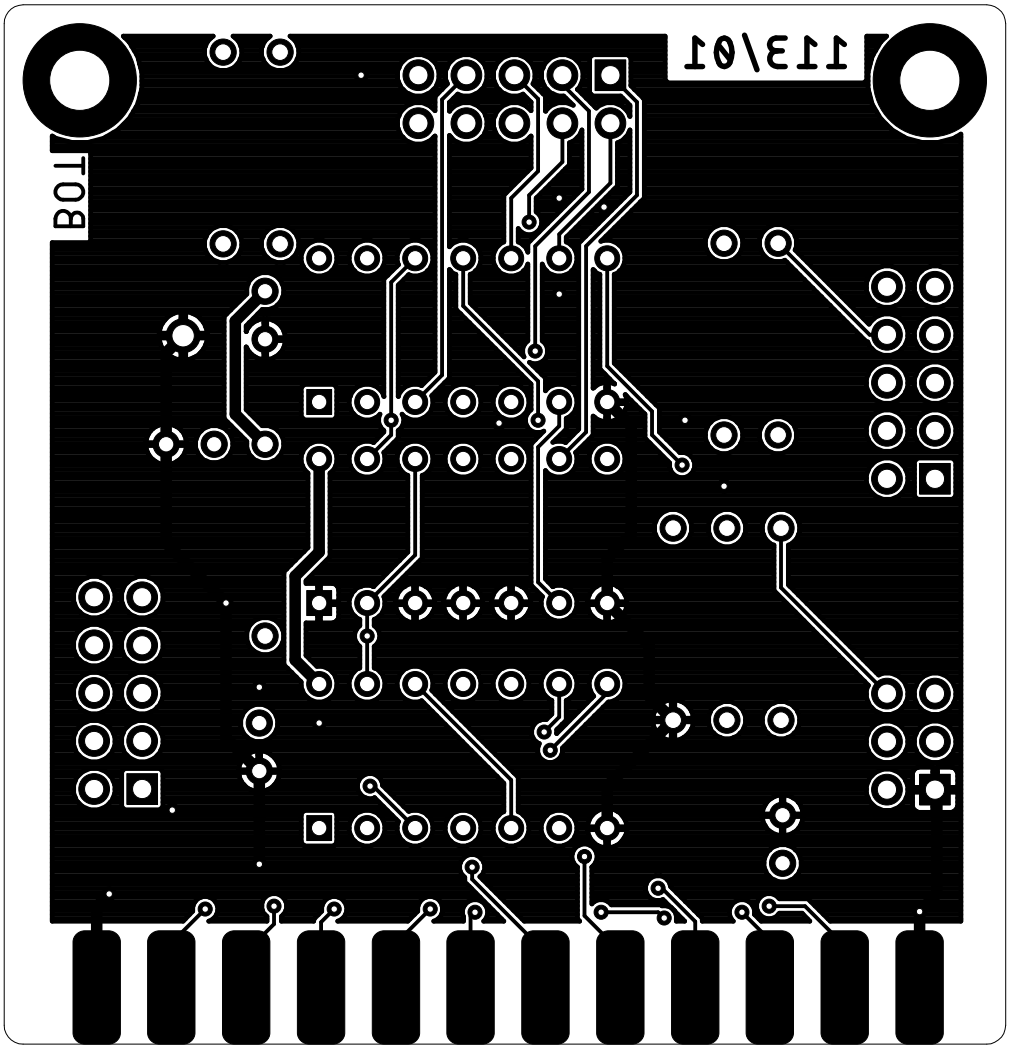

Diag 586220 Harness 2020	Doc.-No.: 113/2/01/01	
	Cu: 35µm	Cu-Layers: 2
C64_Userport_Test		
23.02.2020 11:53		Rev.: 1
stopmask component side		

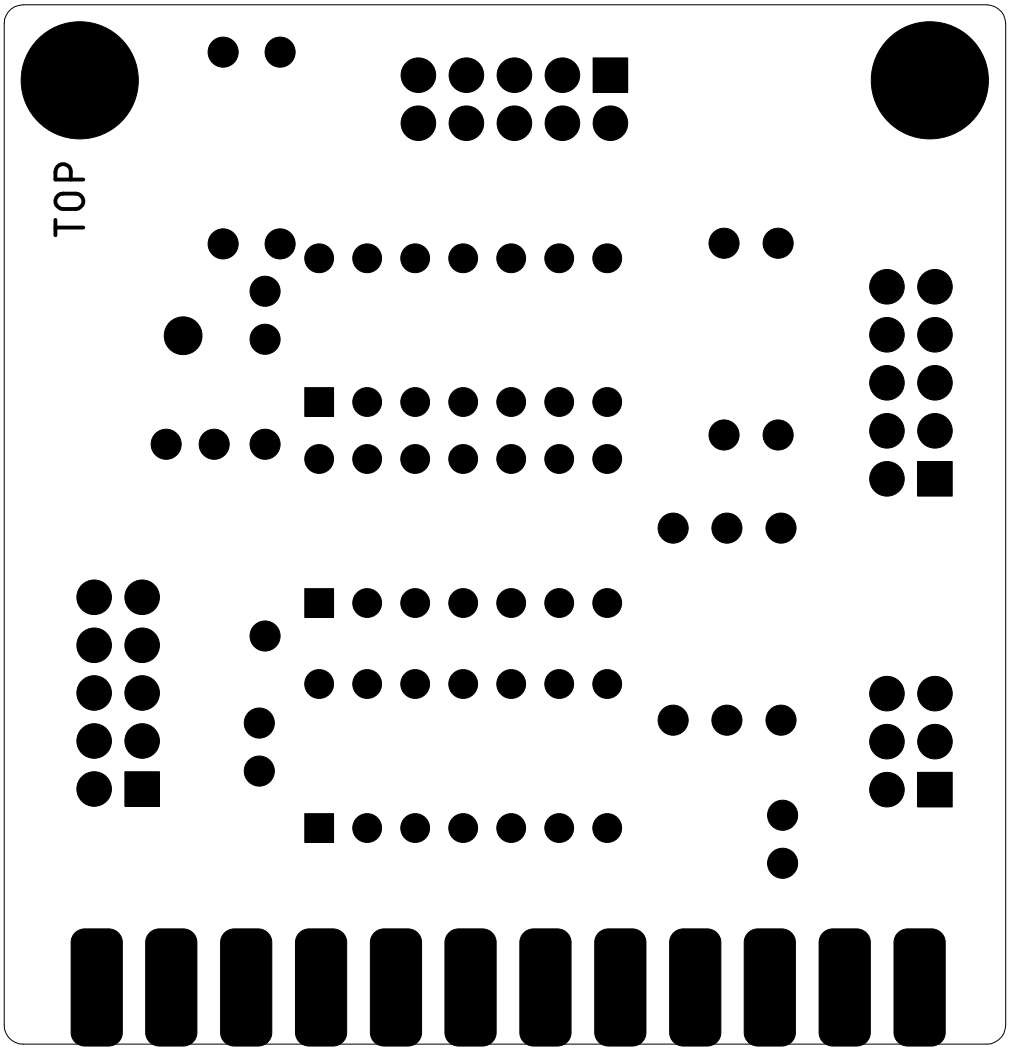

Diag 586220 Harness 2020	Doc.-No.: 113/2/01/01	
	Cu: 35µm	Cu-Layers: 2
C64_Userport_Test		
23.02.2020 11:53		Rev.: 1
stopmask solder side		

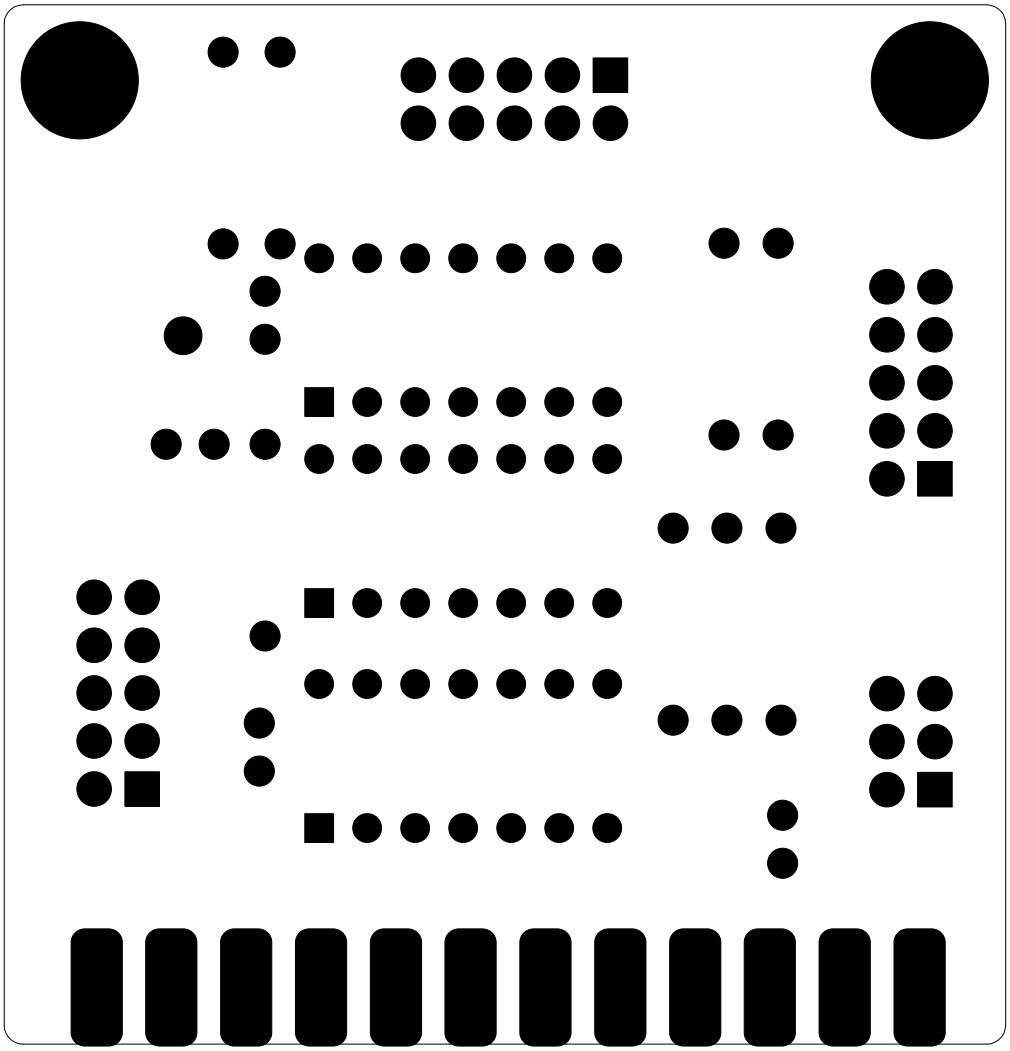

Diag 586220 Harness 2020	Doc.-No.: 113/2/01/01	
	Cu: 35µm	Cu-Layers: 2
C64_Userport_Test		
23.02.2020 11:53		Rev.: 1
placement component side measures		

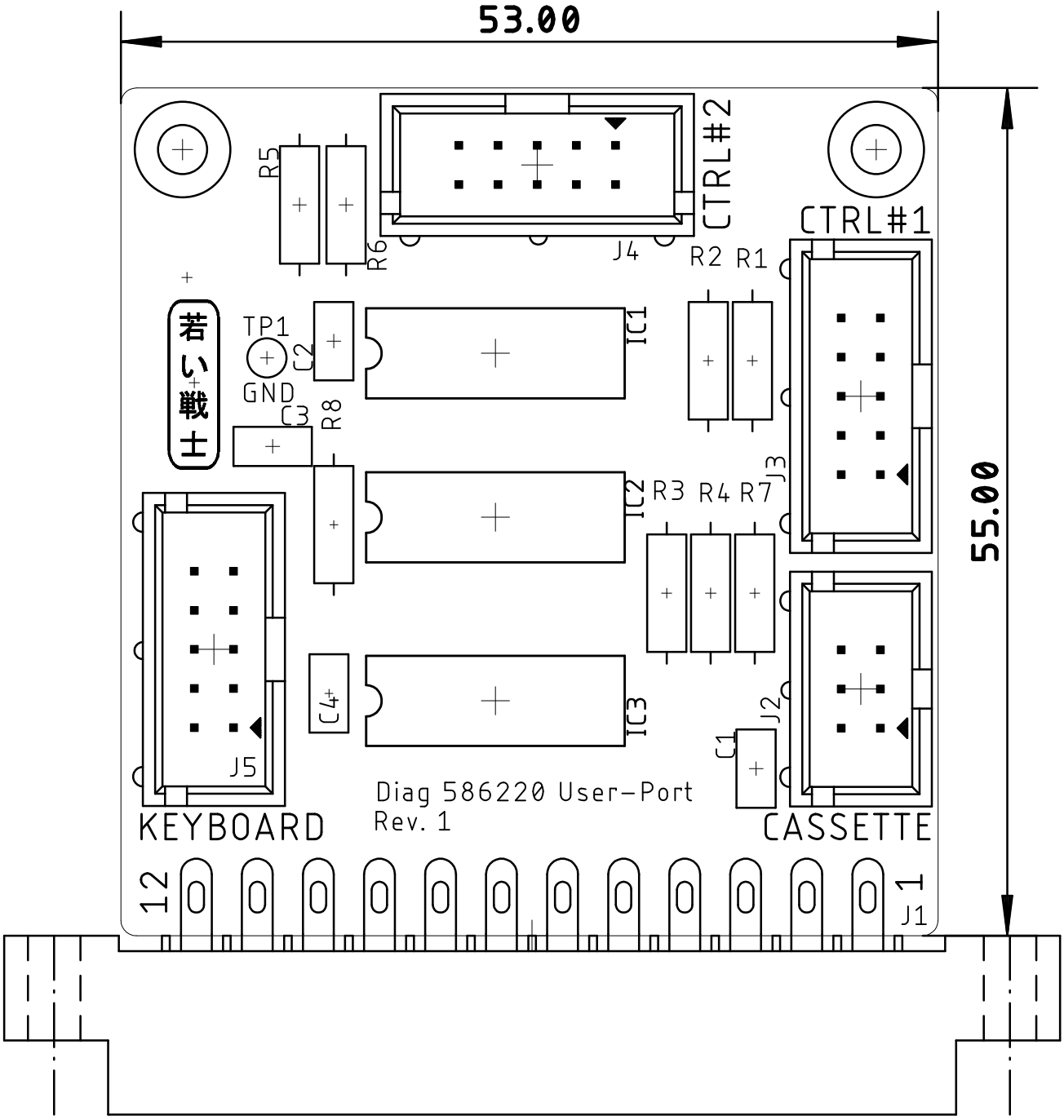

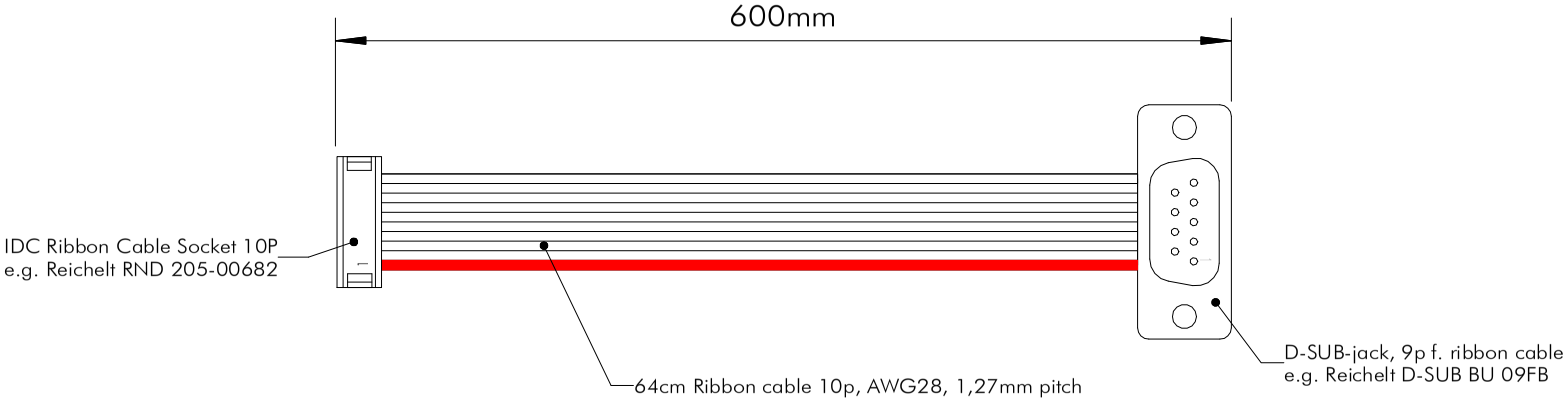

Diagnostic 586220 Harness	Titel: User Port - Control Port Cable	Draft.: Sven Petersen
		File: UP-CTRLP.SKF
	Doc.-No.: 113-3-02-01	Rev.: 1
	Date: 23.02.2020 12:29	M 1 mm = 1 mm

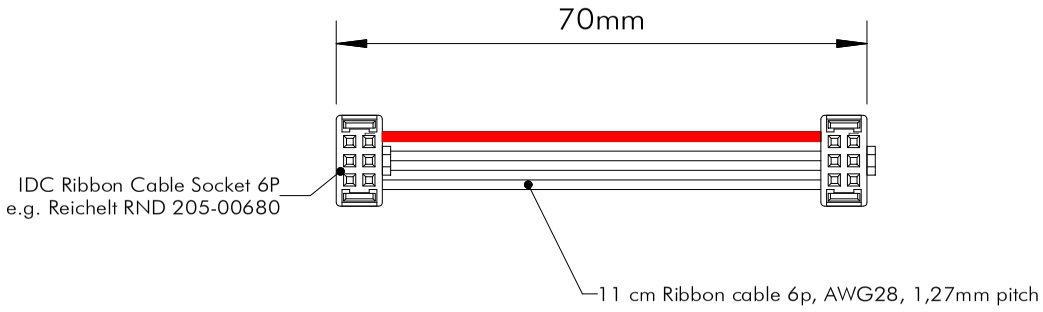

Diagnostic 586220 Harness	Titel: User Port - Cassette Port Cable	Draft.: Sven Petersen
		File: UP-CASP.SKF
	Doc.-No.: 113-3-01-01	Rev.: 1
	Date: 23.02.2020 12:30	M 1 mm = 1 mm

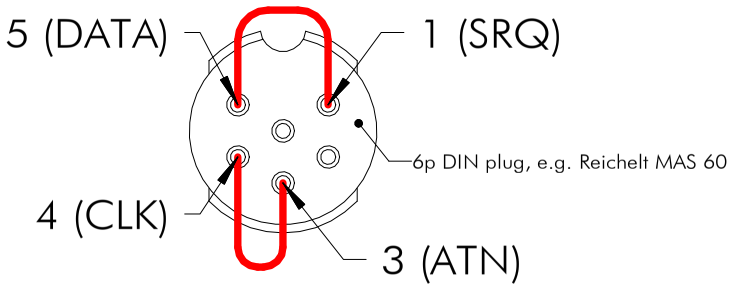

The open DIN plug, shown from the solder side.

Assembled IEC-Dongle

Diagnostic 586220 Harness	Titel: IEC-Dongle	Draft.: Sven Petersen
		File: IEC.SKF
	Doc.-No.: 113-3-03-01	Rev.: 1
	Date: 23.02.2020 12:27	M 1 mm = 1 mm

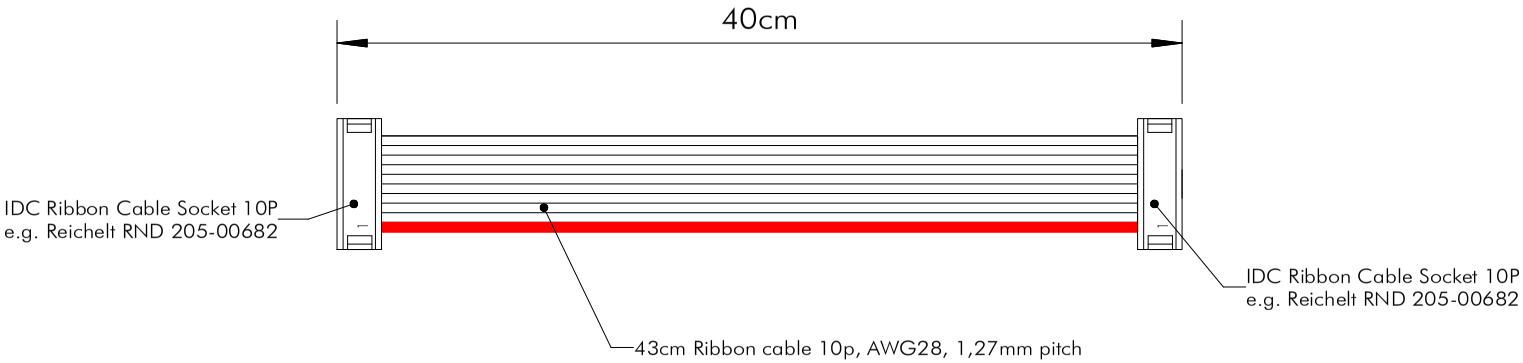

Diagnostic 586220 Harness	Titel: User Port - Control Port Cable	Draft.: Sven Petersen
		File: UP-KEYB.SKF
	Doc.-No.: 113-3-04-01	Rev.: 1
	Date: 23.02.2020 12:26	M 1 mm = 1 mm

Diagnostic Rev. 586220 Harness - User Port Rev. 1

Testing

This document describes the testing procedure of the complete Rev. 1 diagnostic harness. A Rev. 0 Harness was connected to a known working C64 (ASSY250469). The dongles were introduced one by one.

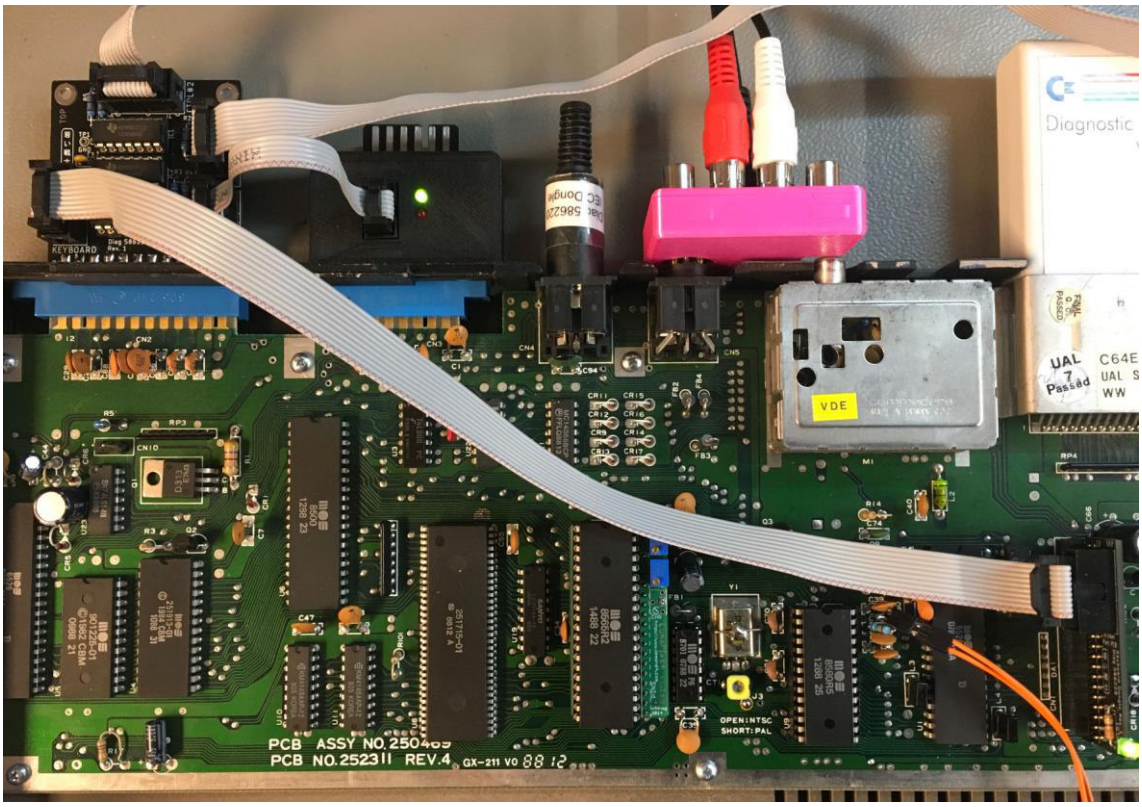

Figure 1: Harness Rev. 1 while being tested

First, the keyboard dongle Rev. 1 was connected, J2 was bridged with jumpers (the feedback connections were made permanent this way).

The Diagnostic Rev. 586220 cartridge was installed and the diagnostic test was run. It was completed successfully, all components were reported “OK”.

Next was the Cassette Dongle Rev. 1 being connected for the test. The diagnostic test was passed, all components were reported “OK”. The SENSE LED changed the status several times while the test, the MOTOR LED was off and only switched on for the cassette port test and the control port test.

The User Port Dongle Rev. 1 was then connected and a ribbon cable between J5 and the keyboard dongle Rev. 1. The diagnostic test was passed, all components were reported “OK”.

To simulate a failing control port connection, IC1 was extracted from the socket. The diagnostic test reported the control ports “BAD”. IC1 was installed again.

To simulate a failing keyboard connection, the ribbon cable to the keyboard dongle was removed. The diagnostic test reported the keyboard “BAD”.

The keyboard dongle was removed from the setup completely. The diagnostic test reported the keyboard "OPEN".

The test harness was completely removed, except the Cassette Dongle. The Diagnostic Cartridge was disconnected from the C64. A Datassette with a tape was connected to the Cassette Dongle. The purpose of this test is to prove the breakout board properties of the Cassette Dongle.

The software on the tape could be loaded successfully.

A short program was written to (another) tape. It could be verified successfully.

Conclusion:

The Test Harness Rev. 1 is fully functional.

Diagnostic Rev. 586220 Harness - User Port Rev. 1
Bill of Material Rev. 1.0

Pos.	Qty	Value	Footprint	Ref.-No.	Comment
1	1	113-2-01-01	2 Layer	PCB Rev. 1	2 layer, Cu 35μ, HASL, LLL x BBB, 1.6mm FR4
2	1	2x3 box connector	2X03WV	J2	e.g. Reichelt WSL 6G
3	3	2x5 box connector	2X05WV	J3, J4, J5	e.g. Reichelt WSL 10G
4	1	0R	R-10	R7	0 Ohm bridge, can also be a wire
5	4	100n/50V	C-2,5	C1, C2, C3, C4	cer. cap, 2.5mm pitch
6	4	110k	R-10	R1, R2, R5, R6	1/4W, 1%
7	1	150R	R-10	R4	1/4W, 5%
8	1	316R	R-10	R3	1/4W, 5% (316Ω works, 330Ω should work as well)
9	3	HCF4066B	DIL14	IC1, IC2, IC3	ST Micro or equivalent
10	3	DIL 14	DIL14	(IC1), (IC2), (IC3)	DIL IC sockets
11	1	2x12, 3.96mm pitch	USERPORT	J1	edge connector, C64 user port
12	1	TP 1pin	1,2MM_R	TP1	optional, Pin Header, e.g. Reichelt RND 205-00622
13	182cm	10p/AWG28/1,27mm		Doc-No. 113-3-02-01, Doc.-No. 113-3-01-01, Doc.-No. 113-3-04-01	Ribbon Cable
14	2	6p IDC receptable, 2,54mm		Doc.-No. 113-2-01-01	e.g. Reichelt RND 205-00680
15	4	10p IDC receptable, 2,54mm		Doc.-No. 113-3-02-01, Doc.-No. 113-3-04-01	e.g. Reichelt RND 205-00682
16	2	9p D-SUB (female), IDC		Doc.-No. 113-3-02-01	e.g. Reichelt D-SUB BU 09FB
17	1	DIN-plug 6p		Doc.-No. 113-3-03-01	e.g. Reichelt MAS 60
18	4cm	Wire 0,25mm^2, red		Doc.-No. 113-3-03-01	wire, color what ever
19	1	10k	R-10	R8	1/4W, 5%

Rev. 0.1 → 0.2

Pos 6 now 110k

8 now 316R

Diagnostic Rev. 586220 Harness - User Port Rev. 1
Bill of Material Rev. 1.0

Pos.	Qty	Value	Footprint	Ref.-No.	Comment
		Rev. 0.2 → 1.0			
Pos.	1	Board Revision			
Pos.	3	J5 is new			
Pos.	5	C4 is new			
Pos.	9	IC3 is new			
Pos.	10	IC3 is new			
Pos.	12	TP2 and TP3 removed			
Pos.	13	additional length			
Pos.	15	2 more for additional cable			
Pos.	19	R8 is new			