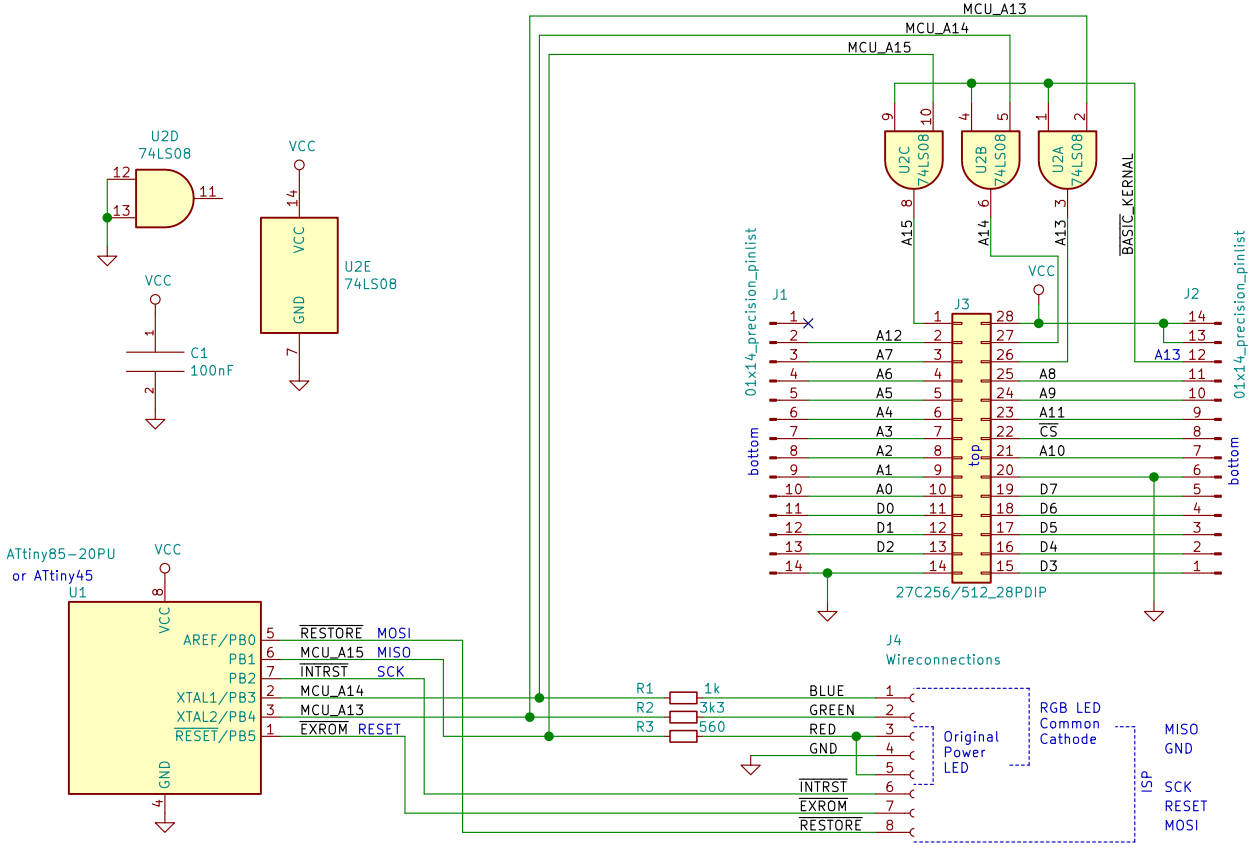

Ideas from Sven Petersen's switcher
must include basic image at first 8k bank
C64 Short motherboard version

Bwack

Sheet: /
File: C64-Switchless-Quad-Kernal-Switcher.sch

Title: C64 Switchless Quad Kernal Switcher - shortboard

Size: A4	Date: 2019-07-18	**Rev: 1.0**
KiCad E.D.A. kicad (5.1.2)-1		Id: 1/1