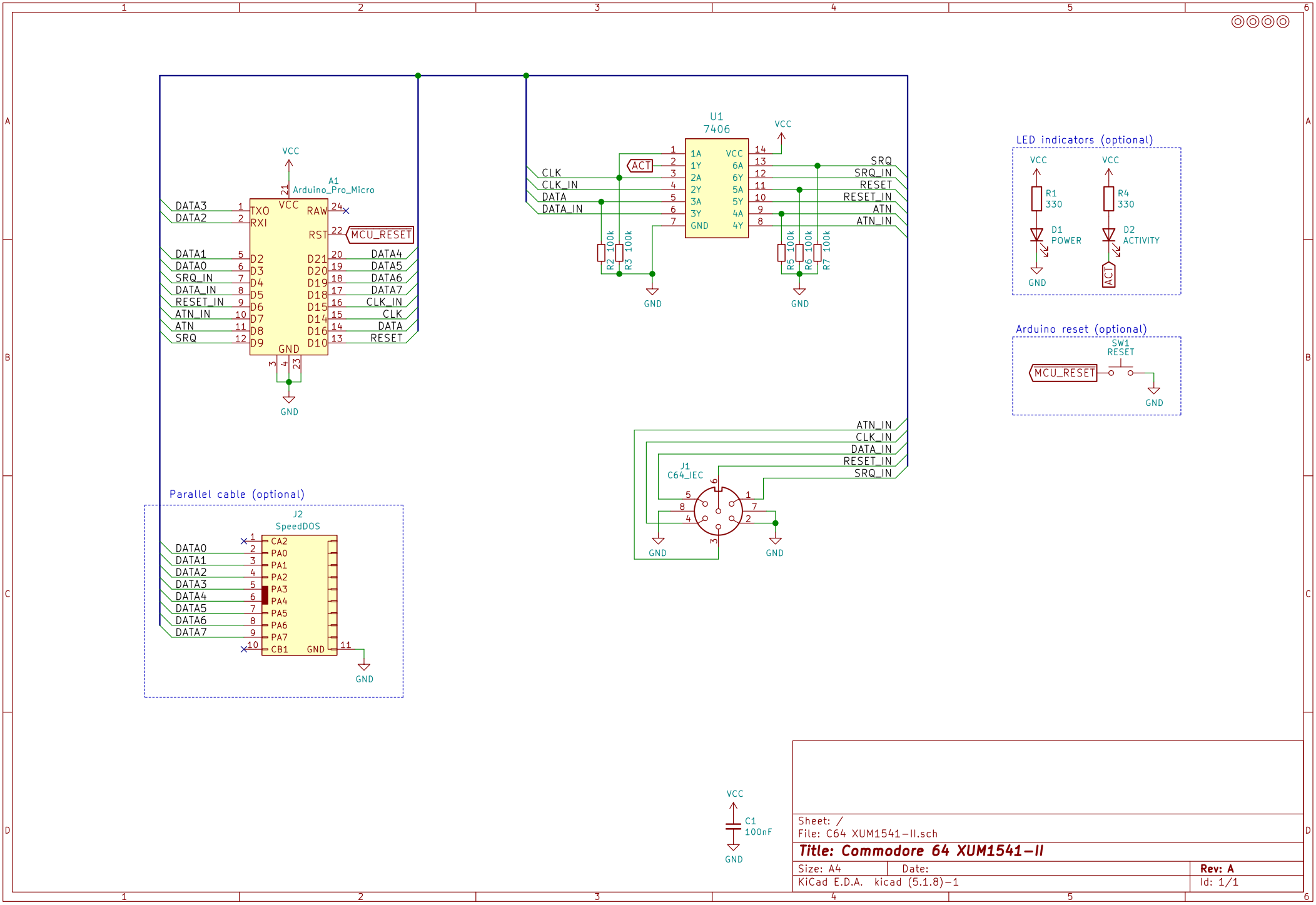

Sheet: /
File: C64 XUM1541-II.sch

Title: Commodore 64 XUM1541-II

Size: A4	Date:	Rev: A
KiCad E.D.A. kicad (5.1.8)-1		Id: 1/1