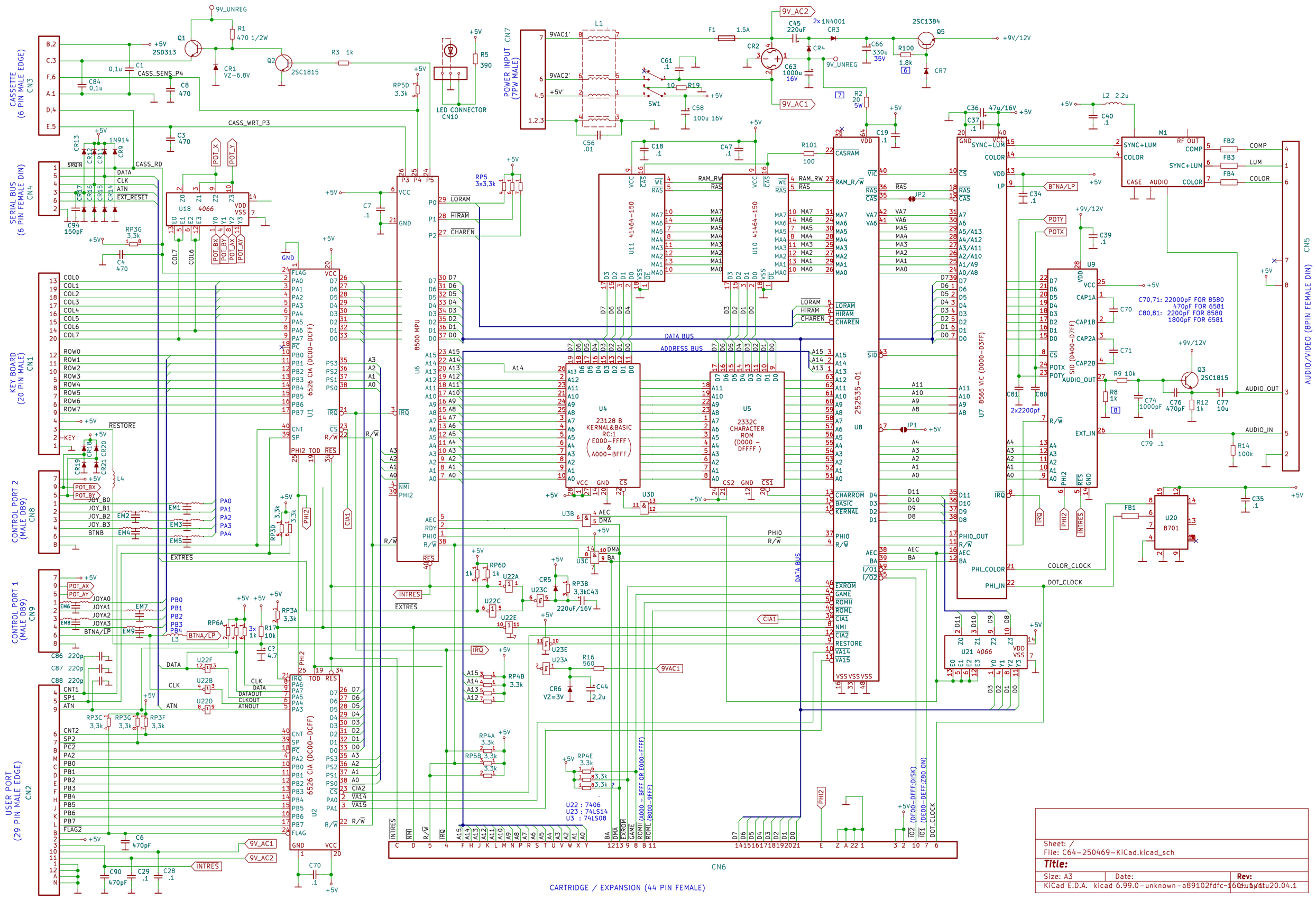


Sheet: /
File: C64-250469-KiCad.kicad_sch

**Title:**

| Size: A3 | Date: | Rev: |
|---|---|---|
| KiCad E.D.A. kicad 6.99.0-unknown-a89102fdfc-16~ubuntu20.04.1 | | |