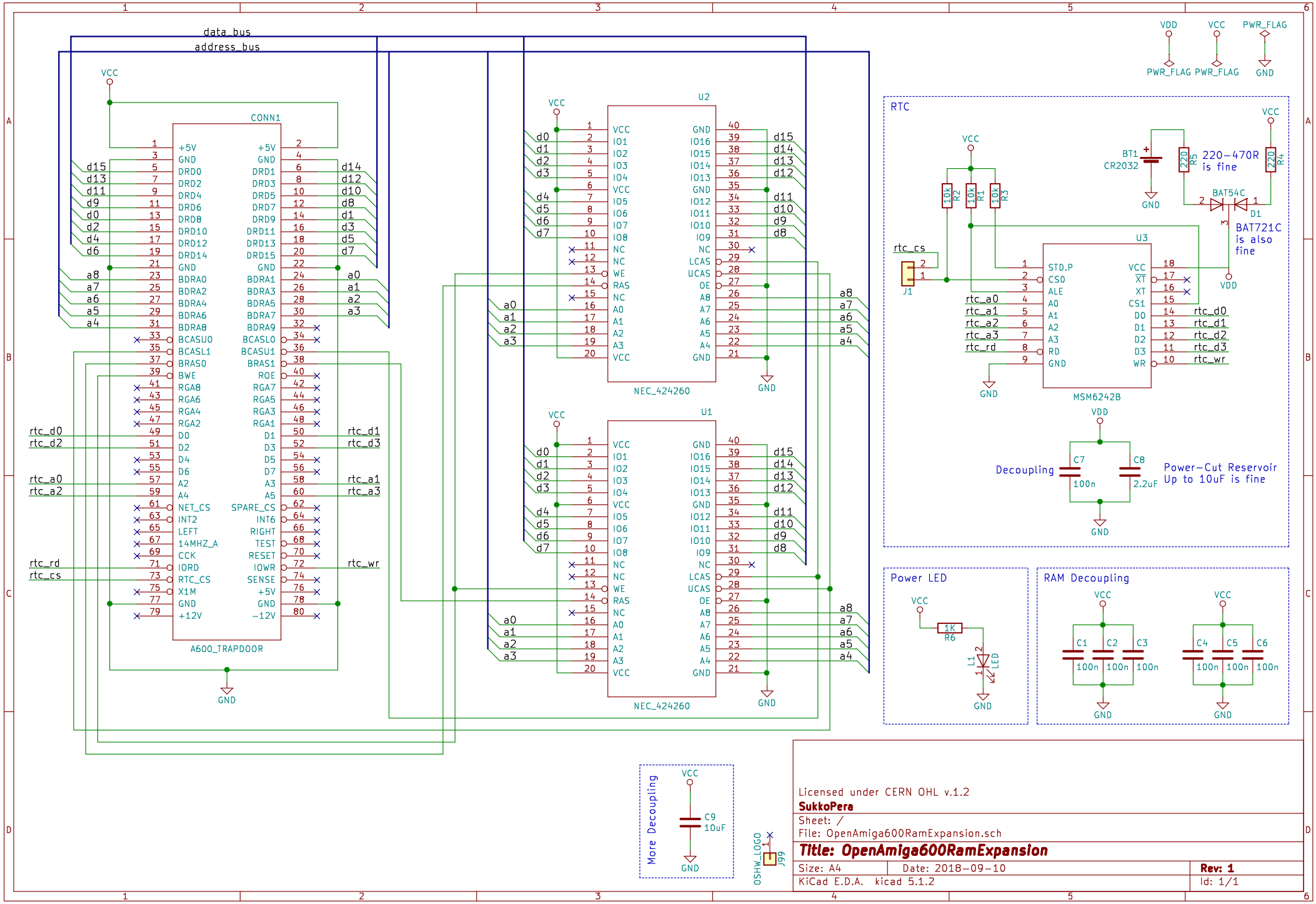
data_bus
address_bus
CONN1
A600_TRAPDOOR
U2
NEC_424260
U1
NEC_424260
RTC
BT1
CR2032
220-470R
is fine
BAT54C
BAT721C
is also
fine
U3
MSM6242B
J1
Decoupling
Power-Cut Reservoir
Up to 10uF is fine
Power LED
RAM Decoupling
More Decoupling
OSHW_LOGO
Licensed under CERN OHL v.1.2
SukkoPera
Sheet: /
File: OpenAmiga600RamExpansion.sch
Title: OpenAmiga600RamExpansion
Size: A4
Date: 2018-09-10
Rev: 1
KiCad E.D.A. kicad 5.1.2
Id: 1/1