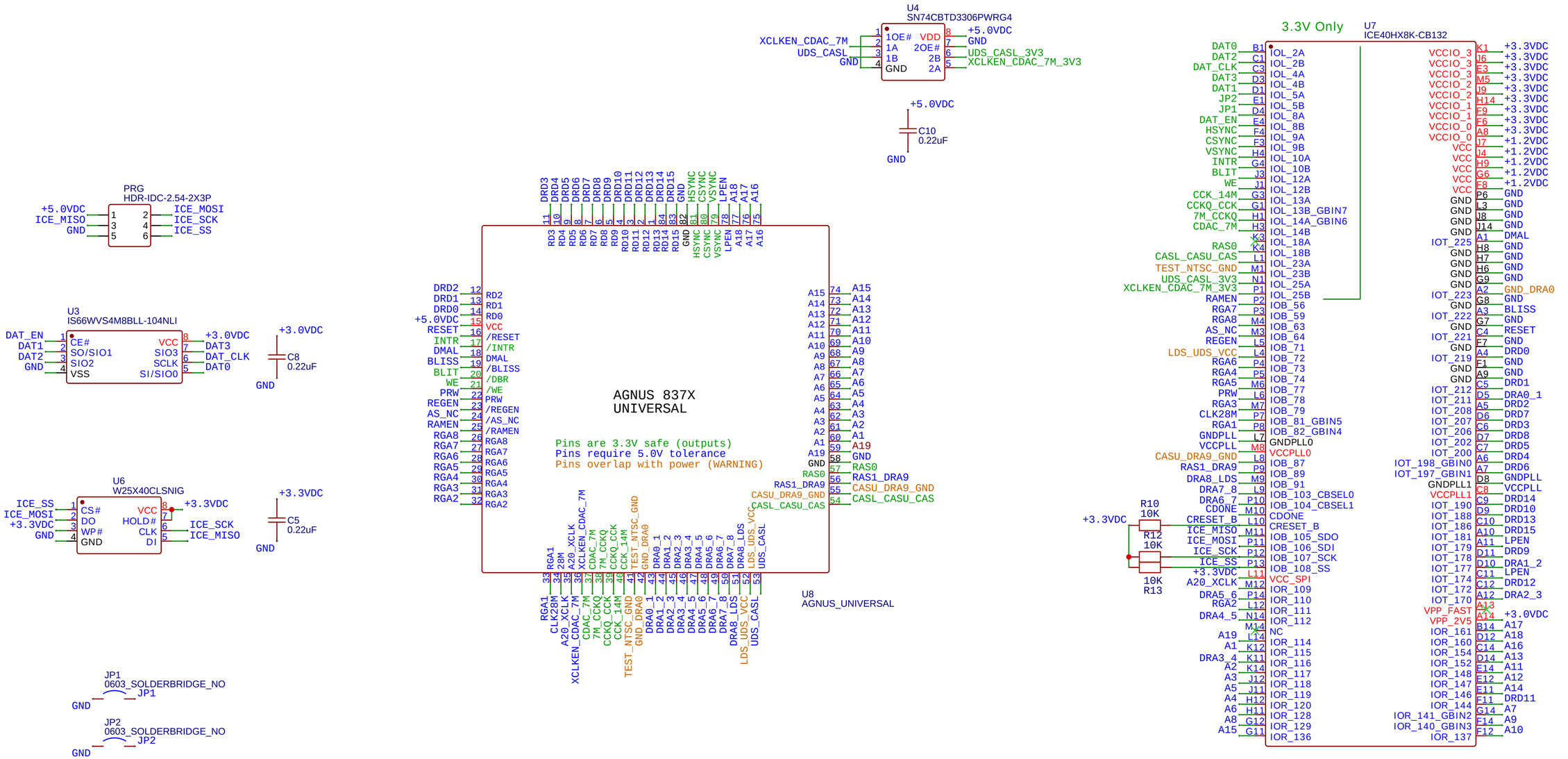

TITLE: ReAgnus	REV: 0.7
Company: the Buffee Project	Sheet: 1/1
Date: 2022-05-07 Drawn By: Renee	