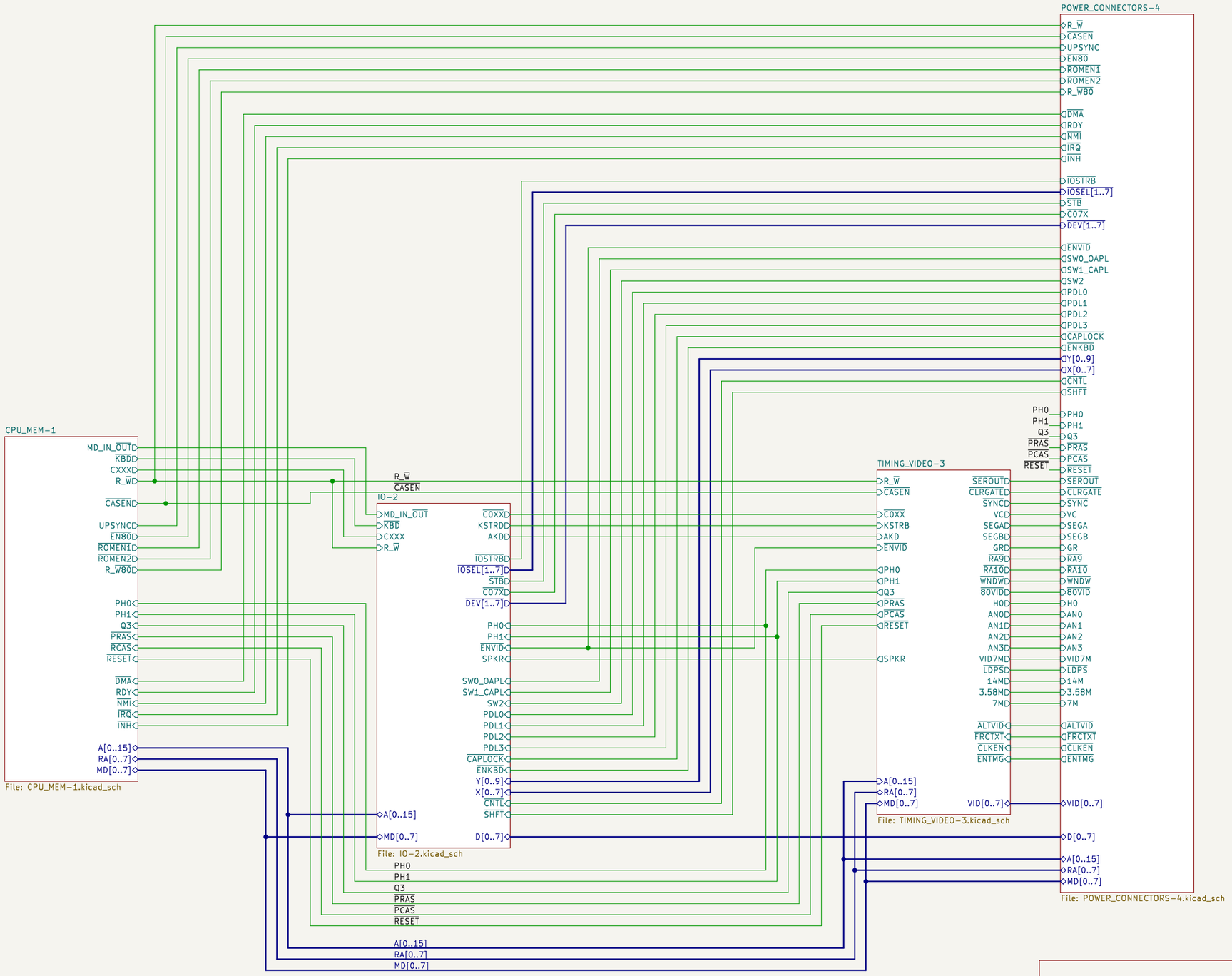

Sheet: /
File: Apple IIe (NTSC) - 050-0051-D.kicad_sch

Title: Apple IIe Computer (NTSC) 050-0051-D

Size: A3	Date:	Rev: 2
KiCad E.D.A. kicad 7.0.7		Id: 1/5

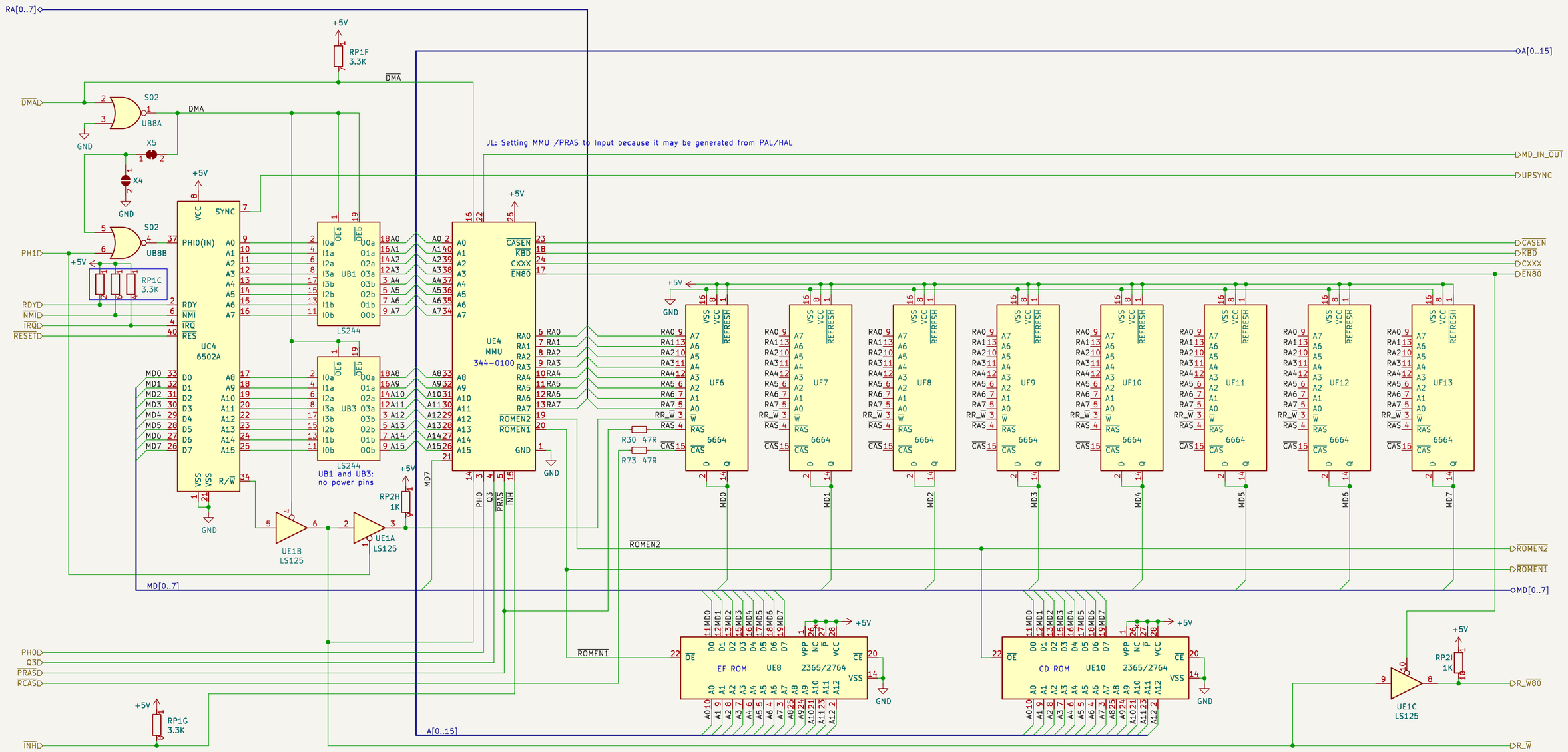

Sheet: /CPU_MEM-1/
File: CPU_MEM-1.kicad_sch

Title: CPU/MEM A2E NTSC

Size: A3	Date:	Rev:
KiCad E.D.A. kicad 7.0.7		Id: 2/5

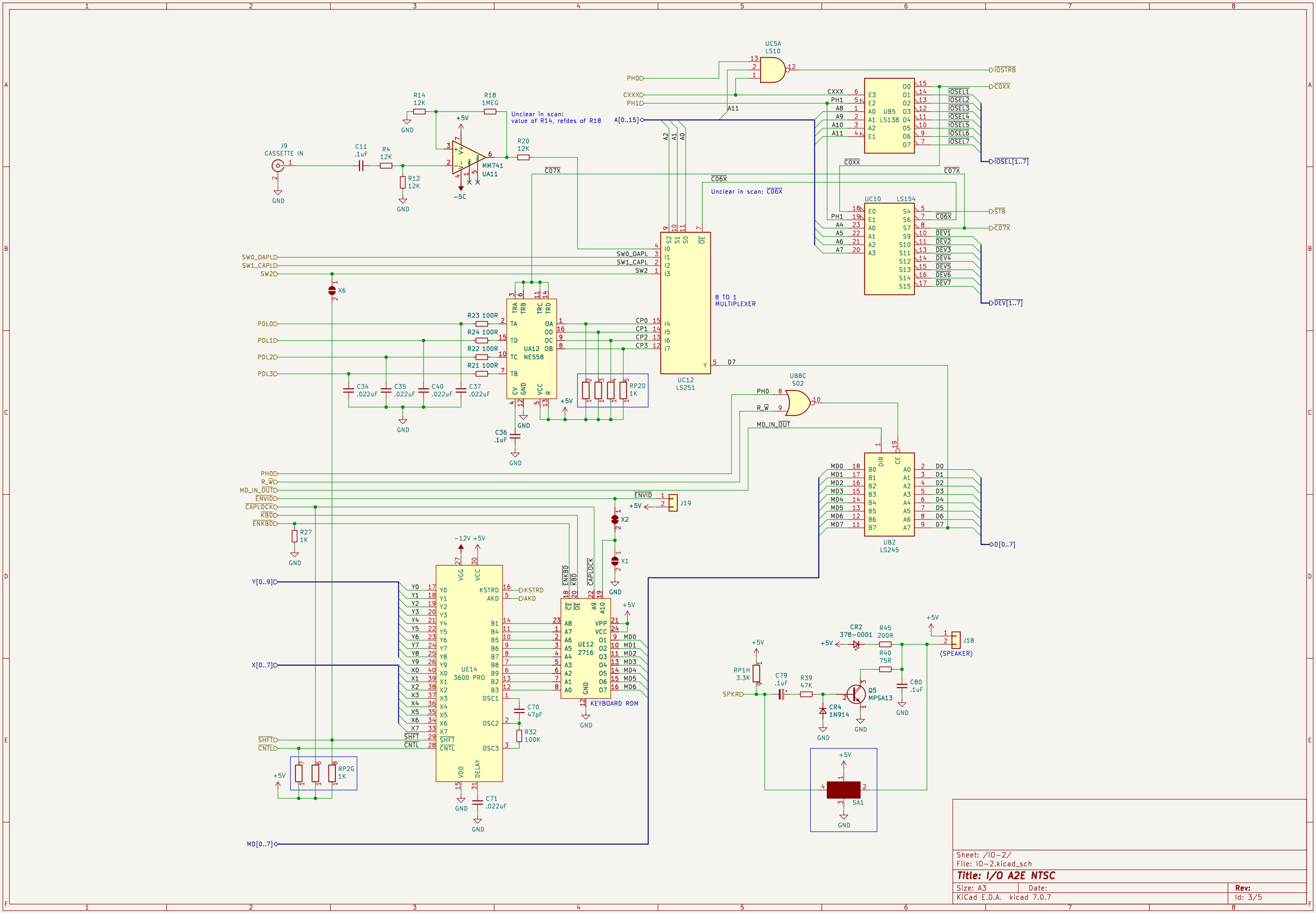
UC5A
LS10
PH0
CXXX
PH1
A[0..15]
A11
IOSTRB
COXX
IOSEL1
IOSEL2
IOSEL3
IOSEL4
IOSEL5
IOSEL6
IOSEL7
IOSEL[1..7]
UB5
LS138
R14
12K
R18
1MEG
Unclear in scan:
value of R14, refdes of R18
+5V
GND
J9
CASSETTE IN
C11
.1uF
R4
12K
R12
12K
MM741
UA11
-5C
R20
12K
C07X
C06X
Unclear in scan: C06X
UC10
LS154
STB
DEV1
DEV2
DEV3
DEV4
DEV5
DEV6
DEV7
DEV[1..7]
SW0_OAPL
SW1_CAPL
SW2
X6
8 TO 1
MULTIPLEXER
UC12
LS251
PDL0
PDL1
PDL2
PDL3
R23 100R
R24 100R
R22 100R
R21 100R
UA12
NE558
C34
.022uF
C35
.022uF
C40
.022uF
C37
.022uF
C36
.1uF
RP2D
1K
CP0
CP1
CP2
CP3
D7
UB8C
S02
R_W
MD_IN_OUT
UB2
LS245
D[0..7]
ENVID
CAPLOCK
KBD
ENKBD
R27
1K
J19
X2
X1
-12V
KSTRD
AKD
Y[0..9]
X[0..7]
SHFT
CNTL
RP2G
1K
UE14
3600 PRO
UE12
2716
KEYBOARD ROM
C70
47pF
R32
100K
C71
.022uF
MD[0..7]
RP1H
3.3K
SPKR
C79
.1uF
R39
47K
CR4
1N914
CR2
378-0001
R45
200R
R40
75R
Q5
MPSA13
C80
.1uF
J18
(SPEAKER)
SA1
Sheet: /IO-2/
File: IO-2.kicad_sch
Title: I/O A2E NTSC
Size: A3
Date:
Rev:
KiCad E.D.A. kicad 7.0.7
Id: 3/5

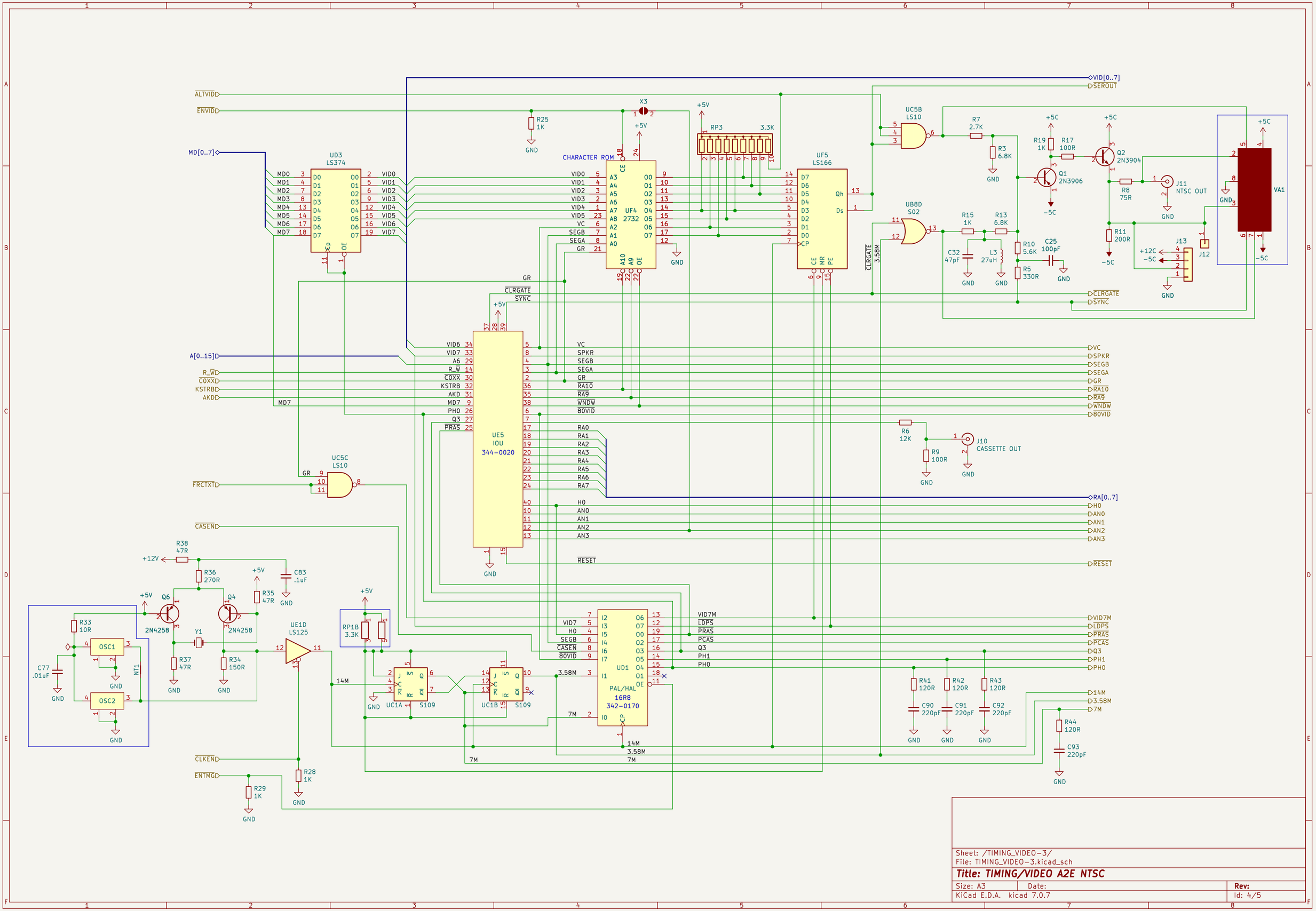

Sheet: /TIMING_VIDEO-3/
File: TIMING_VIDEO-3.kicad_sch

Title: TIMING/VIDEO A2E NTSC

Size: A3	Date:	Rev:
KiCad E.D.A. kicad 7.0.7		Id: 4/5

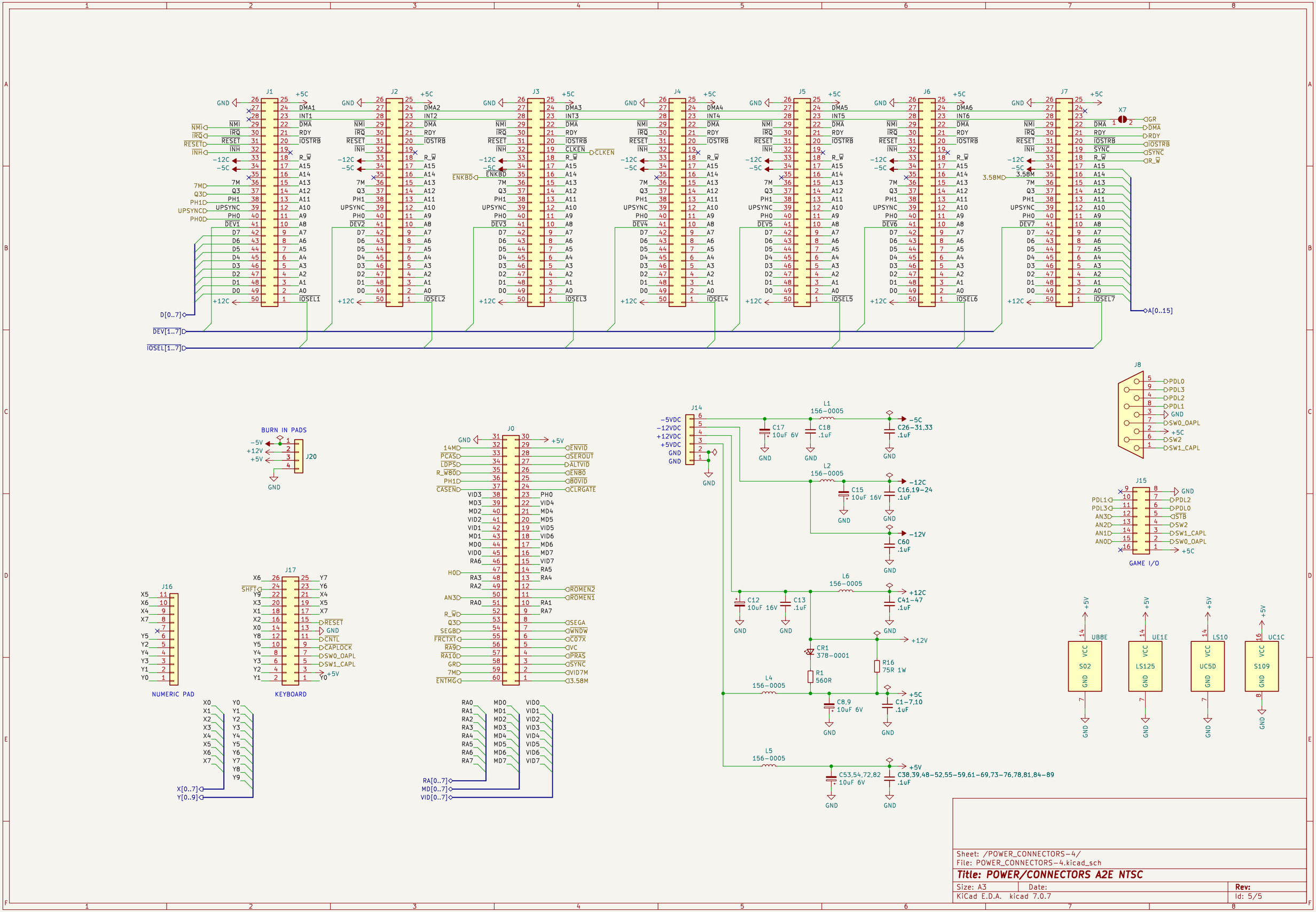

Sheet: /POWER_CONNECTORS-4/
File: POWER_CONNECTORS-4.kicad_sch

Title: POWER/CONNECTORS A2E NTSC

Size: A3	Date:	Rev:
KiCad E.D.A. kicad 7.0.7		Id: 5/5