processor
review 1 : ok
review 2 :
processor.sch

paula
review 1 :
review 2 :
paula.sch

serial
review 1 :
review 2 :
serial.sch

power
review 1 :
review 2 :
power.sch

chipram
review 1 :
review 2 :
chipram.sch

zorro
review 1 :
review 2 :
zorro.sch

pc slots
review 1 :
review 2 :
pc slots.sch

expansion logic
review 1 :
review 2 :
expansion logic.sch

agnus
review 1 :
review 2 :
agnus.sch

parallel
review 1 :
review 2 :
parallel.sch

denise
review 1 :
review 2 :
denise.sch

coprocessor slot
review 1 :
review 2 :
coprocessor slot.sch

Rev 6.3 fixes :
- Kickstart 2.03 and Denise 8373

Rev 6.4 fixes :
- Agnus 8375
- Instead of R101, add a capacitor (100nF) from right side of R101 to ground

Used on: A2000-CR
Drawn by: Dave Haynie
Commodore
Sheet: /
File: amiga2000.sch
Title:
Size: A4 | Date: 07/06/1987 | **Rev: 6.2-a**
KiCad E.D.A. kicad 5.1.2-f72e74a84ubuntu18.04.1 | Id: 1/13

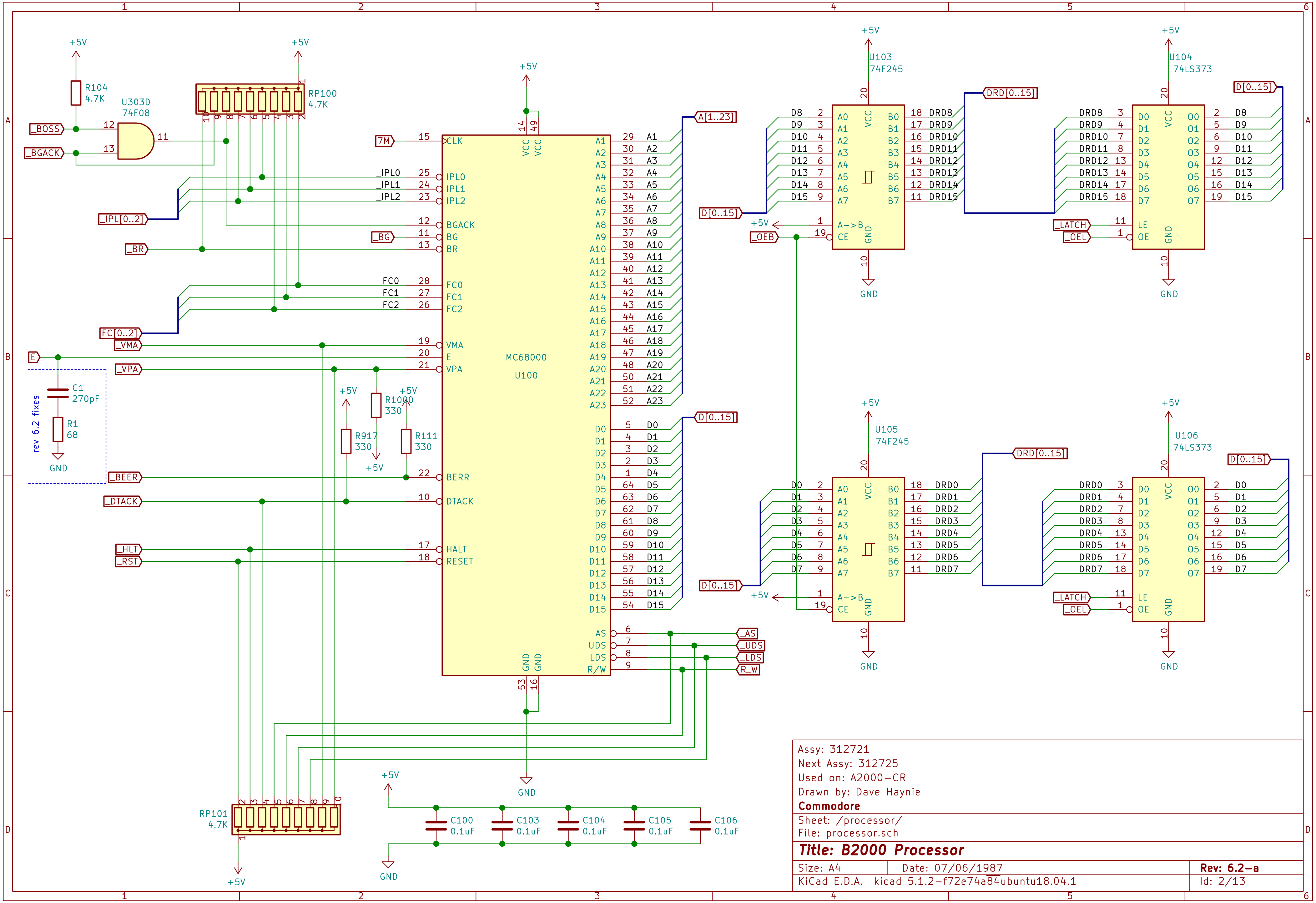
MC68000
U100
U303D
74F08
R104
4.7K
RP100
4.7K
RP101
4.7K
U103
74F245
U104
74LS373
U105
74F245
U106
74LS373
C1
270pF
R1
68
rev 6.2 fixes
R917
330
R1000
330
R111
330
C100
0.1uF
C103
0.1uF
C104
0.1uF
C105
0.1uF
C106
0.1uF
+5V
GND
_BOSS
_BGACK
_IPL[0..2]
_BR
_BG
7M
FC[0..2]
_VMA
E
_VPA
_BEER
_DTACK
_HLT
_RST
A[1..23]
D[0..15]
DRD[0..15]
_OEB
_LATCH
_OEL
_AS
_UDS
_LDS
R_W
CLK
IPL0
IPL1
IPL2
BGACK
BG
BR
FC0
FC1
FC2
VMA
VPA
BERR
DTACK
HALT
RESET
VCC
GND
AS
UDS
LDS
R/W
A->B
CE
LE
OE

Assy: 312721
Next Assy: 312725
Used on: A2000−CR
Drawn by: Dave Haynie
Commodore

Sheet: /processor/
File: processor.sch

Title: B2000 Processor

Size: A4
Date: 07/06/1987
Rev: 6.2−a
KiCad E.D.A. kicad 5.1.2−f72e74a84ubuntu18.04.1
Id: 2/13

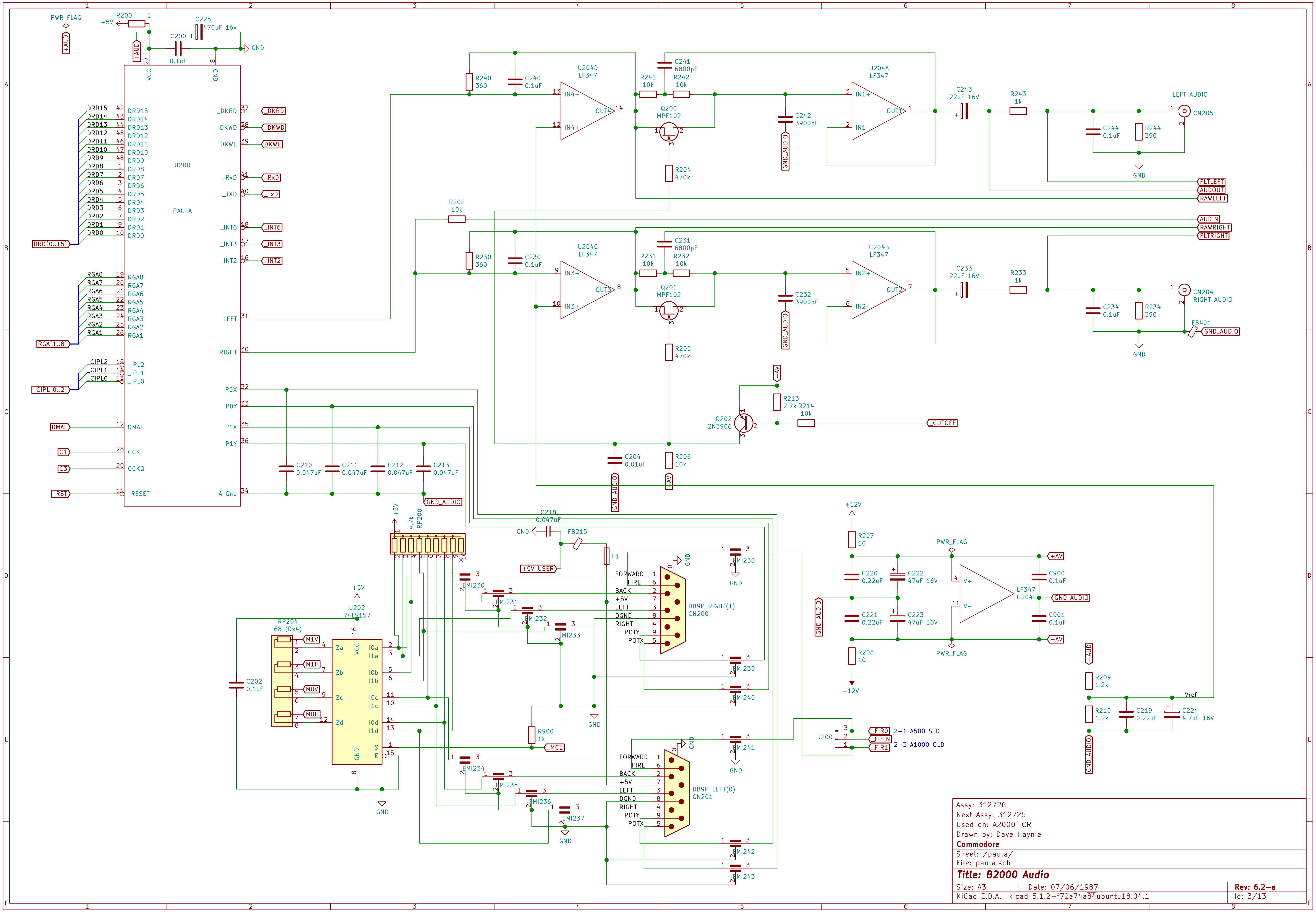
PWR_FLAG
+AUD
R200
+5V
C225
470uF 16v
C200
0.1uF
GND
VCC
U200
PAULA
DRD15 DRD14 DRD13 DRD12 DRD11 DRD10 DRD9 DRD8 DRD7 DRD6 DRD5 DRD4 DRD3 DRD2 DRD1 DRD0
DRD[0..15]
RGA8 RGA7 RGA6 RGA5 RGA4 RGA3 RGA2 RGA1
RGA[1..8]
_CIPL2 _CIPL1 _CIPL0
_IPL2 _IPL1 _IPL0
_CIPL[0..2]
DMAL
C1
CCK
C3
CCKQ
_RST
_RESET
_DKRD
_DKWD
DKWE
_RxD
_TxD
_INT6
_INT3
_INT2
LEFT
RIGHT
P0X
P0Y
P1X
P1Y
A_Gnd
GND_AUDIO
C210 0.047uF
C211 0.047uF
C212 0.047uF
C213 0.047uF
R240 360
C240 0.1uF
U204D LF347
IN4− IN4+ OUT4
R241 10k
C241 6800pF
R242 10k
Q200 MPF102
R204 470k
C242 3900pF
U204A LF347
IN1+ IN1− OUT1
C243 22uF 16V
R243 1k
LEFT AUDIO
CN205
C244 0.1uF
R244 390
FLTLEFT
AUDOUT
RAWLEFT
R202 10k
AUDIN
RAWRIGHT
FLTRIGHT
R230 360
C230 0.1uF
U204C LF347
IN3− IN3+ OUT3
R231 10k
C231 6800pF
R232 10k
Q201 MPF102
R205 470k
C232 3900pF
U204B LF347
IN2+ IN2− OUT2
C233 22uF 16V
R233 1k
CN204
RIGHT AUDIO
C234 0.1uF
R234 390
FB401
+AV
R213 2.7k
R214 10k
Q202 2N3906
_CUTOFF
C204 0.01uF
R206 10k
−AV
+5V
4.7k
RP200
C218 0.047uF
FB215
+5V_USER
F1
EMI230 EMI231 EMI232 EMI233
EMI238 EMI239 EMI240
FORWARD FIRE BACK +5V LEFT DGND RIGHT POTY POTX
DB9P RIGHT(1)
CN200
U202
74LS157
RP204
68 (Dx4)
M1V M1H M0V M0H
Za Zb Zc Zd
I0a I1a I0b I1b I0c I1c I0d I1d
S E
C202 0.1uF
R900 1k
_MC1
EMI234 EMI235 EMI236 EMI237
EMI241 EMI242 EMI243
DB9P LEFT(0)
CN201
+12V
R207 10
C220 0.22uF
C222 47uF 16V
C221 0.22uF
C223 47uF 16V
R208 10
−12V
V+ V−
LF347
U204E
C900 0.1uF
C901 0.1uF
J200
_FIR0
_LPEN
_FIR1
2−1 A500 STD
2−3 A1000 OLD
R209 1.2k
R210 1.2k
C219 0.22uF
C224 4.7uF 16V
Vref

Assy: 312726
Next Assy: 312725
Used on: A2000−CR
Drawn by: Dave Haynie
Commodore
Sheet: /paula/
File: paula.sch

Title: B2000 Audio

Size: A3 Date: 07/06/1987 **Rev: 6.2−a**
KiCad E.D.A. kicad 5.1.2−f72e74a84ubuntu18.04.1 Id: 3/13

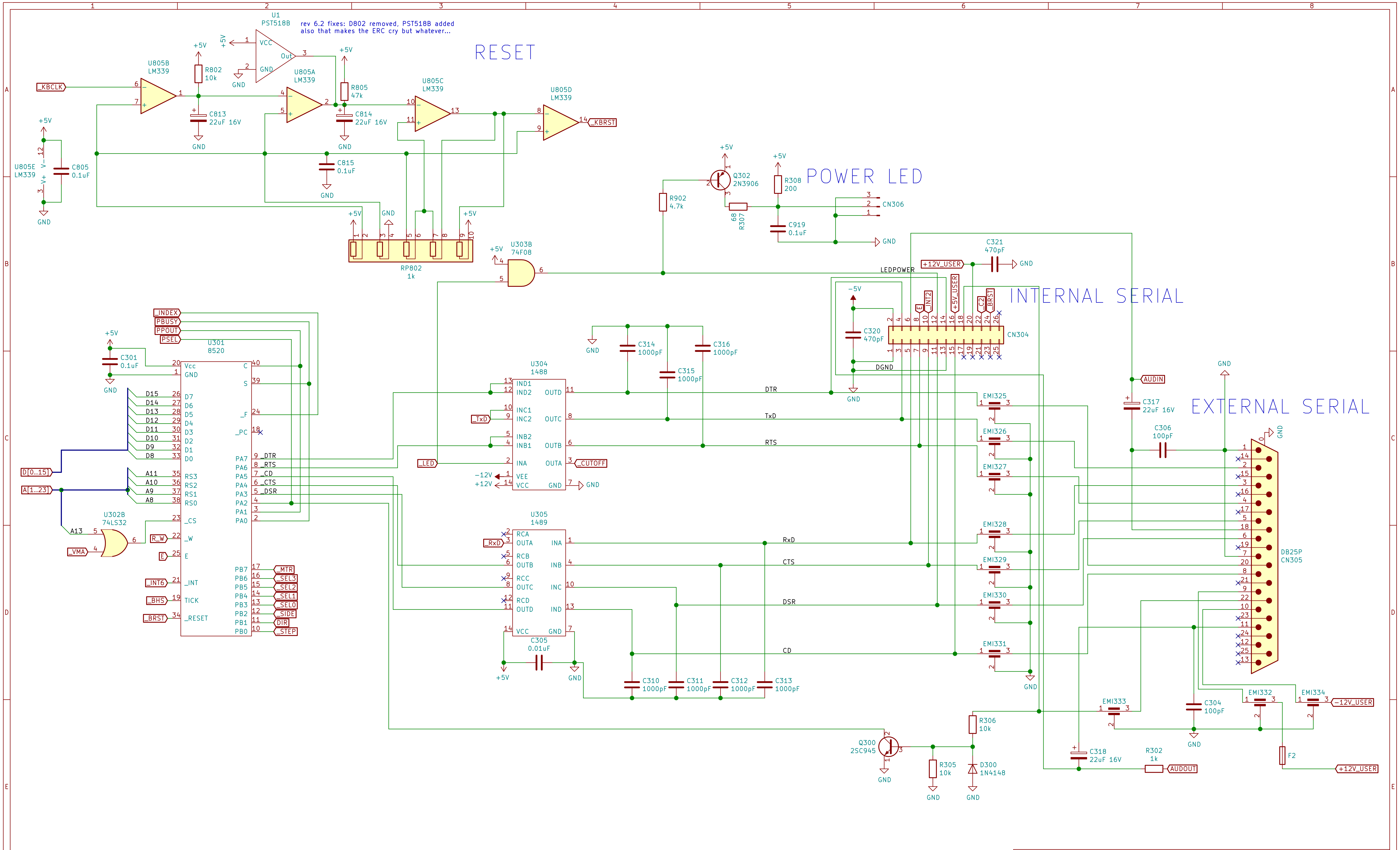
RESET
POWER LED
INTERNAL SERIAL
EXTERNAL SERIAL
U1 PST518B
VCC
Out
GND
U805B LM339
U805A LM339
U805C LM339
U805D LM339
U805E LM339
_KBCLK
_KBRST
R802 10k
C813 22uF 16V
R805 47k
C814 22uF 16V
C815 0.1uF
C805 0.1uF
RP802 1k
U303B 74F08
Q302 2N3906
R902 4.7k
R308 200
R307 68
C919 0.1uF
CN306
C321 470pF
+12V_USER
LEDPOWER
-5V
C320 470pF
CN304
DGND
+5V_USER
INT2
BRST
C2
E
_INDEX
PBUSY
PPOUT
PSEL
U301 8520
C301 0.1uF
D15
D14
D13
D12
D11
D10
D9
D8
D[0..15]
A[1..23]
A11
A10
A9
A8
A13
U302B 74LS32
_VMA
R_W
_INT6
_BHS
_BRST
_DTR
_RTS
_CD
_CTS
_DSR
_MTR
_SEL3
_SEL2
_SEL1
_SEL0
_SIDE
DIR
_STEP
U304 1488
_TxD
_LED
_CUTOFF
-12V
+12V
C314 1000pF
C315 1000pF
C316 1000pF
DTR
TxD
RTS
U305 1489
_RxD
RxD
CTS
DSR
CD
C305 0.01uF
C310 1000pF
C311 1000pF
C312 1000pF
C313 1000pF
EMI325
EMI326
EMI327
EMI328
EMI329
EMI330
EMI331
EMI332
EMI333
EMI334
AUDIN
C317 22uF 16V
C306 100pF
DB25P CN305
C304 100pF
-12V_USER
F2
R302 1k
AUDOUT
C318 22uF 16V
R306 10k
D300 1N4148
R305 10k
Q300 2SC945
+5V
GND

rev 6.2 fixes: D802 removed, PST518B added
also that makes the ERC cry but whatever...

Assy: 312726
Next Assy: 312725
Used on: A2000-CR
Drawn by: Dave Haynie
Commodore
Sheet: /serial/
File: serial.sch
Title: B2000 Serial and Reset
Size: A3 Date: 07/06/1987 **Rev: 6.2-a**
KiCad E.D.A. kicad 5.1.2-f72e74a84ubuntu18.04.1 Id: 4/13

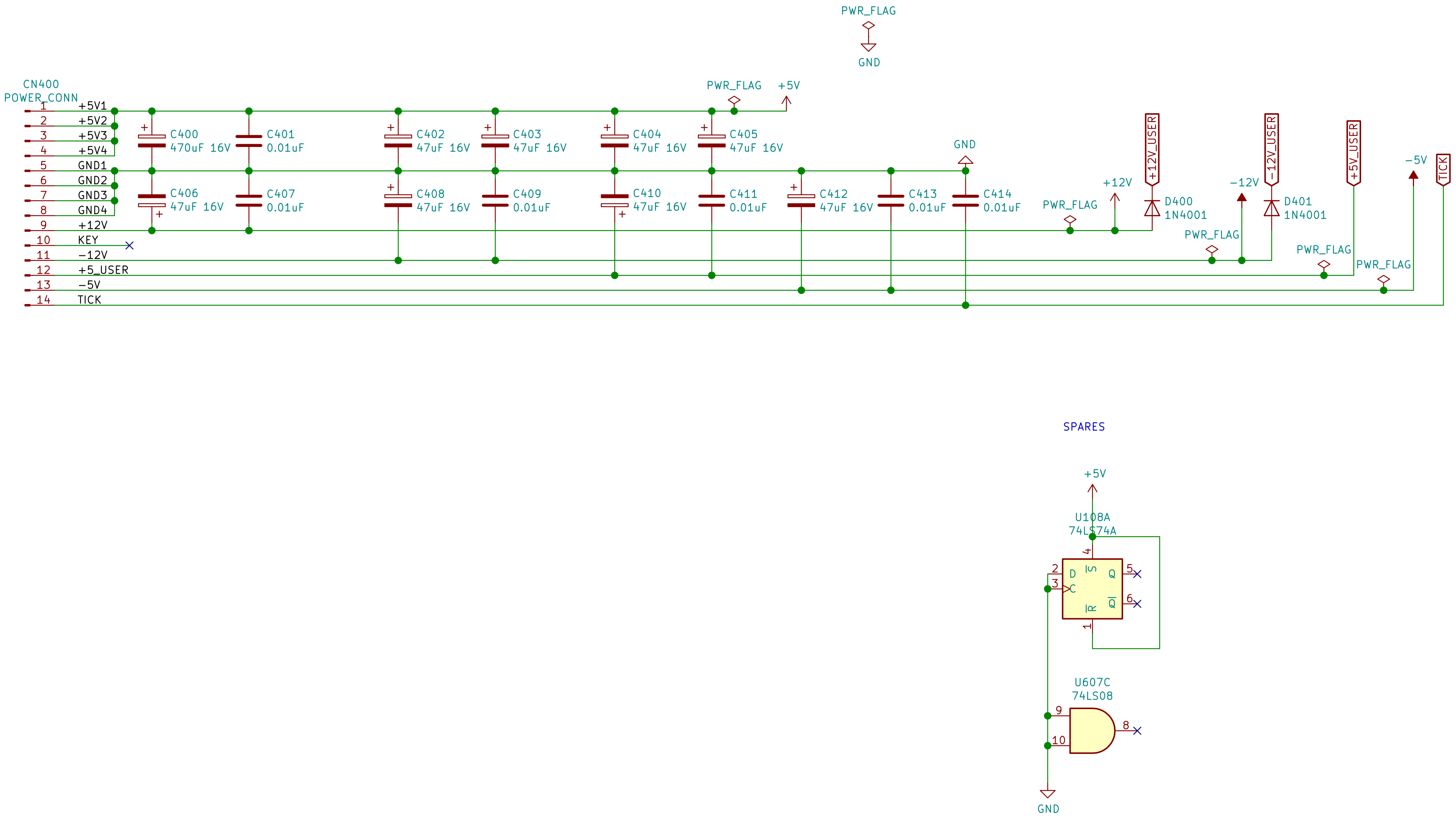
PWR_FLAG
GND
CN400
POWER_CONN
1 +5V1
2 +5V2
3 +5V3
4 +5V4
5 GND1
6 GND2
7 GND3
8 GND4
9 +12V
10 KEY
11 −12V
12 +5_USER
13 −5V
14 TICK
C400 470uF 16V
C401 0.01uF
C402 47uF 16V
C403 47uF 16V
C404 47uF 16V
C405 47uF 16V
C406 47uF 16V
C407 0.01uF
C408 47uF 16V
C409 0.01uF
C410 47uF 16V
C411 0.01uF
C412 47uF 16V
C413 0.01uF
C414 0.01uF
PWR_FLAG
+5V
GND
+12V_USER
−12V_USER
+5V_USER
TICK
+12V
−12V
−5V
D400 1N4001
D401 1N4001
PWR_FLAG
PWR_FLAG
PWR_FLAG
PWR_FLAG
SPARES
+5V
U108A
74LS74A
D
C
S
R
Q
Q
2
3
4
1
5
6
U607C
74LS08
9
10
8
GND

Assy: 312726
Next Assy: 312725
Used on: A2000−CR
Drawn by: Dave Haynie
Commodore

Sheet: /power/
File: power.sch

Title: B2000 Power

Size: A4	Date: 07/06/1987	**Rev: 6.2−a**
KiCad E.D.A.	kicad 5.1.2−f72e74a84ubuntu18.04.1	Id: 5/13

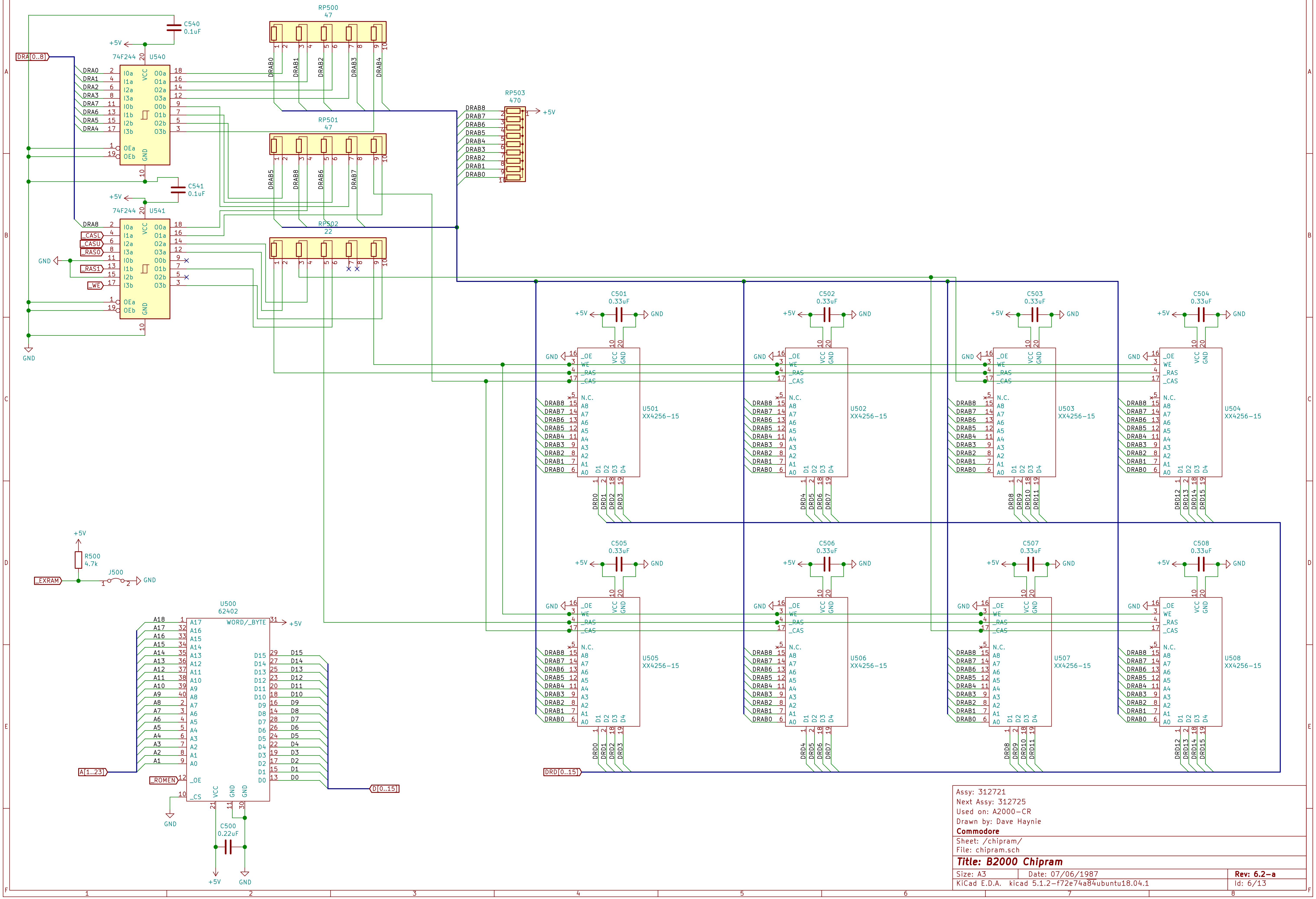
RP500 47
RP501 47
RP502 22
RP503 470
C540 0.1uF
C541 0.1uF
74F244 U540
74F244 U541
DRA[0..8]
DRA0
DRA1
DRA2
DRA3
DRA7
DRA6
DRA5
DRA4
DRA8
_CASL
_CASU
_RAS0
_RAS1
_WE
DRAB0
DRAB1
DRAB2
DRAB3
DRAB4
DRAB5
DRAB6
DRAB7
DRAB8
+5V
GND
C501 0.33uF
C502 0.33uF
C503 0.33uF
C504 0.33uF
C505 0.33uF
C506 0.33uF
C507 0.33uF
C508 0.33uF
U501 XX4256-15
U502 XX4256-15
U503 XX4256-15
U504 XX4256-15
U505 XX4256-15
U506 XX4256-15
U507 XX4256-15
U508 XX4256-15
_OE
WE
_RAS
_CAS
N.C.
DRD[0..15]
R500 4.7k
J500
_EXRAM
U500 62402
WORD/_BYTE
A[1..23]
_ROMEN
_CS
D[0..15]
C500 0.22uF

Assy: 312721
Next Assy: 312725
Used on: A2000-CR
Drawn by: Dave Haynie
Commodore
Sheet: /chipram/
File: chipram.sch

Title: B2000 Chipram

Size: A3 Date: 07/06/1987 **Rev: 6.2-a**
KiCad E.D.A. kicad 5.1.2-f72e74a84ubuntu18.04.1 Id: 6/13

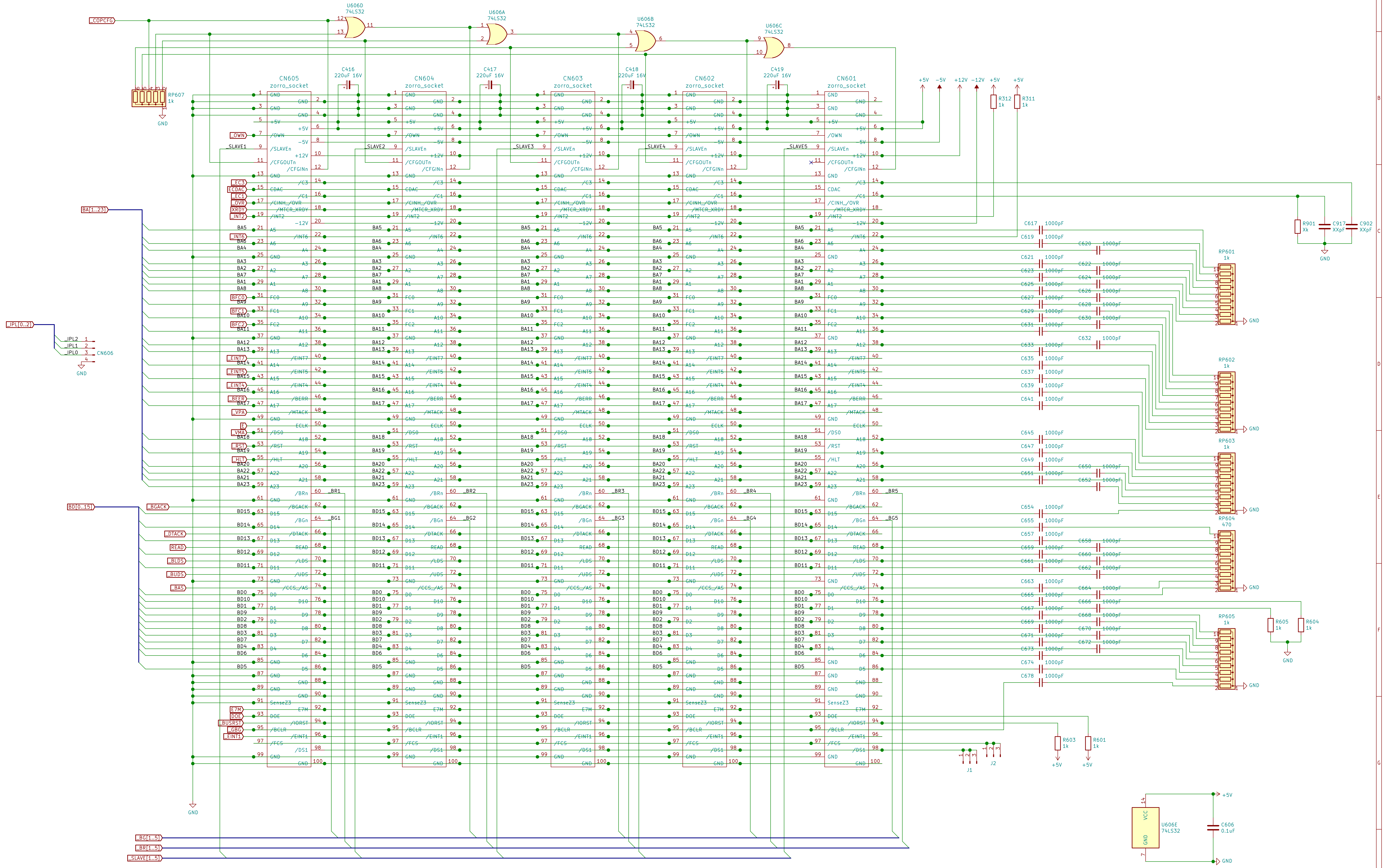
_COPCFG
U606D 74LS32
U606A 74LS32
U606B 74LS32
U606C 74LS32
RP607 1k
GND
CN605 zorro_socket
CN604 zorro_socket
CN603 zorro_socket
CN602 zorro_socket
CN601 zorro_socket
C416 220uF 16V
C417 220uF 16V
C418 220uF 16V
C419 220uF 16V
SLAVE1
SLAVE2
SLAVE3
SLAVE4
SLAVE5
_OWN
_EC3
ECDAC
_EC1
_OVR
XRDY
_INT2
_INT6
BA[1..23]
BFC0
BFC1
BFC2
_EINT7
_EINT5
_EINT4
_BERR
_VPA
E
_VMA
_RST
_HLT
_IPL[0..2]
IPL2
IPL1
IPL0
CN606
BD[0..15]
_BGACK
_DTACK
READ
_BLDS
_BUDS
_BAS
E7M
DOE
_BUSRST
GBG
_EINT1
_BR1
_BG1
_BR2
_BG2
_BR3
_BG3
_BR4
_BG4
_BR5
_BG5
_BG[1..5]
_BR[1..5]
_SLAVE[1..5]
+5V
-5V
+12V
-12V
R312 1k
R311 1k
R901 Xk
C917 XXpF
C902 XXpF
RP601 1k
RP602 1k
RP603 1k
RP604 470
RP605 1k
R605 1k
R604 1k
R603 1k
R601 1k
J1
J2
1000pF
U606E 74LS32
VCC
C606 0.1uF

Assy: 312721
Next Assy: 312725
Used on: A2000-CR
Drawn by: Dave Haynie
Commodore

Sheet: /zorro/
File: zorro.sch

Title:

Size: A2
Date: 07/06/1987
Rev: 6.2-a
KiCad E.D.A. kicad 5.1.2-f72e74a84ubuntu18.04.1
Id: 7/13

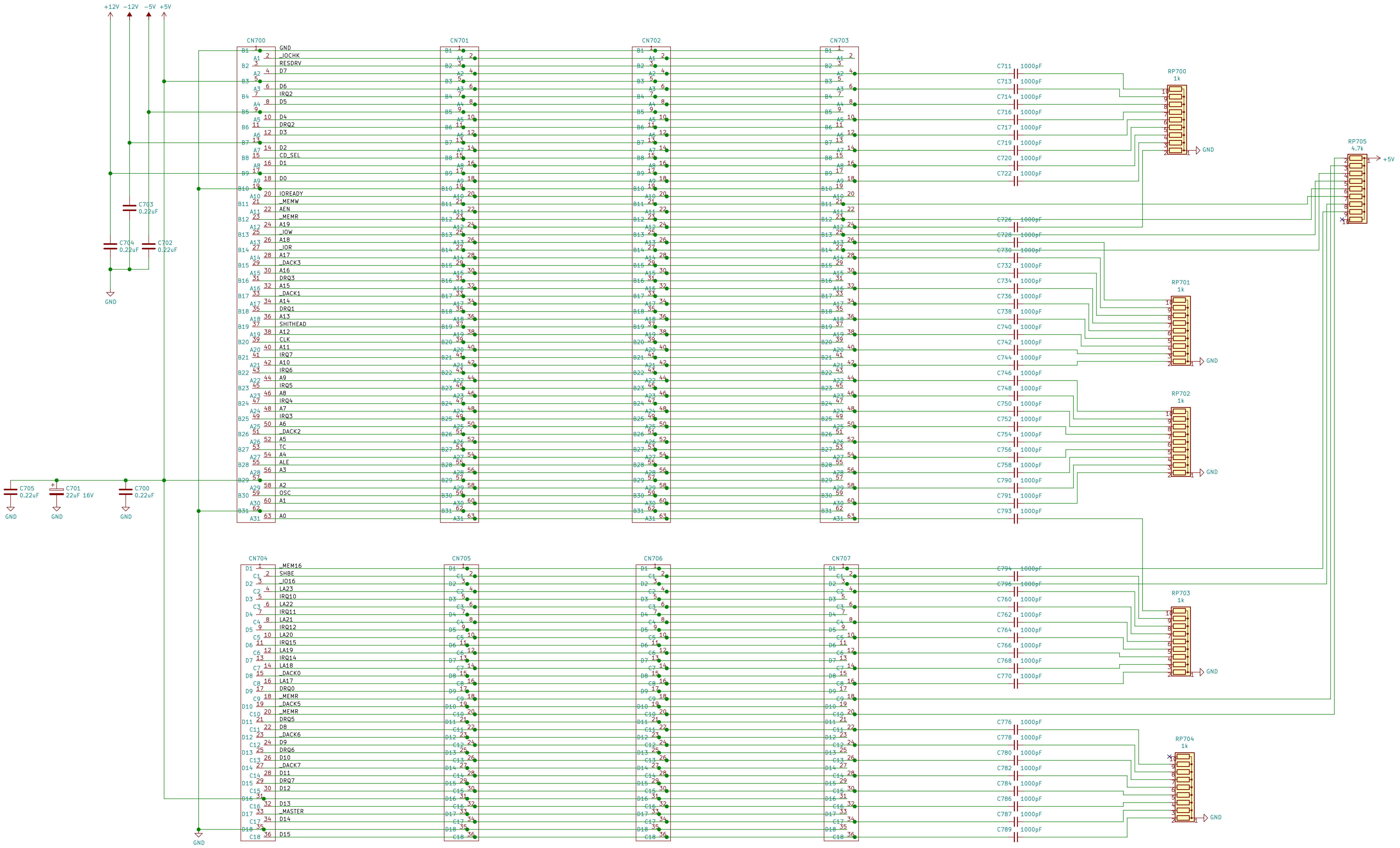
+12V
-12V
-5V
+5V
C703 0.22uF
C704 0.22uF
C702 0.22uF
GND
C705 0.22uF
C701 22uF 16V
C700 0.22uF
CN700
CN701
CN702
CN703
GND
_IOCHK
RESDRV
D7
D6
IRQ2
D5
D4
DRQ2
D3
D2
CD_SEL
D1
D0
IOREADY
_MEMW
AEN
_MEMR
A19
_IOW
A18
_IOR
A17
_DACK3
A16
DRQ3
A15
_DACK1
A14
DRQ1
A13
SHITHEAD
A12
CLK
A11
IRQ7
A10
IRQ6
A9
IRQ5
A8
IRQ4
A7
IRQ3
A6
_DACK2
A5
TC
A4
ALE
A3
A2
OSC
A1
A0
CN704
CN705
CN706
CN707
_MEM16
SHBE
_IO16
LA23
IRQ10
LA22
IRQ11
LA21
IRQ12
LA20
IRQ15
LA19
IRQ14
LA18
_DACK0
LA17
DRQ0
_MEMR
_DACK5
_MEMR
DRQ5
D8
_DACK6
D9
DRQ6
D10
_DACK7
D11
DRQ7
D12
D13
_MASTER
D14
D15
C711 1000pF
C713 1000pF
C714 1000pF
C716 1000pF
C717 1000pF
C719 1000pF
C720 1000pF
C722 1000pF
C726 1000pF
C728 1000pF
C730 1000pF
C732 1000pF
C734 1000pF
C736 1000pF
C738 1000pF
C740 1000pF
C742 1000pF
C744 1000pF
C746 1000pF
C748 1000pF
C750 1000pF
C752 1000pF
C754 1000pF
C756 1000pF
C758 1000pF
C790 1000pF
C791 1000pF
C793 1000pF
C794 1000pF
C796 1000pF
C760 1000pF
C762 1000pF
C764 1000pF
C766 1000pF
C768 1000pF
C770 1000pF
C776 1000pF
C778 1000pF
C780 1000pF
C782 1000pF
C784 1000pF
C786 1000pF
C787 1000pF
C789 1000pF
RP700 1k
RP701 1k
RP702 1k
RP703 1k
RP704 1k
RP705 4.7k
+5V
GND

Note: R6 PCB – C789 is noted C788 and connected to _MASTER instead of D15

Assy: 312721
Next Assy: 312725
Used on: A2000–CR
Drawn by: Dave Haynie
Commodore

Sheet: /pc slots/
File: pc slots.sch

Title:

Size: A2
Date: 07/06/1987
Rev: 6.2–a
KiCad E.D.A. kicad 5.1.2–f72e74a84ubuntu18.04.1
Id: 8/13

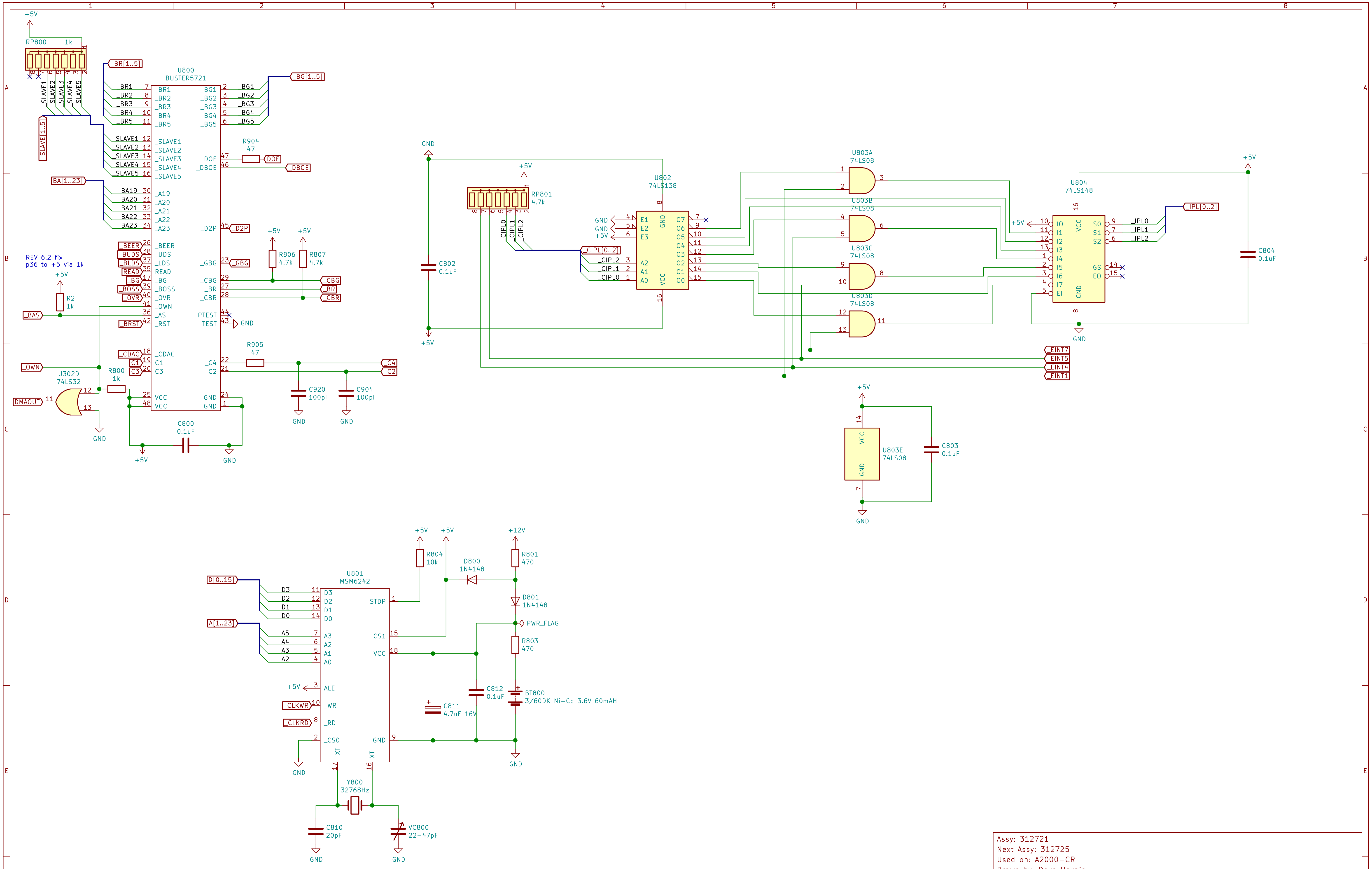
+5V
RP800 1k
_SLAVE1
_SLAVE2
_SLAVE3
_SLAVE4
_SLAVE5
_SLAVE[1..5]
_BR[1..5]
U800
BUSTER5721
_BR1
_BR2
_BR3
_BR4
_BR5
_SLAVE1
_SLAVE2
_SLAVE3
_SLAVE4
_SLAVE5
BA[1..23]
BA19
BA20
BA21
BA22
BA23
_A19
_A20
_A21
_A22
_A23
_BEER
_BUDS
_BLDS
READ
_BG
_BOSS
_OVR
_OWN
_AS
_RST
_BAS
_BRST
_UDS
_LDS
_CDAC
C1
C3
VCC
GND
_BG1
_BG2
_BG3
_BG4
_BG5
_BG[1..5]
R904
47
DOE
_DBOE
_D2P
_GBG
_CBG
_BR
_CBR
PTEST
TEST
_C4
_C2
R905
47
C920
100pF
C904
100pF
R806
4.7k
R807
4.7k
REV 6.2 fix
p36 to +5 via 1k
R2
1k
_OWN
U302D
74LS32
DMAOUT
R800
1k
C800
0.1uF
GND
GND
C802
0.1uF
RP801
4.7k
_CIPL0
_CIPL1
_CIPL2
_CIPL[0..2]
U802
74LS138
E1
E2
E3
A2
A1
A0
O7
O6
O5
O4
O3
O2
O1
O0
U803A
74LS08
U803B
74LS08
U803C
74LS08
U803D
74LS08
U804
74LS148
I0
I1
I2
I3
I4
I5
I6
I7
EI
S0
S1
S2
GS
EO
_IPL0
_IPL1
_IPL2
_IPL[0..2]
C804
0.1uF
_EINT7
_EINT5
_EINT4
_EINT1
U803E
74LS08
C803
0.1uF
D[0..15]
A[1..23]
D3
D2
D1
D0
A5
A4
A3
A2
U801
MSM6242
STDP
CS1
ALE
_WR
_RD
_CS0
_XT
XT
_CLKWR
_CLKRD
R804
10k
D800
1N4148
+12V
R801
470
D801
1N4148
PWR_FLAG
R803
470
C812
0.1uF
C811
4.7uF 16V
BT800
3/60DK Ni-Cd 3.6V 60mAH
Y800
32768Hz
C810
20pF
VC800
22-47pF

Assy: 312721
Next Assy: 312725
Used on: A2000-CR
Drawn by: Dave Haynie
Commodore

Sheet: /expansion logic/
File: expansion logic.sch

Title:

Size: A3 | Date: 07/06/1987 | **Rev: 6.2-a**
KiCad E.D.A. kicad 5.1.2-f72e74a84ubuntu18.04.1 | Id: 9/13

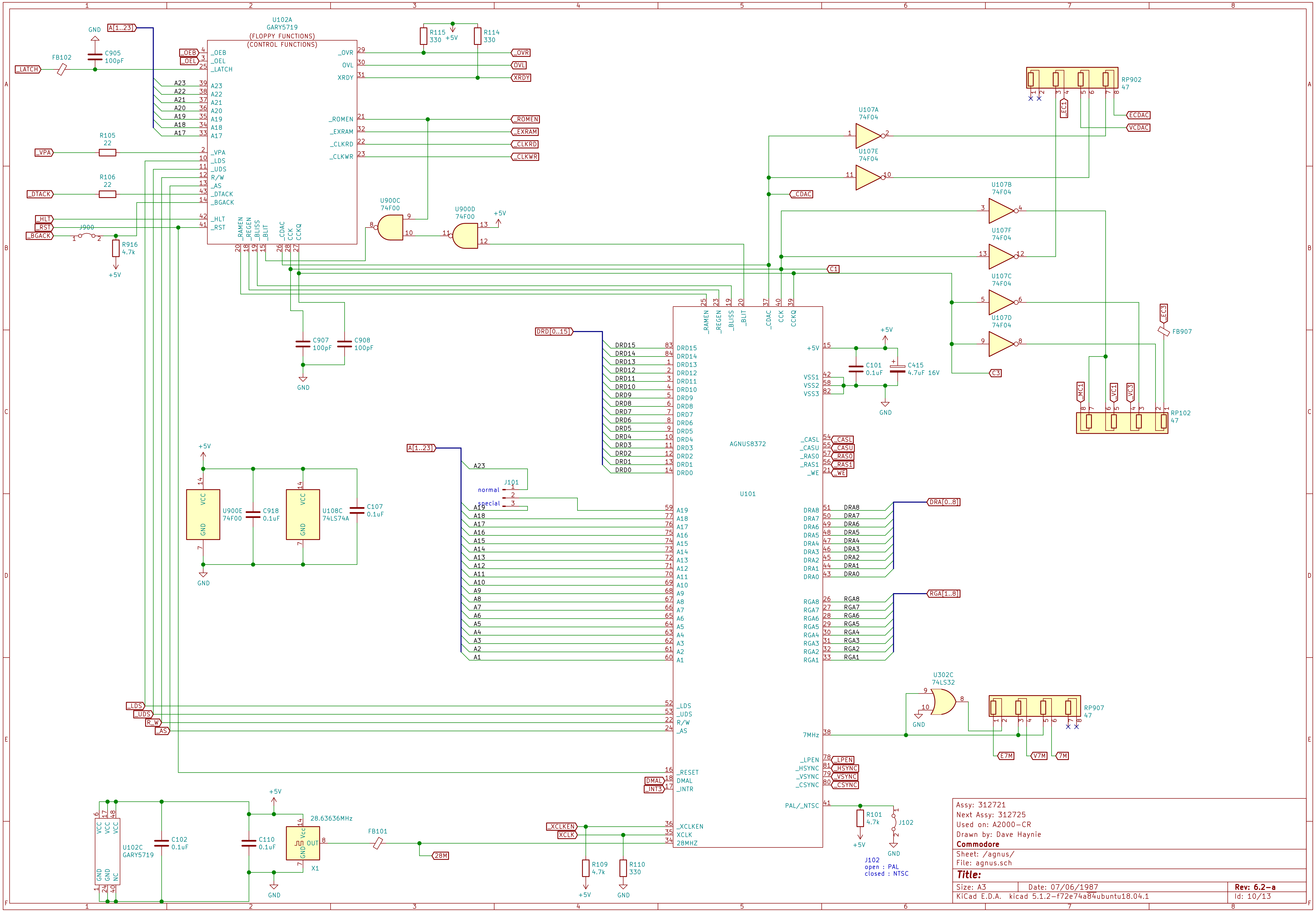
U102A
GARY5719
(FLOPPY FUNCTIONS)
(CONTROL FUNCTIONS)
_OEB
_OEL
_LATCH
A23
A22
A21
A20
A19
A18
A17
_VPA
_LDS
_UDS
R/W
_AS
_DTACK
_BGACK
_HLT
_RST
_OVR
OVL
XRDY
_ROMEN
_EXRAM
_CLKRD
_CLKWR
_RAMEN
_REGEN
_BLISS
_BLIT
_CDAC
_CCK
CCKQ
A[1..23]
GND
C905
100pF
FB102
R105
22
R106
22
J900
R916
4.7k
+5V
R115
330
R114
330
U900C
74F00
U900D
74F00
C907
100pF
C908
100pF
U107A
74F04
U107E
74F04
U107B
74F04
U107F
74F04
U107C
74F04
U107D
74F04
RP902
47
ECDAC
VCDAC
_EC1
_CDAC
C1
C3
_EC3
FB907
_MC1
_VC1
_VC3
RP102
47
AGNUS8372
U101
DRD[0..15]
DRD15
DRD14
DRD13
DRD12
DRD11
DRD10
DRD9
DRD8
DRD7
DRD6
DRD5
DRD4
DRD3
DRD2
DRD1
DRD0
C101
0.1uF
C415
4.7uF 16V
VSS1
VSS2
VSS3
_CASL
_CASU
_RAS0
_RAS1
_WE
J101
normal
special
A16
A15
A14
A13
A12
A11
A10
A9
A8
A7
A6
A5
A4
A3
A2
A1
DRA[0..8]
DRA8
DRA7
DRA6
DRA5
DRA4
DRA3
DRA2
DRA1
DRA0
RGA[1..8]
RGA8
RGA7
RGA6
RGA5
RGA4
RGA3
RGA2
RGA1
U900E
74F00
C918
0.1uF
U108C
74LS74A
C107
0.1uF
VCC
U302C
74LS32
RP907
47
7MHz
E7M
V7M
7M
_RESET
DMAL
_INTR
_INT3
_LPEN
_HSYNC
_VSYNC
_CSYNC
PAL/_NTSC
R101
4.7k
J102
J102
open : PAL
closed : NTSC
U102C
GARY5719
C102
0.1uF
C110
0.1uF
28.63636MHz
X1
OUT
FB101
28M
_XCLKEN
XCLK
28MHZ
R109
4.7k
R110
330
NC

Assy: 312721
Next Assy: 312725
Used on: A2000-CR
Drawn by: Dave Haynie
Commodore
Sheet: /agnus/
File: agnus.sch
Title:
Size: A3 Date: 07/06/1987 **Rev: 6.2-a**
KiCad E.D.A. kicad 5.1.2-f72e74a84ubuntu18.04.1 Id: 10/13

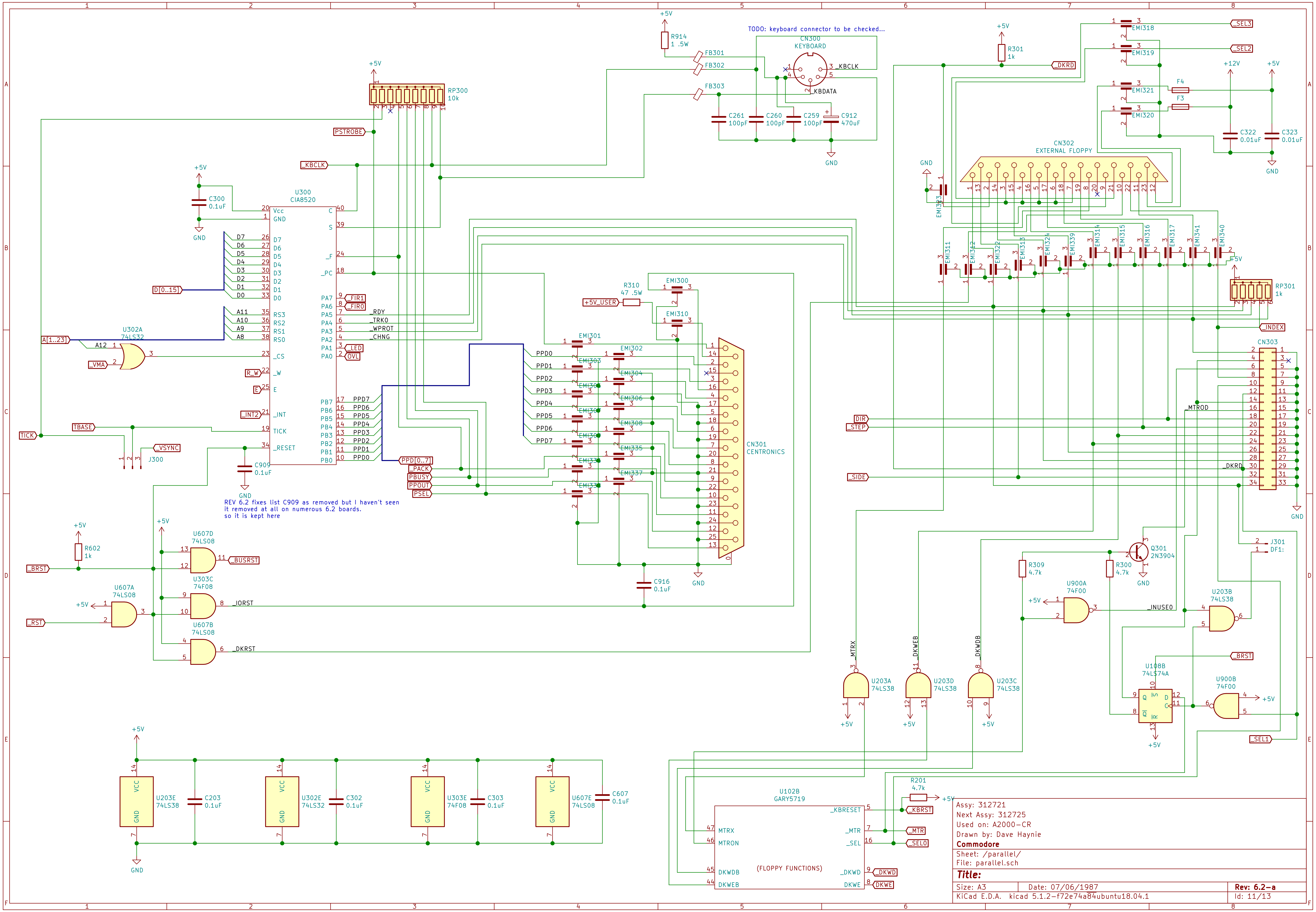
U300
CIA8520
Vcc
GND
D7
D6
D5
D4
D3
D2
D1
D0
RS3
RS2
RS1
RS0
_CS
_W
E
_INT
TICK
_RESET
C
S
_F
_PC
PA7
PA6
PA5
PA4
PA3
PA2
PA1
PA0
PB7
PB6
PB5
PB4
PB3
PB2
PB1
PB0
_FIR1
_FIR0
_RDY
_TRK0
_WPROT
_CHNG
_LED
OVL
D[0..15]
A[1..23]
A12
A11
A10
A9
A8
U302A
74LS32
_VMA
R_W
E
_INT2
TBASE
TICK
_VSYNC
J300
C300
0.1uF
C909
0.1uF
+5V
GND
RP300
10k
PSTROBE
_KBCLK
PPD0
PPD1
PPD2
PPD3
PPD4
PPD5
PPD6
PPD7
PPD[0..7]
_PACK
PBUSY
PPOUT
PSEL
R914
1 .5W
FB301
FB302
FB303
CN300
KEYBOARD
_KBCLK
_KBDATA
C261
100pF
C260
100pF
C259
100pF
C912
470uF
R310
47 .5W
+5V_USER
EMI300
EMI310
EMI301
EMI302
EMI303
EMI304
EMI305
EMI306
EMI307
EMI308
EMI330
EMI335
EMI336
EMI337
CN301
CENTRONICS
C916
0.1uF
R301
1k
_DKRD
EMI318
EMI319
EMI321
EMI320
_SEL3
_SEL2
F4
F3
+12V
C322
0.01uF
C323
0.01uF
CN302
EXTERNAL FLOPPY
EMI323
EMI311
EMI312
EMI322
EMI313
EMI324
EMI339
EMI314
EMI315
EMI316
EMI317
EMI341
EMI340
RP301
1k
_INDEX
CN303
_MTROD
_DIR
_STEP
_SIDE
_DKRD
J301
DF1:
Q301
2N3904
R309
4.7k
R300
4.7k
U900A
74F00
_INUSE0
U203B
74LS38
_BRST
U108B
74LS74A
U900B
74F00
_SEL1
_MTRX
_DKWEB
_DKWDB
U203A
74LS38
U203D
74LS38
U203C
74LS38
R602
1k
_BRST
U607D
74LS08
_BUSRST
U303C
74F08
_IORST
U607A
74LS08
_RST
U607B
74LS08
_DKRST
U203E
74LS38
C203
0.1uF
U302E
74LS32
C302
0.1uF
U303E
74F08
C303
0.1uF
U607E
74LS08
C607
0.1uF
VCC
U102B
GARY5719
_KBRESET
MTRX
_MTR
MTRON
_SEL
DKWDB
_DKWD
DKWEB
DKWE
(FLOPPY FUNCTIONS)
R201
4.7k
_KBRST
_MTR
_SEL0
_DKWD
_DKWE
1
2
3
4
5
6
7
8
A
B
C
D
E
F

TODO: keyboard connector to be checked...

REV 6.2 fixes list C909 as removed but I haven't seen
it removed at all on numerous 6.2 boards.
so it is kept here

Assy: 312721
Next Assy: 312725
Used on: A2000-CR
Drawn by: Dave Haynie
Commodore
Sheet: /parallel/
File: parallel.sch
Title:
Size: A3
Date: 07/06/1987
Rev: 6.2-a
KiCad E.D.A. kicad 5.1.2-f72e74a84ubuntu18.04.1
Id: 11/13

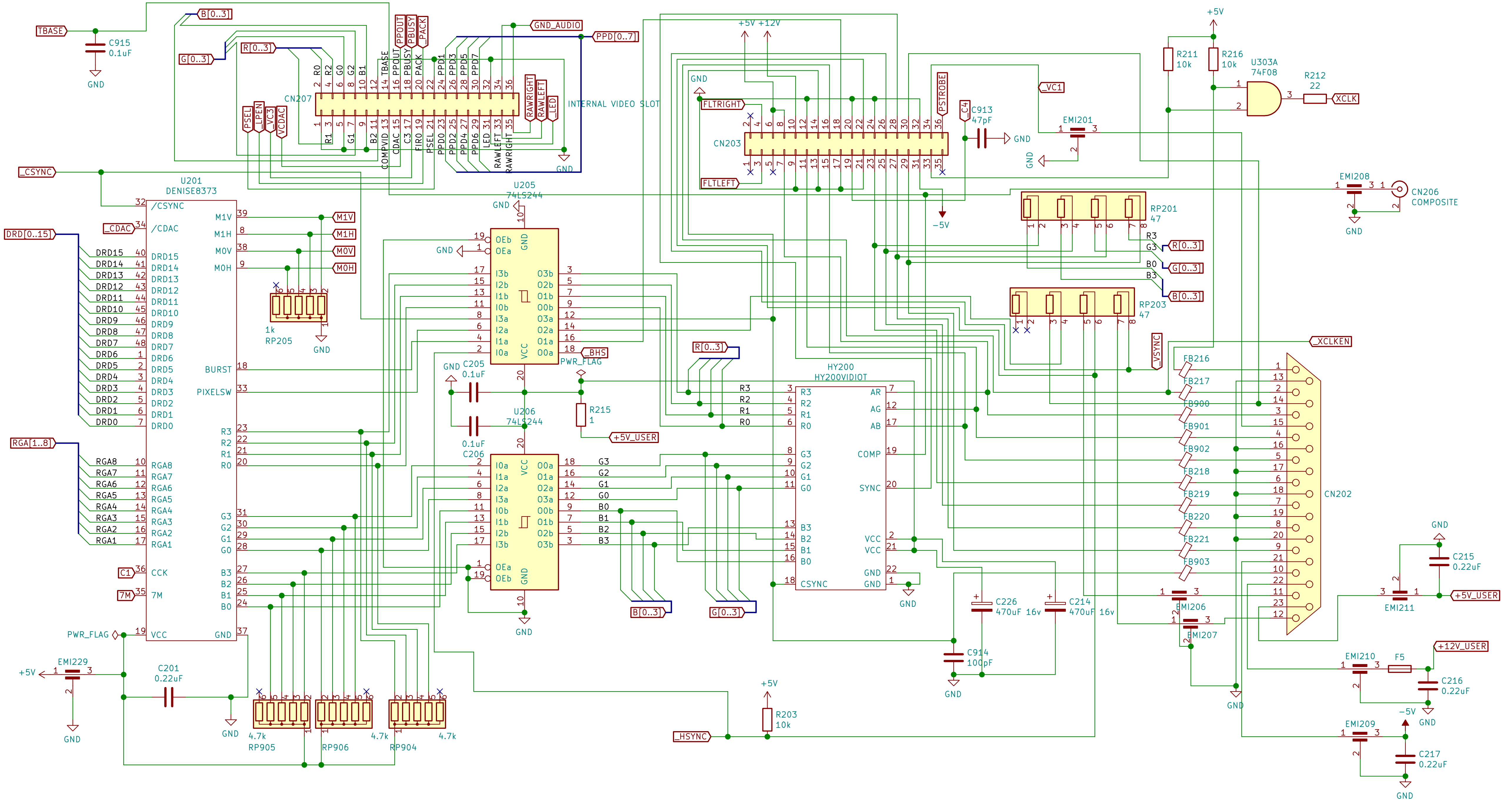

TBASE
C915 0.1uF
GND
B[0..3]
G[0..3]
R[0..3]
CN207
INTERNAL VIDEO SLOT
PPOUT
PBUSY
PACK
GND_AUDIO
PPD[0..7]
RAWRIGHT
RAWLEFT
LED
PSEL
LPEN
VC3
VCDAC
_CSYNC
U201 DENISE8373
/CSYNC
/CDAC
_CDAC
DRD[0..15]
DRD15 DRD14 DRD13 DRD12 DRD11 DRD10 DRD9 DRD8 DRD7 DRD6 DRD5 DRD4 DRD3 DRD2 DRD1 DRD0
M1V M1H M0V M0H
BURST
PIXELSW
RGA[1..8]
RGA8 RGA7 RGA6 RGA5 RGA4 RGA3 RGA2 RGA1
R3 R2 R1 R0
G3 G2 G1 G0
B3 B2 B1 B0
C1 CCK
7M
PWR_FLAG
VCC
GND
1k RP205
U205 74LS244
U206 74LS244
C205 0.1uF
C206 0.1uF
BHS
R215 1
+5V_USER
EMI229
+5V
C201 0.22uF
RP905 4.7k
RP906 4.7k
RP904 4.7k
_HSYNC
R203 10k
+5V +12V
CN203
FLTRIGHT
FLTLEFT
PSTROBE
C4
C913 47pF
-5V
_VC1
EMI201
R211 10k
R216 10k
U303A 74F08
R212 22
XCLK
EMI208
CN206 COMPOSITE
RP201 47
RP203 47
HY200 HY200VIDIOT
AR AG AB COMP SYNC CSYNC
_VSYNC
_XCLKEN
FB216 FB217 FB900 FB901 FB902 FB218 FB219 FB220 FB221 FB903
CN202
EMI206
EMI207
EMI211
C215 0.22uF
C226 470uF 16v
C214 470uF 16v
C914 100pF
EMI210
F5
+12V_USER
C216 0.22uF
EMI209
C217 0.22uF

Assy: 312721
Next Assy: 312725
Used on: A2000–CR
Drawn by: Dave Haynie
Commodore
Sheet: /denise/
File: denise.sch

Title:

Size: A3	Date: 07/06/1987	Rev: 6.2–a
KiCad E.D.A. kicad 5.1.2–f72e74a84ubuntu18.04.1		Id: 12/13

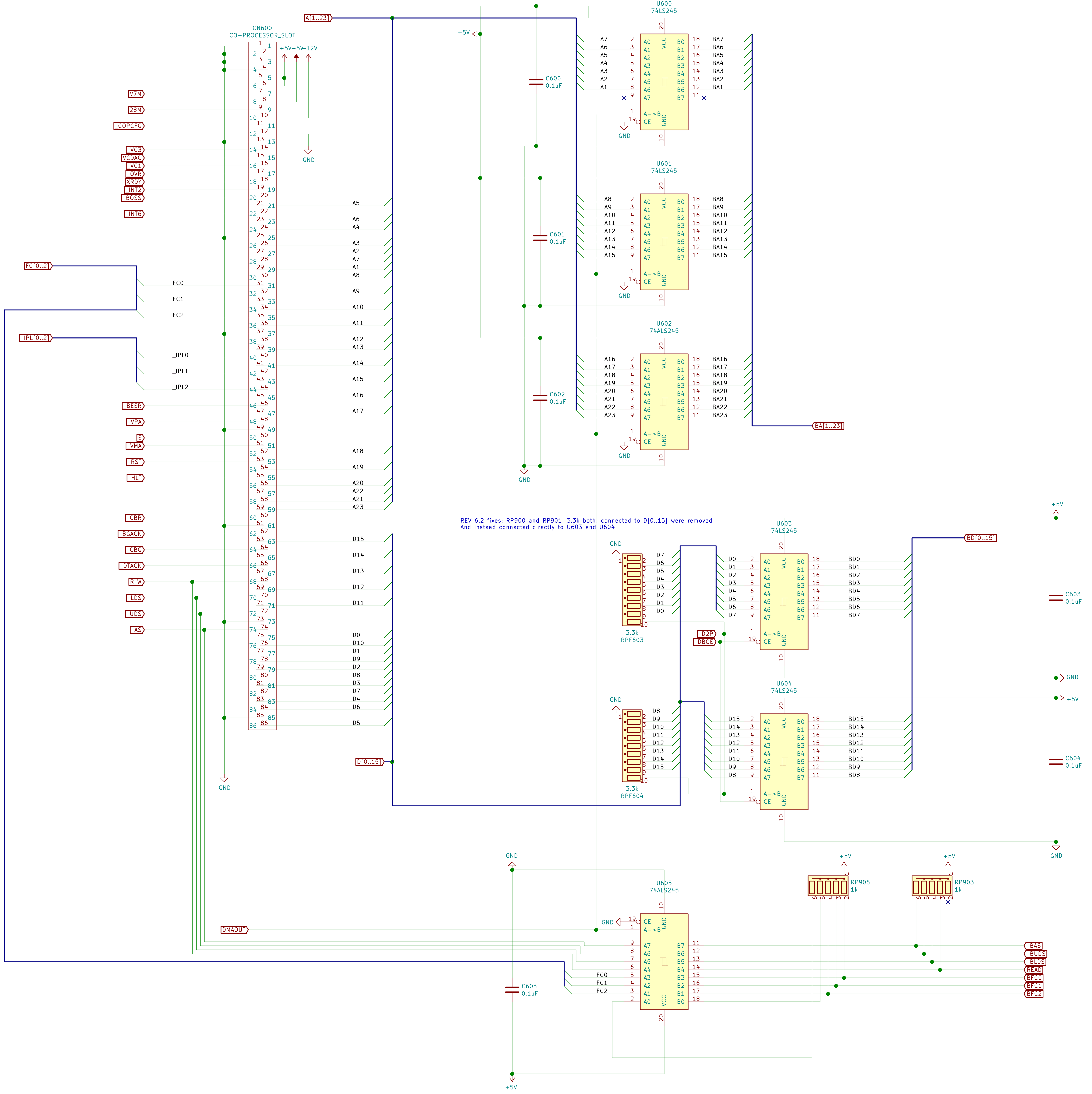
CN600
CO-PROCESSOR_SLOT
+5V
-5V
+12V
GND
A[1..23]
V7M
28M
_COPCFG
_VC3
VCDAC
_VC1
_OVR
XRDY
_INT2
_BOSS
_INT6
FC[0..2]
FC0
FC1
FC2
_IPL[0..2]
_IPL0
_IPL1
_IPL2
_BEER
_VPA
E
_VMA
_RST
_HLT
_CBR
_BGACK
_CBG
_DTACK
R_W
_LDS
_UDS
_AS
D[0..15]
U600
74LS245
C600
0.1uF
U601
74LS245
C601
0.1uF
U602
74ALS245
C602
0.1uF
BA[1..23]
RPF603
3.3k
RPF604
3.3k
U603
74LS245
U604
74LS245
_D2P
_DBOE
BD[0..15]
C603
0.1uF
C604
0.1uF
U605
74ALS245
C605
0.1uF
DMAOUT
RP908
1k
RP903
1k
_BAS
_BUDS
_BLDS
READ
BFC0
BFC1
BFC2

REV 6.2 fixes: RP900 and RP901, 3.3k both, connected to D[0..15] were removed
And instead connected directly to U603 and U604

Assy: 312721
Next Assy: 312725
Used on: A2000-CR
Drawn by: Dave Haynie
Commodore
Sheet: /coprocessor slot/
File: coprocessor slot.sch
Title:
Size: A2
Date: 07/06/1987
Rev: 6.2-a
KiCad E.D.A. kicad 5.1.2-f72e74a84ubuntu18.04.1
Id: 13/13