processor

x done
to review

processor.sch

paula

x done
to review

paula.sch

serial

x done
to review

serial.sch

power

x done
to review

power.sch

chipram

x done
to review

chipram.sch

zorro

x done
to review

zorro.sch

pc slots

x done
to review

pc slots.sch

expansion logic

x done
to review

expansion logic.sch

agnus

x done
to review

agnus.sch

parallel

x done
to review

parallel.sch

denise

x done
to review

denise.sch

coprocessor slot

x done
to review

coprocessor slot.sch

Used on: A2000-CR
Drawn by: Dave Haynie
Commodore
Sheet: /
File: amiga2000.sch

Title:

Size: A4	Date: 07/06/1987	**Rev: 6.2-a**
KiCad E.D.A. kicad 5.1.2-f72e74a84ubuntu18.04.1		Id: 1/13

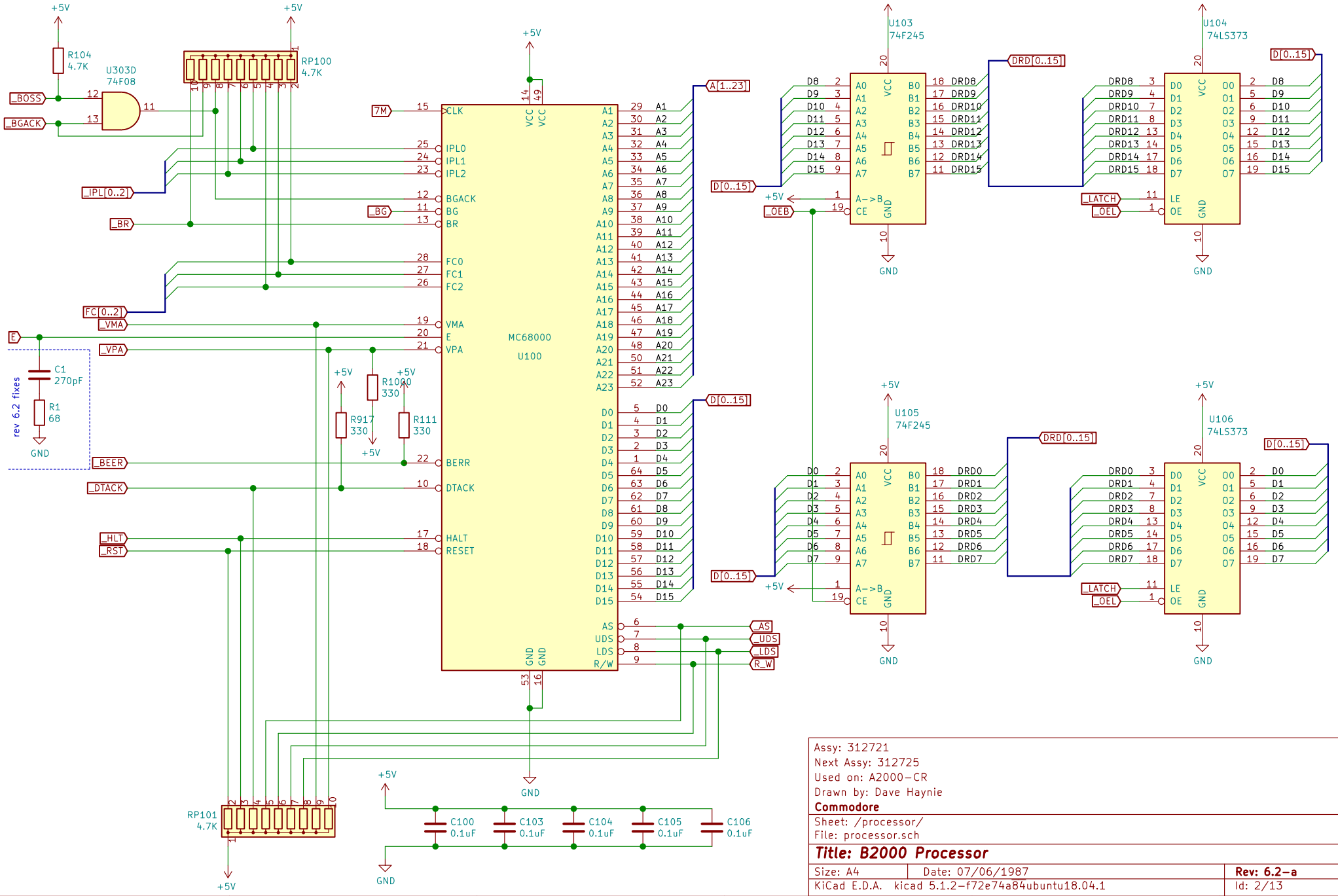

Assy: 312721	
Next Assy: 312725	
Used on: A2000-CR	
Drawn by: Dave Haynie	
Commodore	
Sheet: /processor/	
File: processor.sch	
Title: B2000 Processor	
Size: A4	Date: 07/06/1987
KiCad E.D.A. kicad 5.1.2-f72e74a84ubuntu18.04.1	Id: 2/13

Rev: 6.2-a

PWR_FLAG
+AUD
R200 1
+5V
C225 470uF 16v
C200 +
0.1uF
GND
VCC 27
GND 8
U200
PAULA
DRD15 42
DRD14 43
DRD13 44
DRD12 45
DRD11 46
DRD10 47
DRD9 48
DRD8 1
DRD7 2
DRD6 3
DRD5 4
DRD4 5
DRD3 6
DRD2 7
DRD1 9
DRD0 10
DRD[0..15]
RGA8 19
RGA7 20
RGA6 21
RGA5 22
RGA4 23
RGA3 24
RGA2 25
RGA1 26
RGA[1..8]
CIPL2 15
CIPL1 14
CIPL0 13
_CIPL[0..2]
DMAL 12
C1 28
C3 29
_RST 11
_DKRD 37
_DKWD 38
DKWE 39
_RxD 41
_TxD 40
_INT6 18
_INT3 17
_INT2 16
LEFT 31
RIGHT 30
P0X 32
P0Y 33
P1X 35
P1Y 36
A_Gnd 34
C210 0.047uF
C211 0.047uF
C212 0.047uF
C213 0.047uF
GND_AUDIO
R240 360
C240 0.1uF
U204D LF347
IN4− 13
IN4+ 12
OUT4 14
R241 10k
C241 6800pF
R242 10k
Q200 MPF102
R204 470k
C242 3900pF
GND_AUDIO
U204A LF347
IN1+ 3
IN1− 2
OUT1 1
C243 22uF 16V
R243 1k
C244 0.1uF
R244 390
LEFT AUDIO
CN205
GND
FLTLEFT
AUDOUT
RAWLEFT
R202 10k
AUDIN
RAWRIGHT
FLTRIGHT
R230 360
C230 0.1uF
U204C LF347
IN3− 9
IN3+ 10
OUT3 8
R231 10k
C231 6800pF
R232 10k
Q201 MPF102
R205 470k
C232 3900pF
GND_AUDIO
U204B LF347
IN2+ 5
IN2− 6
OUT2 7
C233 22uF 16V
R233 1k
C234 0.1uF
R234 390
CN204 RIGHT AUDIO
FB401
GND_AUDIO
GND
+AV
R213 2.7k R214 10k
Q202 2N3906
_CUTOFF
C204 0.01uF
R206 10k
+AV
GND_AUDIO
C218 0.047uF
GND
FB215
+5V_USER
F1
FB201
FB202
FB203
FB204
FB211
FB209
FB210
FORWARD 1
FIRE 6
BACK 2
+5V 7
LEFT 3
DGND 8
RIGHT 4
POTY 9
POTX 5
CN200 DB9P RIGHT(1)
+5V
U202 74LS157
RP204 68 (Dx4)
M1V
M1H
M0V
M0H
Za
Zb
Zc
Zd
VCC 16
GND 8
I0a 2
I1a 3
I0b 5
I1b 6
I0c 11
I1c 10
I0d 14
I1d 13
S 1
E 15
2–3 A500
2–1 A1000
J200
_FIR1
_LPEN
_FIR0
C202 0.1uF
4.7k RP200
R900 1k
_MC1
GND
FB205
FB206
FB207
FB208
FB214
FB212
FB213
FORWARD 1
FIRE 6
BACK 2
+5V 7
LEFT 3
DGND 8
RIGHT 4
POTY 9
POTX 5
CN201 DB9P LEFT(0)
+12V
R207 10
C220 0.22uF
C222 47uF 16V
C221 0.22uF
C223 47uF 16V
R208 10
−12V
PWR_FLAG
U204E LF347
V− 11
V+ 4
C900 0.1uF
C901 0.1uF
+AV
−AV
GND_AUDIO
+AUD
R209 1.2k
R210 1.2k
C219 0.22uF
C224 4.7uF 16V
Vref
GND_AUDIO

Assy: 312726
Next Assy: 312725
Used on: A2000−CR
Drawn by: Dave Haynie
Commodore

Sheet: /paula/
File: paula.sch

Title: B2000 Audio

Size: A3	Date: 07/06/1987	**Rev: 6.2−a**
KiCad E.D.A. kicad 5.1.2−f72e74a84ubuntu18.04.1		Id: 3/13

rev 6.2 fixes: D802 removed, PST518B added
also that makes the ERC cry but whatever...

RESET

POWER LED

INTERNAL SERIAL

EXTERNAL SERIAL

Assy: 312726	
Next Assy: 312725	
Used on: A2000-CR	
Drawn by: Dave Haynie	
Commodore	
Sheet: /serial/	
File: serial.sch	
Title: B2000 Serial and Reset	
Size: A3	Date: 07/06/1987
KiCad E.D.A. kicad 5.1.2-f72e74a84ubuntu18.04.1	Id: 4/13

Rev: 6.2-a

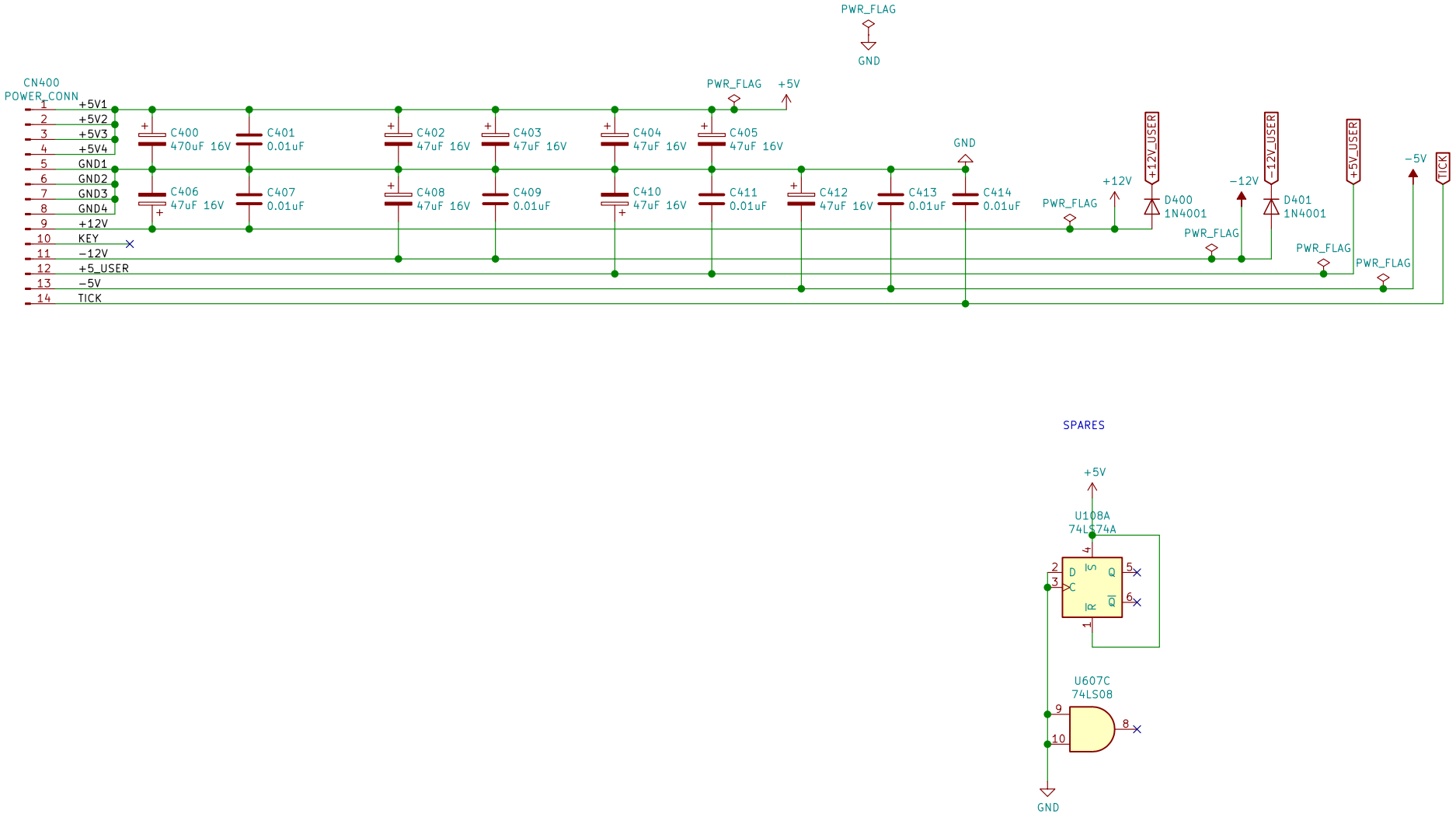

Assy: 312726		
Next Assy: 312725		
Used on: A2000−CR		
Drawn by: Dave Haynie		
Commodore		
Sheet: /power/		
File: power.sch		
Title: B2000 Power		
Size: A4	Date: 07/06/1987	**Rev: 6.2−a**
KiCad E.D.A. kicad 5.1.2−f72e74a84ubuntu18.04.1		Id: 5/13

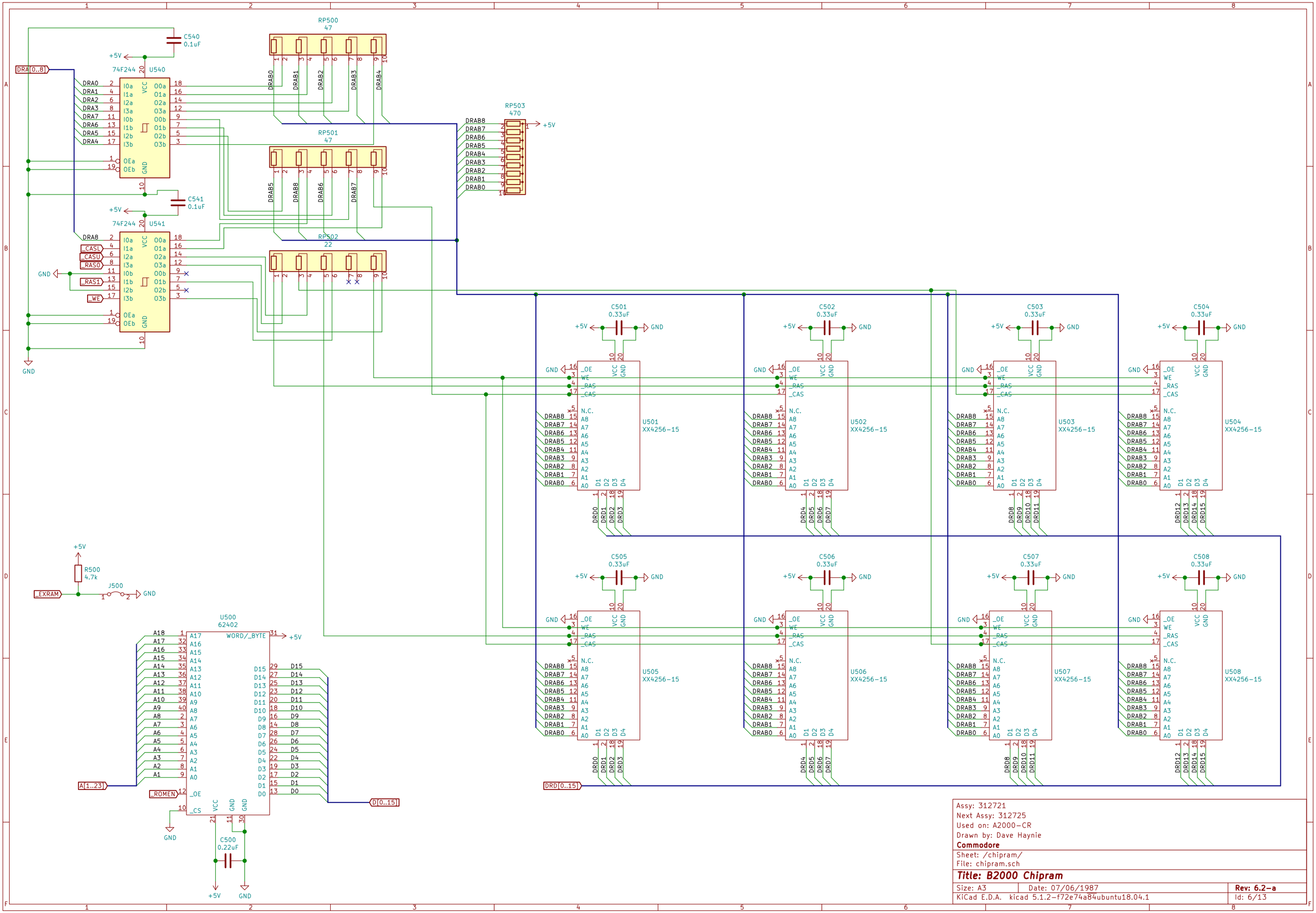
C540
0.1uF
74F244
U540
DRA[0..8]
C541
0.1uF
74F244
U541
GND
RP500
47
RP501
47
RP502
22
RP503
470
DRAB0
DRAB1
DRAB2
DRAB3
DRAB4
DRAB5
DRAB6
DRAB7
DRAB8
C501
0.33uF
C502
0.33uF
C503
0.33uF
C504
0.33uF
C505
0.33uF
C506
0.33uF
C507
0.33uF
C508
0.33uF
U501
XX4256-15
U502
XX4256-15
U503
XX4256-15
U504
XX4256-15
U505
XX4256-15
U506
XX4256-15
U507
XX4256-15
U508
XX4256-15
DRD[0..15]
R500
4.7k
J500
_EXRAM
U500
62402
A[1..23]
_ROMEN
D[0..15]
C500
0.22uF
Assy: 312721
Next Assy: 312725
Used on: A2000-CR
Drawn by: Dave Haynie
Commodore
Sheet: /chipram/
File: chipram.sch
Title: B2000 Chipram
Size: A3
Date: 07/06/1987
Rev: 6.2-a
KiCad E.D.A. kicad 5.1.2-f72e74a84ubuntu18.04.1
Id: 6/13

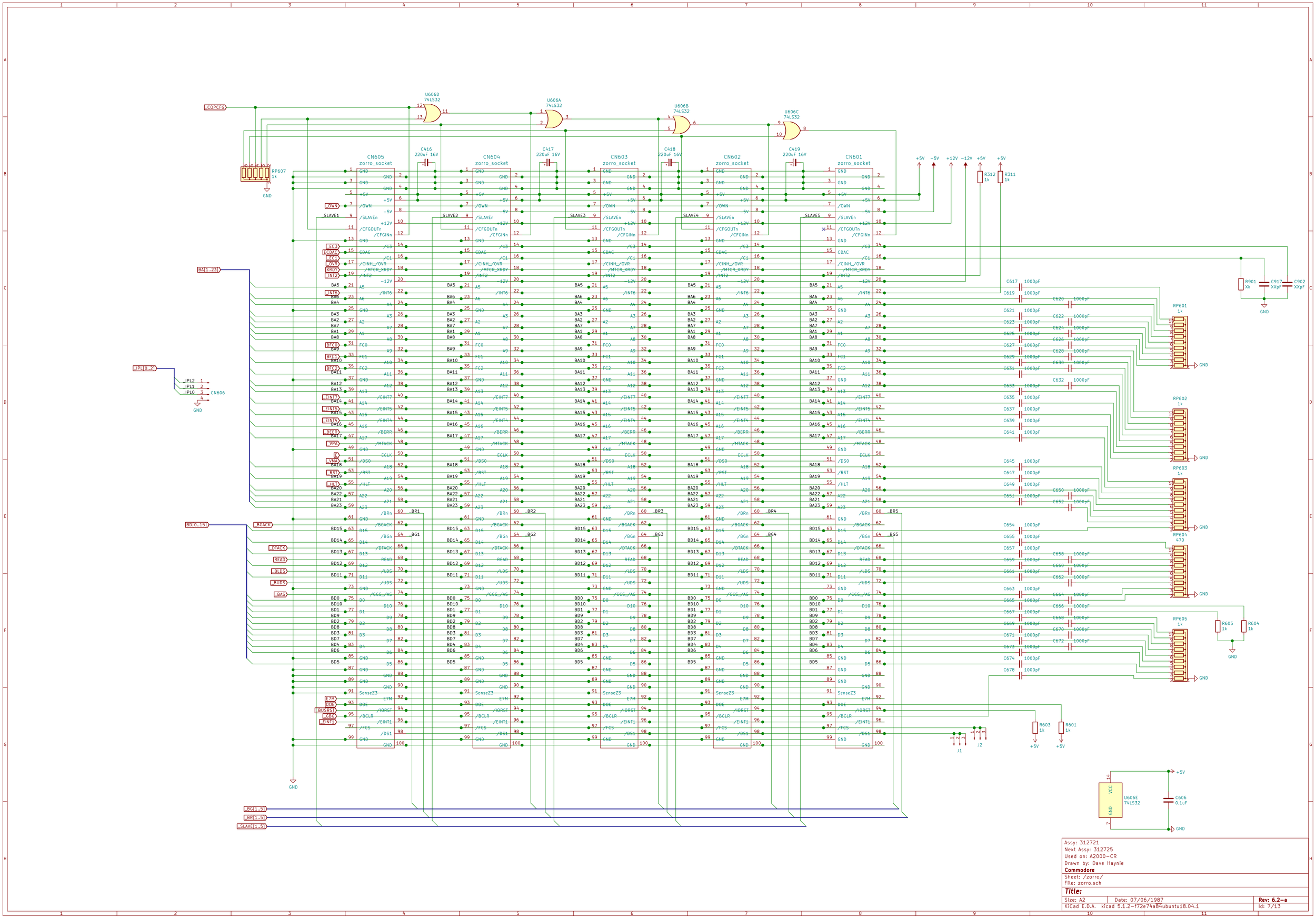

Assy: 312721
Next Assy: 312725
Used on: A2000-CR
Drawn by: Dave Haynie
Commodore
Sheet: /zorro/
File: zorro.sch

Title:

Size: A2	Date: 07/06/1987	**Rev: 6.2-a**
KiCad E.D.A. kicad 5.1.2-f72e74a84ubuntu18.04.1		Id: 7/13

+12V −12V −5V +5V

C703 0.22uF
C704 0.22uF
C702 0.22uF
GND

C705 0.22uF
C701 22uF 16V
C700 0.22uF
GND GND GND

CN700

B1	1	GND	
A1	2		_IOCHK
B2	3		RESDRV
A2	4		D7
B3	5		
A3	6		D6
B4	7		IRQ2
A4	8		D5
B5	9		
A5	10		D4
B6	11		DRQ2
A6	12		D3
B7	13		
A7	14		D2
B8	15		CD_SEL
A8	16		D1
B9	17		
A9	18		D0
B10	19		
A10	20		IOREADY
B11	21		_MEMW
A11	22		AEN
B12	23		_MEMR
A12	24		A19
B13	25		_IOW
A13	26		A18
B14	27		_IOR
A14	28		A17
B15	29		_DACK3
A15	30		A16
B16	31		DRQ3
A16	32		A15
B17	33		_DACK1
A17	34		A14
B18	35		DRQ1
A18	36		A13
B19	37		SMITHEAD
A19	38		A12
B20	39		CLK
A20	40		A11
B21	41		IRQ7
A21	42		A10
B22	43		IRQ6
A22	44		A9
B23	45		IRQ5
A23	46		A8
B24	47		IRQ4
A24	48		A7
B25	49		IRQ3
A25	50		A6
B26	51		_DACK2
A26	52		A5
B27	53		TC
A27	54		A4
B28	55		ALE
A28	56		A3
B29	57		
A29	58		A2
B30	59		OSC
A30	60		A1
B31	61		
A31	63		A0

CN701

B1	1		
A1	2		
B2	3		
A2	4		
B3	5		
A3	6		
B4	7		
A4	8		
B5	9		
A5	10		
B6	11		
A6	12		
B7	13		
A7	14		
B8	15		
A8	16		
B9	17		
A9	18		
B10	19		
A10	20		
B11	21		
A11	22		
B12	23		
A12	24		
B13	25		
A13	26		
B14	27		
A14	28		
B15	29		
A15	30		
B16	31		
A16	32		
B17	33		
A17	34		
B18	35		
A18	36		
B19	37		
A19	38		
B20	39		
A20	40		
B21	41		
A21	42		
B22	43		
A22	44		
B23	45		
A23	46		
B24	47		
A24	48		
B25	49		
A25	50		
B26	51		
A26	52		
B27	53		
A27	54		
B28	55		
A28	56		
B29	57		
A29	58		
B30	59		
A30	60		
B31	61		
A31	62		

CN702

B1	1		
A1	2		
B2	3		
A2	4		
B3	5		
A3	6		
B4	7		
A4	8		
B5	9		
A5	10		
B6	11		
A6	12		
B7	13		
A7	14		
B8	15		
A8	16		
B9	17		
A9	18		
B10	19		
A10	20		
B11	21		
A11	22		
B12	23		
A12	24		
B13	25		
A13	26		
B14	27		
A14	28		
B15	29		
A15	30		
B16	31		
A16	32		
B17	33		
A17	34		
B18	35		
A18	36		
B19	37		
A19	38		
B20	39		
A20	40		
B21	41		
A21	42		
B22	43		
A22	44		
B23	45		
A23	46		
B24	47		
A24	48		
B25	49		
A25	50		
B26	51		
A26	52		
B27	53		
A27	54		
B28	55		
A28	56		
B29	57		
A29	58		
B30	59		
A30	60		
B31	61		
A31	62		

CN703

B1	1		
A1	2		
B2	3		
A2	4		
B3	5		
A3	6		
B4	7		
A4	8		
B5	9		
A5	10		
B6	11		
A6	12		
B7	13		
A7	14		
B8	15		
A8	16		
B9	17		
A9	18		
B10	19		
A10	20		
B11	21		
A11	22		
B12	23		
A12	24		
B13	25		
A13	26		
B14	27		
A14	28		
B15	29		
A15	30		
B16	31		
A16	32		
B17	33		
A17	34		
B18	35		
A18	36		
B19	37		
A19	38		
B20	39		
A20	40		
B21	41		
A21	42		
B22	43		
A22	44		
B23	45		
A23	46		
B24	47		
A24	48		
B25	49		
A25	50		
B26	51		
A26	52		
B27	53		
A27	54		
B28	55		
A28	56		
B29	57		
A29	58		
B30	59		
A30	60		
B31	61		
A31	62		

C711 1000pF
C713 1000pF
C714 1000pF
C716 1000pF
C717 1000pF
C719 1000pF
C720 1000pF
C722 1000pF

RP700 1k
GND

C726 1000pF
C728 1000pF
C730 1000pF
C732 1000pF
C734 1000pF
C736 1000pF
C738 1000pF
C740 1000pF
C742 1000pF
C744 1000pF

RP701 1k
GND

C746 1000pF
C748 1000pF
C750 1000pF
C752 1000pF
C754 1000pF
C756 1000pF
C758 1000pF
C790 1000pF
C791 1000pF
C793 1000pF

RP702 1k
GND

RP705 4.7k
+5V

CN704

D1	1		_MEM16
C1	2		SHBE
D2	3		_IO16
C2	4		LA23
D3	5		IRQ10
C3	6		LA22
D4	7		IRQ11
C4	8		LA21
D5	9		IRQ12
C5	10		LA20
D6	11		IRQ15
C6	12		LA19
D7	13		IRQ14
C7	14		LA18
D8	15		_DACK0
C8	16		LA17
D9	17		DRQ0
C9	18		_MEMR
D10	19		_DACK5
C10	20		_MEMR
D11	21		DRQ5
C11	22		D8
D12	23		_DACK6
C12	24		D9
D13	25		DRQ6
C13	26		D10
D14	27		_DACK7
C14	28		D11
D15	29		DRQ7
C15	30		D12
D16	31		
C16	32		D13
D17	33		_MASTER
C17	34		D14
D18	35		
C18	36		D15

GND

CN705

D1	1		
C1	2		
D2	3		
C2	4		
D3	5		
C3	6		
D4	7		
C4	8		
D5	9		
C5	10		
D6	11		
C6	12		
D7	13		
C7	14		
D8	15		
C8	16		
D9	17		
C9	18		
D10	19		
C10	20		
D11	21		
C11	22		
D12	23		
C12	24		
D13	25		
C13	26		
D14	27		
C14	28		
D15	29		
C15	30		
D16	31		
C16	32		
D17	33		
C17	34		
D18	35		
C18	36		

CN706

D1	1		
C1	2		
D2	3		
C2	4		
D3	5		
C3	6		
D4	7		
C4	8		
D5	9		
C5	10		
D6	11		
C6	12		
D7	13		
C7	14		
D8	15		
C8	16		
D9	17		
C9	18		
D10	19		
C10	20		
D11	21		
C11	22		
D12	23		
C12	24		
D13	25		
C13	26		
D14	27		
C14	28		
D15	29		
C15	30		
D16	31		
C16	32		
D17	33		
C17	34		
D18	35		
C18	36		

CN707

D1	1		
C1	2		
D2	3		
C2	4		
D3	5		
C3	6		
D4	7		
C4	8		
D5	9		
C5	10		
D6	11		
C6	12		
D7	13		
C7	14		
D8	15		
C8	16		
D9	17		
C9	18		
D10	19		
C10	20		
D11	21		
C11	22		
D12	23		
C12	24		
D13	25		
C13	26		
D14	27		
C14	28		
D15	29		
C15	30		
D16	31		
C16	32		
D17	33		
C17	34		
D18	35		
C18	36		

C794 1000pF
C796 1000pF
C760 1000pF
C762 1000pF
C764 1000pF
C766 1000pF
C768 1000pF
C770 1000pF

RP703 1k
GND

C776 1000pF
C778 1000pF
C780 1000pF
C782 1000pF
C784 1000pF
C786 1000pF
C787 1000pF
C789 1000pF

RP704 1k
GND

Note: R6 PCB — C789 is noted C788 and connected to _MASTER instead of D15

Assy: 312721
Next Assy: 312725
Used on: A2000-CR
Drawn by: Dave Haynie
Commodore
Sheet: /pc slots/
File: pc slots.sch

Title:

Size: A2	Date: 07/06/1987	**Rev: 6.2-a**
KiCad E.D.A. kicad 5.1.2-f72e74a84ubuntu18.04.1		Id: 8/13

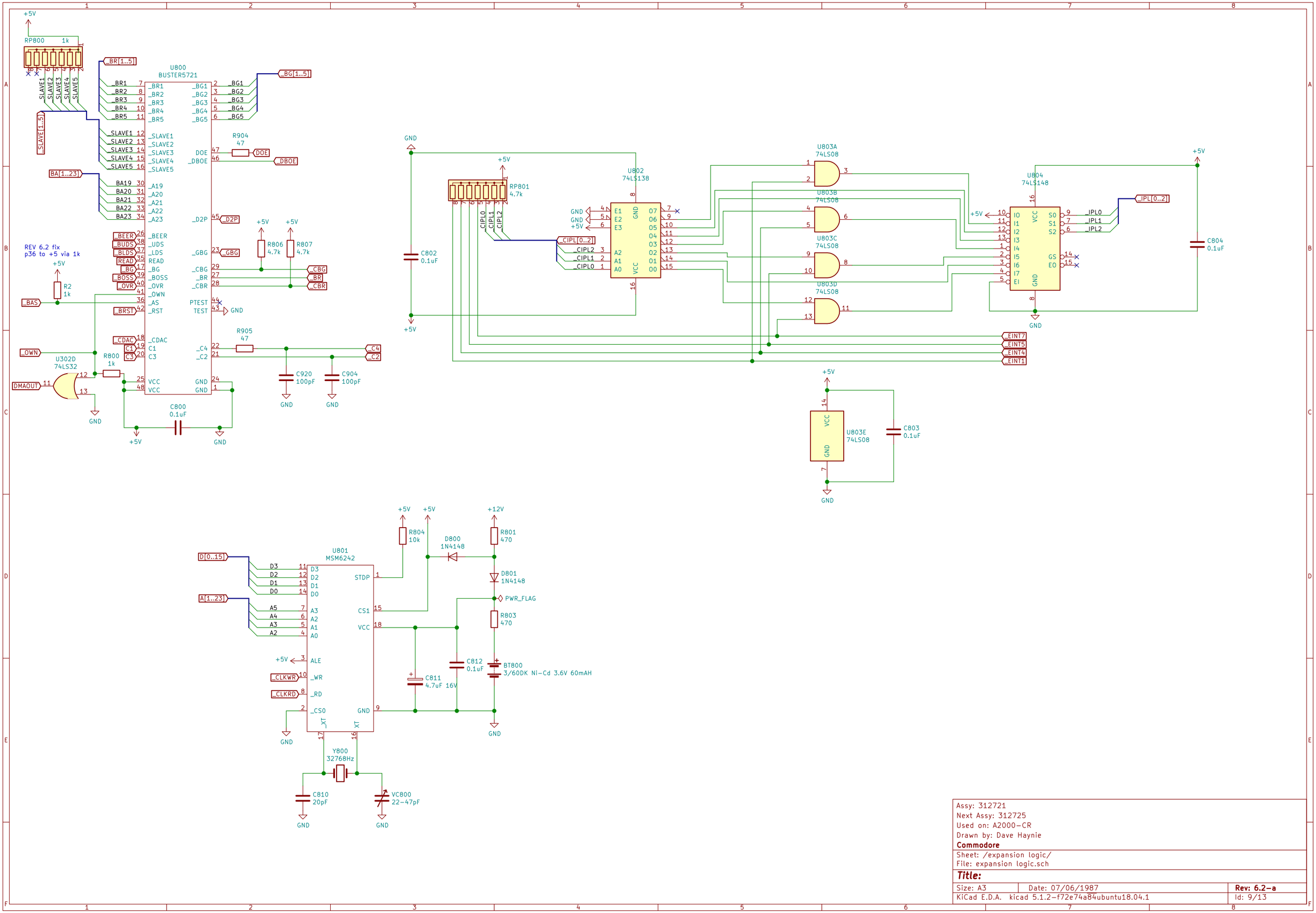

Assy: 312721		
Next Assy: 312725		
Used on: A2000-CR		
Drawn by: Dave Haynie		
Commodore		
Sheet: /expansion logic/		
File: expansion logic.sch		
Title:		
Size: A3	Date: 07/06/1987	**Rev: 6.2-a**
KiCad E.D.A. kicad 5.1.2-f72e74a84ubuntu18.04.1		Id: 9/13

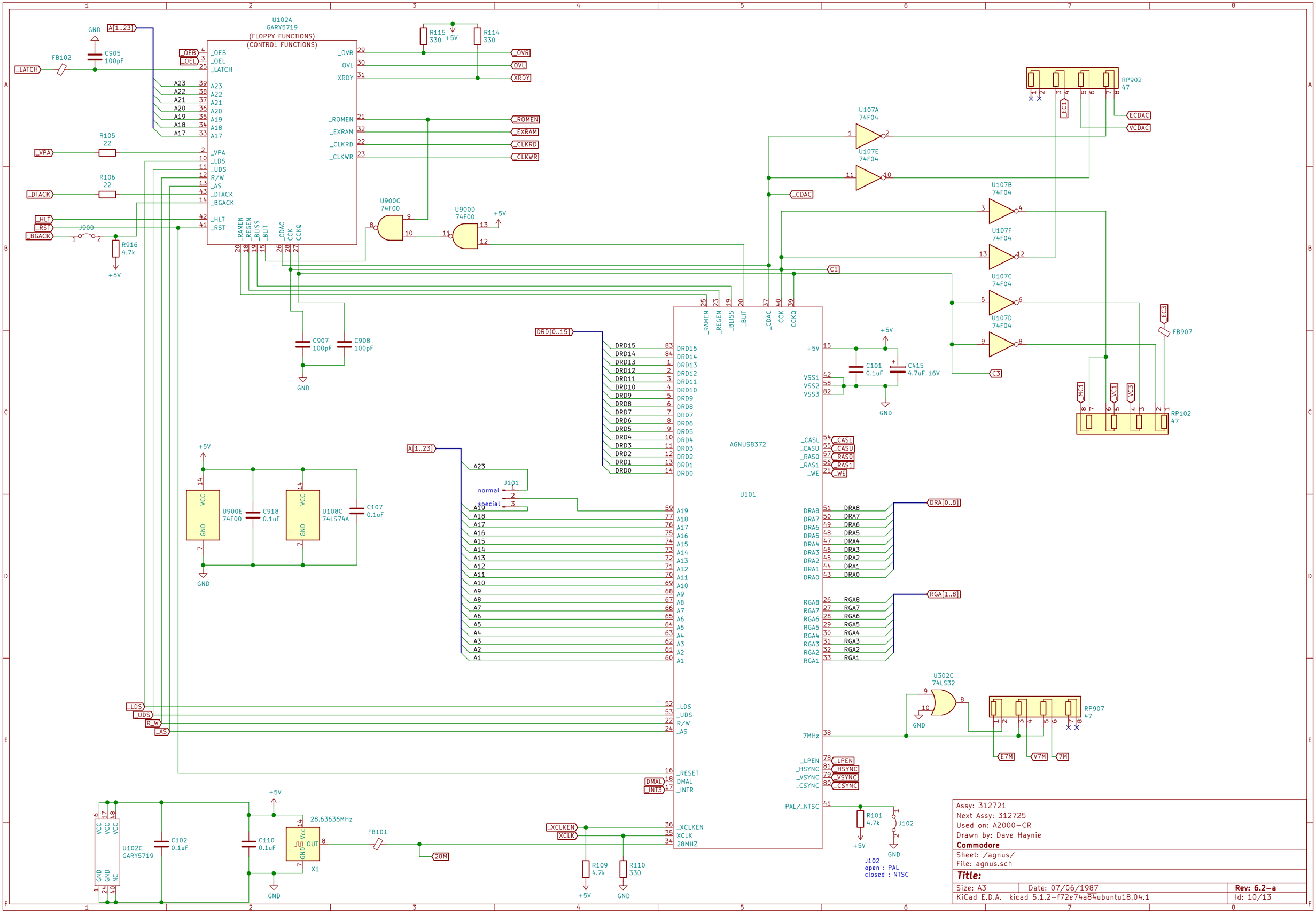
U102A
GARY5719
(FLOPPY FUNCTIONS)
(CONTROL FUNCTIONS)
AGNUS8372
U101
U900C
74F00
U900D
74F00
U900E
74F00
U108C
74LS74A
U107A
74F04
U107E
74F04
U107B
74F04
U107F
74F04
U107C
74F04
U107D
74F04
U302C
74LS32
U102C
GARY5719
RP902
47
RP102
47
RP907
47
J900
J101
normal
special
J102
open : PAL
closed : NTSC
28.63636MHz
X1
FB102
FB101
FB907
C905
100pF
C907
100pF
C908
100pF
C918
0.1uF
C107
0.1uF
C101
0.1uF
C415
4.7uF 16V
C102
0.1uF
C110
0.1uF
R105
22
R106
22
R916
4.7k
R115
330
R114
330
R109
4.7k
R110
330
R101
4.7k
Assy: 312721
Next Assy: 312725
Used on: A2000-CR
Drawn by: Dave Haynie
Commodore
Sheet: /agnus/
File: agnus.sch
Title:
Size: A3
Date: 07/06/1987
Rev: 6.2-a
KiCad E.D.A. kicad 5.1.2-f72e74a84ubuntu18.04.1
Id: 10/13

TODO: keyboard connector to be checked...

REV 6.2 fixes list C909 as removed but I haven't seen
it removed at all on numerous 6.2 boards.
so it is kept here

Assy:	312721
Next Assy:	312725
Used on:	A2000-CR
Drawn by:	Dave Haynie
Commodore	
Sheet:	/parallel/
File:	parallel.sch
Title:	
Size: A3	Date: 07/06/1987 — **Rev: 6.2-a**
KiCad E.D.A.	kicad 5.1.2-f72e74a84ubuntu18.04.1 — Id: 11/13

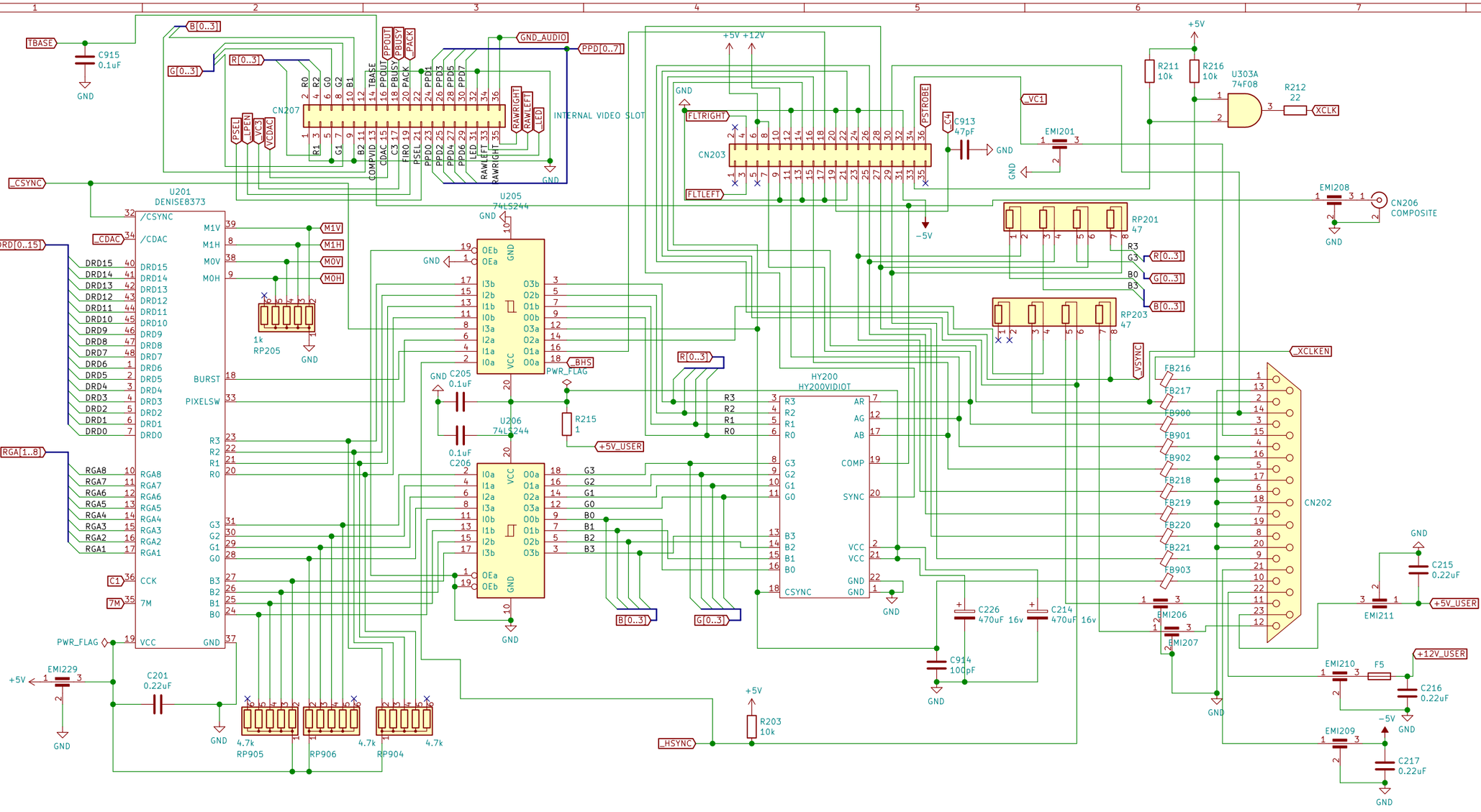

Assy: 312721		
Next Assy: 312725		
Used on: A2000-CR		
Drawn by: Dave Haynie		
Commodore		
Sheet: /denise/		
File: denise.sch		
Title:		
Size: A3	Date: 07/06/1987	**Rev: 6.2-a**
KiCad E.D.A. kicad 5.1.2-f72e74a84ubuntu18.04.1		Id: 12/13

CN600
CO-PROCESSOR_SLOT
+5V-5W-12V
GND
A[1..23]
V7M
Z8M
_COPCFG
_VC3
VCDAC
_VC5
_OVR
XRDY
_INT2
_BOSS
_INT6
A5
A6
A4
A3
A2
A7
A1
A8
A9
A10
A11
A12
A13
A14
A15
A16
A17
A18
A19
A20
A22
A21
A23
FC[0..2]
FC0
FC1
FC2
IPL[0..2]
_IPL0
_IPL1
_IPL2
_BEER
_VPA
E
_VMA
_RST
_HLT
_CBR
_BGACK
_CBG
_DTACK
R_W
_LDS
_UDS
_AS
D15
D14
D13
D12
D11
D10
D9
D8
D7
D6
D5
D4
D3
D2
D1
D0
D[0..15]
U600
74LS245
U601
74LS245
U602
74ALS245
C600
0.1uF
C601
0.1uF
C602
0.1uF
BA[1..23]
BA7
BA6
BA5
BA4
BA3
BA2
BA1
BA8
BA9
BA10
BA11
BA12
BA13
BA14
BA15
BA16
BA17
BA18
BA19
BA20
BA21
BA22
BA23
A->B
CE
REV 6.2 fixes: RP900 and RP901, 3.3k both, connected to D[0..15] were removed
And instead connected directly to U603 and U604
U603
74LS245
U604
74LS245
RPF603
3.3k
RPF604
_D2P
_DBOE
BD[0..15]
BD0
BD1
BD2
BD3
BD4
BD5
BD6
BD7
BD8
BD9
BD10
BD11
BD12
BD13
BD14
BD15
C603
0.1uF
C604
0.1uF
U605
74ALS245
DMAOUT
C605
0.1uF
RP908
1k
RP903
1k
BAS
BUDS
BLDS
READ
BFC0
BFC1
BFC2

Assy: 312721		
Next Assy: 312725		
Used on: A2000-CR		
Drawn by: Dave Haynie		
Commodore		
Sheet: /coprocessor slot/		
File: coprocessor slot.sch		
Title:		
Size: A2	Date: 07/06/1987	**Rev: 6.2-a**
KiCad E.D.A. kicad 5.1.2-f72e74a84ubuntu18.04.1		Id: 13/13