Sheet: processor
review 1 : ok
review 2 :
File: processor.sch

Sheet: paula
review 1 : ok
review 2 :
File: paula.sch

Sheet: serial
review 1 : ok
review 2 :
File: serial.sch

Sheet: power
review 1 : ok
review 2 :
File: power.sch

Sheet: chipram
review 1 : ok
review 2 :
File: chipram.sch

Sheet: zorro
review 1 : ok
review 2 :
File: zorro.sch

Sheet: pc slots
review 1 : ok
review 2 :
File: pc slots.sch

Sheet: expansion logic
review 1 : ok
review 2 :
File: expansion logic.sch

Sheet: agnus
review 1 : ok
review 2 :
File: agnus.sch

Sheet: parallel
review 1 : ok
review 2 :
File: parallel.sch

Sheet: denise
review 1 : ok
review 2 :
File: denise.sch

Sheet: coprocessor slot
review 1 : ok
review 2 :
File: coprocessor slot.sch

Notes: XX4256-15 pins 18 and 19 are swapped in the original scanned schematics
pin 18 of U501 is DRD2, and 19 is DRD3.

Rev 6.3 fixes :
- Kickstart 2.03 and Denise 8373

Rev 6.4 fixes :
- Agnus 8375
- Instead of R101, add a capacitor (100nF) from right side of R101 to ground

Used on: A2000-CR
Drawn by: Dave Haynie
Commodore
Sheet: /
File: amiga2000.sch
Title:
Size: A4 | Date: 07/06/1987 | **Rev: 6.2-a**
KiCad E.D.A. kicad (5.1.9)-1 | Id: 1/13

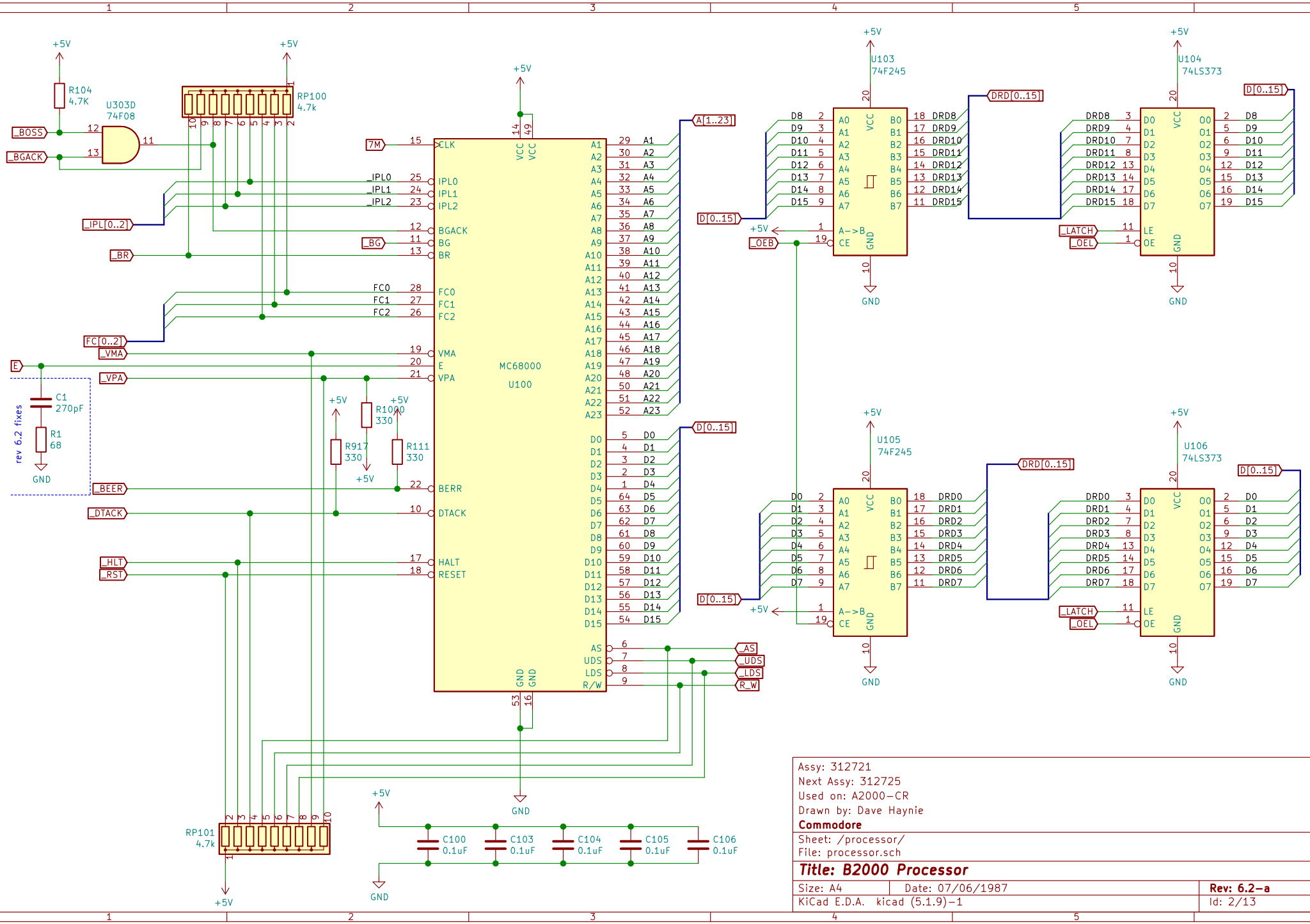
U100
MC68000
U303D
74F08
U103
74F245
U104
74LS373
U105
74F245
U106
74LS373
RP100
4.7k
RP101
4.7k
R104
4.7K
R1
68
C1
270pF
R917
330
R1000
330
R111
330
C100
0.1uF
C103
0.1uF
C104
0.1uF
C105
0.1uF
C106
0.1uF
rev 6.2 fixes
+5V
GND
_BOSS
_BGACK
_IPL[0..2]
_BR
FC[0..2]
_VMA
E
_VPA
_BEER
_DTACK
_HLT
_RST
7M
_IPL0
_IPL1
_IPL2
_BG
FC0
FC1
FC2
A[1..23]
D[0..15]
DRD[0..15]
_OEB
_LATCH
_OEL
_AS
_UDS
_LDS
R_W
Assy: 312721
Next Assy: 312725
Used on: A2000-CR
Drawn by: Dave Haynie
Commodore
Sheet: /processor/
File: processor.sch
Title: B2000 Processor
Size: A4
Date: 07/06/1987
Rev: 6.2-a
KiCad E.D.A. kicad (5.1.9)-1
Id: 2/13

PWR_FLAG
+AUD
R200 1
+5V
C225 470uF 16/25v
C200 +
0.1uF
GND
+AUD
27
VCC
8
GND
U200
PAULA
DRD15 42
DRD14 43
DRD13 44
DRD12 45
DRD11 46
DRD10 47
DRD9 48
DRD8 1
DRD7 2
DRD6 3
DRD5 4
DRD4 5
DRD3 6
DRD2 7
DRD1 9
DRD0 10
DRD[0..15]
DRD15
DRD14
DRD13
DRD12
DRD11
DRD10
DRD9
DRD8
DRD7
DRD6
DRD5
DRD4
DRD3
DRD2
DRD1
DRD0
RGA8 19
RGA7 20
RGA6 21
RGA5 22
RGA4 23
RGA3 24
RGA2 25
RGA1 26
RGA[1..8]
RGA8
RGA7
RGA6
RGA5
RGA4
RGA3
RGA2
RGA1
CIPL2 15
CIPL1 14
CIPL0 13
_CIPL[0..2]
_IPL2
_IPL1
_IPL0
DMAL 12
DMAL
C1 28
CCK
C3 29
CCKQ
_RST 11
_RESET
_DKRD 37
_DKWD 38
DKWE 39
_RxD 41
_TxD 40
_INT6 18
_INT3 17
_INT2 16
LEFT 31
RIGHT 30
P0X 32
P0Y 33
P1X 35
P1Y 36
A_Gnd 34
C210 0.047uF
C211 0.047uF
C212 0.047uF
C213 0.047uF
GND_AUDIO
_DKRD
_DKWD
DKWE
_RxD
_TxD
_INT6
_INT3
_INT2
R240 360
C240 0.1uF
U204D LF347
IN4−
IN4+
OUT4
R241 10k
C241 6800pF
R242 10k
Q200 MPF102
R204 470k
C242 3900pF
GND_AUDIO
U204A LF347
IN1+
IN1−
OUT1
C243 22uF 16V
R243 1k
C244 0.1uF
R244 390
LEFT AUDIO
CN205
GND
FLTLEFT
AUDOUT
RAWLEFT
R202 10k
R230 360
C230 0.1uF
U204C LF347
IN3−
IN3+
OUT3
R231 10k
C231 6800pF
R232 10k
Q201 MPF102
R205 470k
C232 3900pF
GND_AUDIO
U204B LF347
IN2+
IN2−
OUT2
C233 22uF 16V
R233 1k
C234 0.1uF
R234 390
CN204 RIGHT AUDIO
FB401
GND_AUDIO
GND
AUDIN
RAWRIGHT
FLTRIGHT
+AV
R213 2.7k R214 10k
Q202 2N3906
_CUTOFF
C204 0.01uF
R206 10k
+AV
GND_AUDIO
C218 0.047uF
GND
FB215
+5V_USER
4A F1
+5V
4.7k RP200
U202 74LS157
RP204 68 (isolated, pack)
M1V
M1H
M0V
M0H
C202 0.1uF
Za
Zb
Zc
Zd
VCC
GND
I0a
I1a
I0b
I1b
I0c
I1c
I0d
I1d
S
E
R900 1k
_MC1
FMI230
FMI231
FMI232
FMI233
FMI234
FMI235
FMI236
FMI237
FMI238
FMI239
FMI240
FMI241
FMI242
FMI243
FORWARD
FIRE
BACK
+5V
LEFT
DGND
RIGHT
POTY
POTX
DB9P RIGHT(1) CN200
DB9P LEFT(0) CN201
+12V
R207 10
C220 0.22uF
C221 0.22uF
C222 47uF 16V
C223 47uF 16V
PWR_FLAG
V+
V−
LF347 U204E
C900 0.1uF
C901 0.1uF
+AV
−AV
GND_AUDIO
R208 10
−12V
R209 1.2k
R210 1.2k
C219 0.22uF
C224 4.7uF 16V
Vref
J200
_FIRQ 2−1 A500 STD
LPEN 2−3 A1000 OLD
_FIR1

Assy: 312726
Next Assy: 312725
Used on: A2000−CR
Drawn by: Dave Haynie
Commodore
Sheet: /paula/
File: paula.sch

Title: B2000 Audio

Size: A3	Date: 07/06/1987	**Rev: 6.2−a**
KiCad E.D.A. kicad (5.1.9)−1		Id: 3/13

rev 6.2 fixes: D802 removed, PST518B added
also that makes the ERC cry but whatever...

RESET

POWER LED

INTERNAL SERIAL

EXTERNAL SERIAL

Assy: 312726	
Next Assy: 312725	
Used on: A2000-CR	
Drawn by: Dave Haynie	
Commodore	
Sheet: /serial/	
File: serial.sch	
Title: B2000 Serial and Reset	
Size: A3	Date: 07/06/1987
KiCad E.D.A. kicad (5.1.9)-1	Id: 4/13
	Rev: 6.2-a

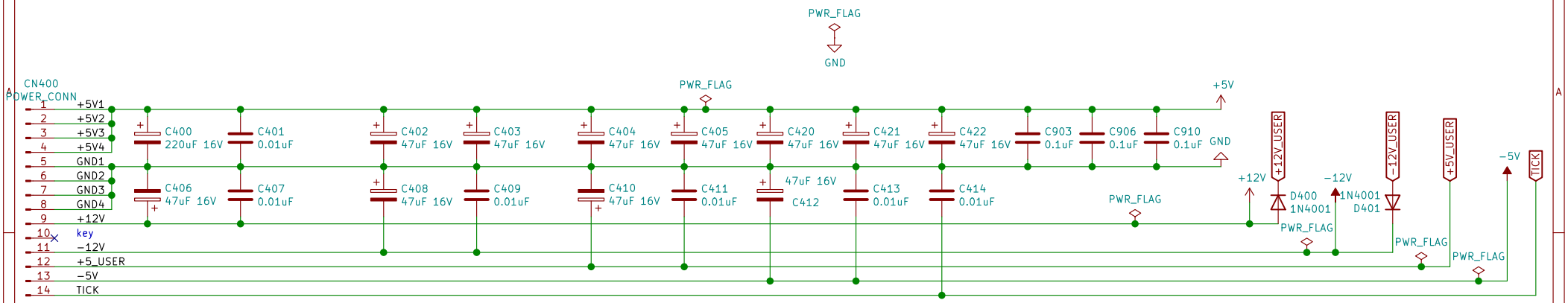

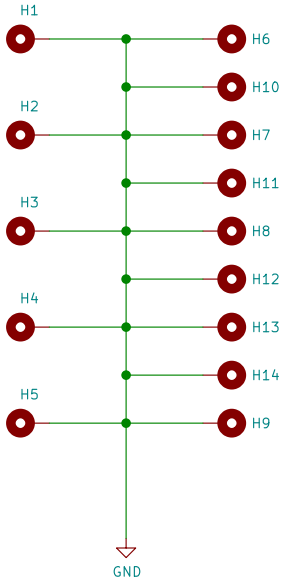

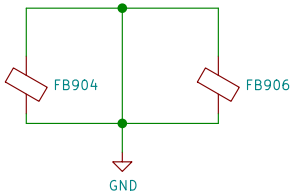

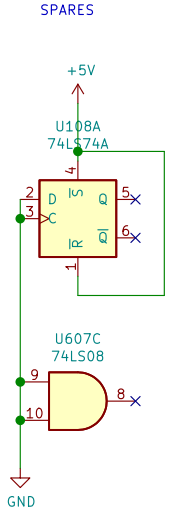

Assy: 312726 Next Assy: 312725 Used on: A2000−CR Drawn by: Dave Haynie **Commodore**		
Sheet: /power/ File: power.sch		
Title: B2000 Power		
Size: A4	Date: 07/06/1987	**Rev: 6.2−a**
KiCad E.D.A. kicad (5.1.9)−1		Id: 5/13

C540
0.1uF
+5V
74F244
U540
DRA[0..8]
DRA0
DRA1
DRA2
DRA3
DRA7
DRA6
DRA5
DRA4
I0a
I1a
I2a
I3a
I0b
I1b
I2b
I3b
VCC
O0a
O1a
O2a
O3a
O0b
O1b
O2b
O3b
OEa
OEb
GND
C541
0.1uF
+5V
74F244
U541
DRA8
_CASL
_CASU
_RAS0
_RAS1
_WE
GND
RP500
47 (isolated, pack)
DRAB0
DRAB1
DRAB2
DRAB3
DRAB4
RP501
47 (isolated, pack)
DRAB5
DRAB8
DRAB6
DRAB7
RP502
22 (isolated, pack)
RP503
470
DRAB8
DRAB7
DRAB6
DRAB5
DRAB4
DRAB3
DRAB2
DRAB1
DRAB0
+5V
C501
0.33uF
C502
0.33uF
C503
0.33uF
C504
0.33uF
C505
0.33uF
C506
0.33uF
C507
0.33uF
C508
0.33uF
_OE
WE
_RAS
_CAS
N.C.
A8
A7
A6
A5
A4
A3
A2
A1
A0
D1
D2
D3
D4
U501
XX4256-15
U502
XX4256-15
U503
XX4256-15
U504
XX4256-15
U505
XX4256-15
U506
XX4256-15
U507
XX4256-15
U508
XX4256-15
DRD0
DRD1
DRD2
DRD3
DRD4
DRD5
DRD6
DRD7
DRD8
DRD9
DRD10
DRD11
DRD12
DRD13
DRD14
DRD15
DRD[0..15]
R500
4.7k
J500
_EXRAM
U500
62402
A18
A17
A16
A15
A14
A13
A12
A11
A10
A9
A8
A7
A6
A5
A4
A3
A2
A1
WORD/_BYTE
_OE
_CS
_ROMEN
VCC
GND
C500
0.22uF
A[1..23]
D[0..15]

Assy: 312721
Next Assy: 312725
Used on: A2000-CR
Drawn by: Dave Haynie
Commodore

Sheet: /chipram/
File: chipram.sch

Title: B2000 Chipram

Size: A3	Date: 07/06/1987	**Rev: 6.2-a**
KiCad E.D.A. kicad (5.1.9)-1		Id: 6/13

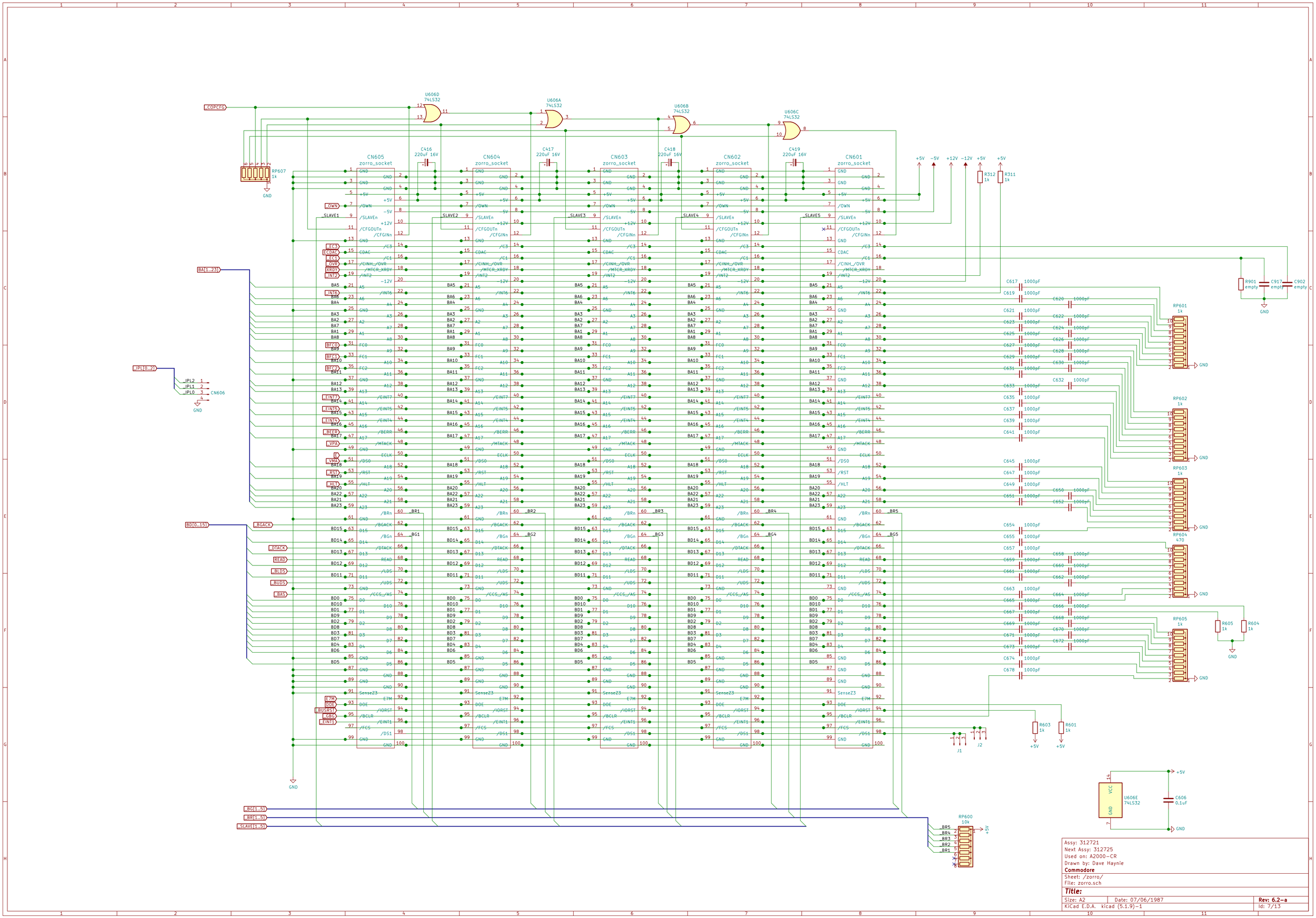

Assy: 312721
Next Assy: 312725
Used on: A2000-CR
Drawn by: Dave Haynie
Commodore
Sheet: /zorro/
File: zorro.sch

Title:

Size: A2	Date: 07/06/1987	**Rev: 6.2-a**
KiCad E.D.A. kicad (5.1.9)-1		Id: 7/13

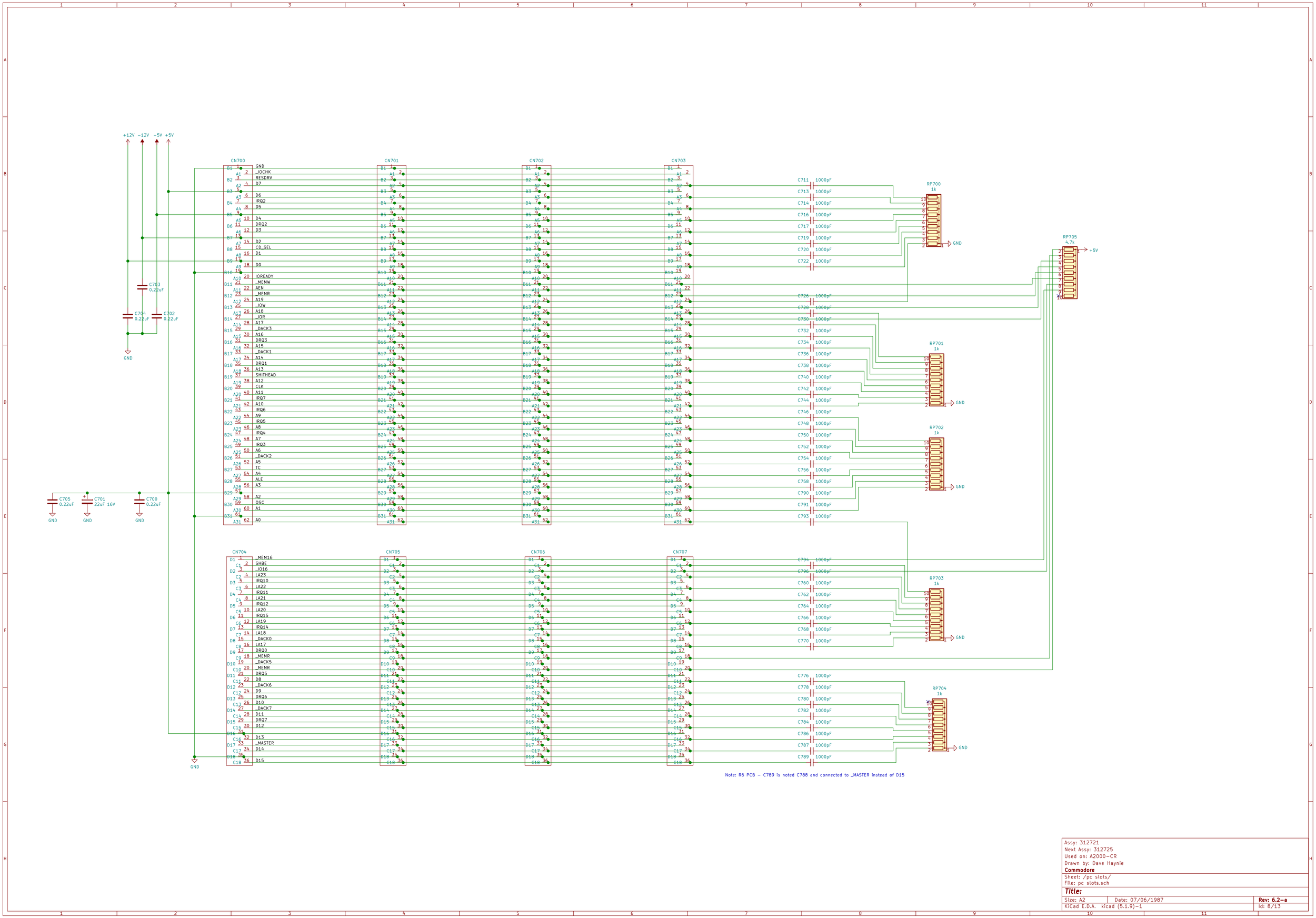

Assy: 312721
Next Assy: 312725
Used on: A2000-CR
Drawn by: Dave Haynie
Commodore
Sheet: /pc slots/
File: pc slots.sch

Title:

Size: A2	Date: 07/06/1987	**Rev: 6.2-a**
KiCad E.D.A. kicad (5.1.9)-1		Id: 8/13

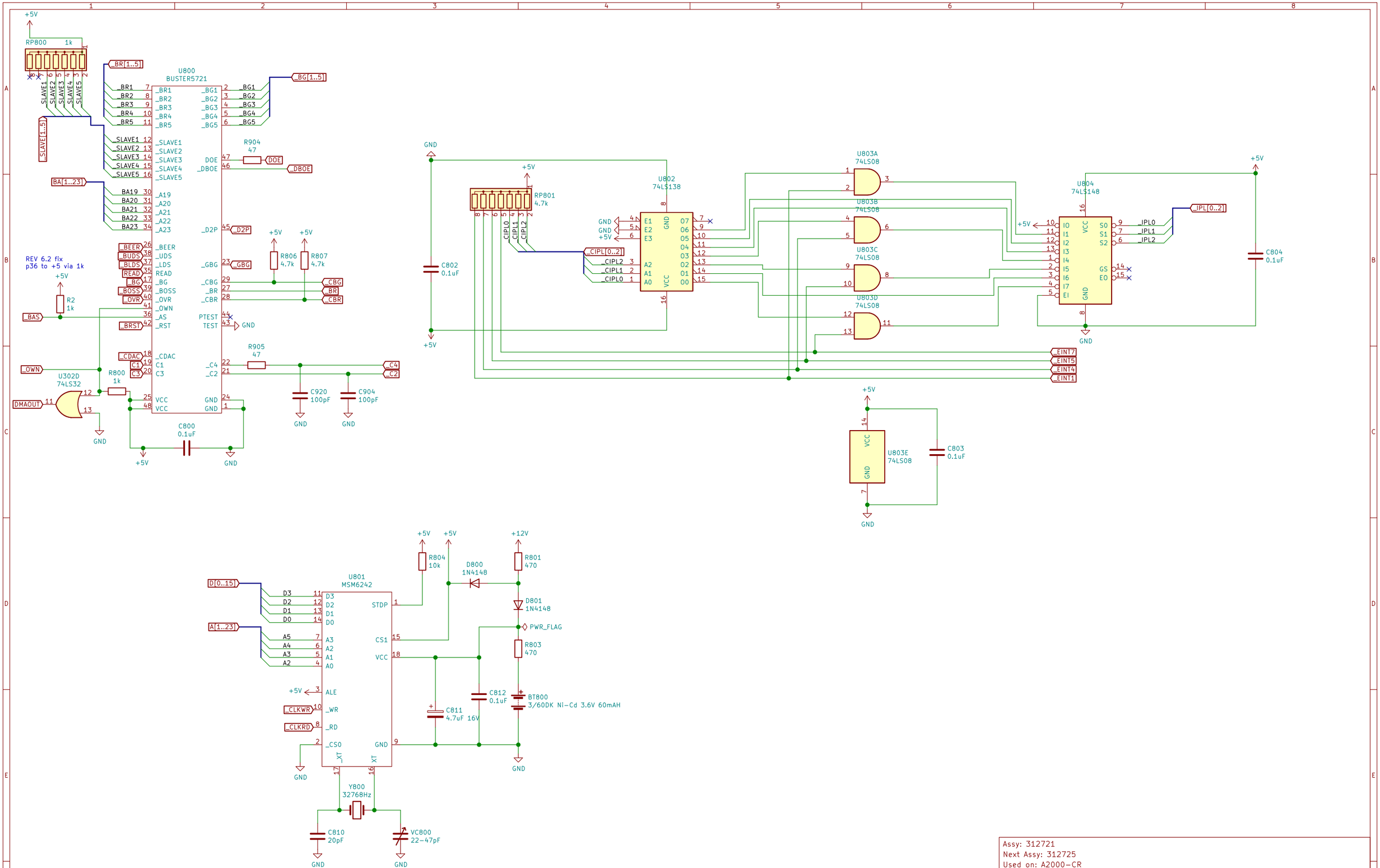

Assy: 312721		
Next Assy: 312725		
Used on: A2000-CR		
Drawn by: Dave Haynie		
Commodore		
Sheet: /expansion logic/		
File: expansion logic.sch		
Title:		
Size: A3	Date: 07/06/1987	**Rev: 6.2-a**
KiCad E.D.A. kicad (5.1.9)-1		Id: 9/13

U102A
GARY5719
(FLOPPY FUNCTIONS)
(CONTROL FUNCTIONS)

GND
A[1..23]
C905
100pF
FB102
_LATCH
_OEB
_OEL
_LATCH
A23
A22
A21
A20
A19
A18
A17
R105
22
_VPA
R106
22
_DTACK
_HLT
_RST
_BGACK
J900
R916
4.7k
+5V
_VPA
_LDS
_UDS
R/W
_AS
_DTACK
_BGACK
_HLT
_RST
_RAMEN
_REGEN
_BUSS
_BLIT
_CDAC
CCK
CCKQ
C907
100pF
C908
100pF
GND
R115
330
+5V
R114
330
_OVR
OVL
XRDY
_ROMEN
_EXRAM
_CLKRD
_CLKWR
U900C
74F00
U900D
74F00
+5V
RP902
47 (isolated, pack)
ECDAC
VCDAC
U107A
74F04
U107E
74F04
U107B
74F04
U107F
74F04
U107C
74F04
U107D
74F04
_CDAC
C1
C3
FB907
RP102
47 (isolated, pack)
_MC1
_VC1
_VC3
DRD[0..15]
DRD15
DRD14
DRD13
DRD12
DRD11
DRD10
DRD9
DRD8
DRD7
DRD6
DRD5
DRD4
DRD3
DRD2
DRD1
DRD0
AGNUS8372
U101
+5V
VSS1
VSS2
VSS3
C101
0.1uF
C415
4.7uF 16V
GND
_CASL
_CASU
_RAS0
_RAS1
_WE
A[1..23]
A23
J101
normal
special
A19
A18
A17
A16
A15
A14
A13
A12
A11
A10
A9
A8
A7
A6
A5
A4
A3
A2
A1
DRA[0..8]
DRA8
DRA7
DRA6
DRA5
DRA4
DRA3
DRA2
DRA1
DRA0
RGA[1..8]
RGA8
RGA7
RGA6
RGA5
RGA4
RGA3
RGA2
RGA1
U900E
74F00
C918
0.1uF
U108C
74LS74A
C108
0.1uF
U107G
74F04
C107
0.1uF
U302C
74LS32
RP907
47 (isolated, pack)
E7M
V7M
7M
7MHz
_LDS
_UDS
R_W
_AS
_RESET
DMAL
_INT3
_LPEN
_HSYNC
_VSYNC
_CSYNC
PAL/_NTSC
R101
4.7k
J102
open : PAL
closed : NTSC
U102C
GARY5719
C102
0.1uF
C110
0.1uF
28.37516MHz (pal)
X1
FB101
28M
_XCLKEN
XCLK
28MHZ
R109
4.7k
R110
330

Assy: 312721		
Next Assy: 312725		
Used on: A2000-CR		
Drawn by: Dave Haynie		
Commodore		
Sheet: /agnus/		
File: agnus.sch		
Title:		
Size: A3	Date: 07/06/1987	**Rev: 6.2-a**
KiCad E.D.A. kicad (5.1.9)-1		Id: 10/13

MOD: Breakout _OVR and _INT2
to pin header to avoid needing
to clip to CIA and GARY.

REV 6.2 fixes list C909 as removed but I haven't seen
it removed at all on numerous 6.2 boards.
so it is kept here

PARALLEL

EXT FLOPPY

Assy: 312721	
Next Assy: 312725	
Used on: A2000-CR	
Drawn by: Dave Haynie	
Commodore	
Sheet: /parallel/	
File: parallel.sch	
Title:	
Size: A3	Date: 07/06/1987
KiCad E.D.A. kicad (5.1.9)-1	Id: 11/13

Rev: 6.2-a

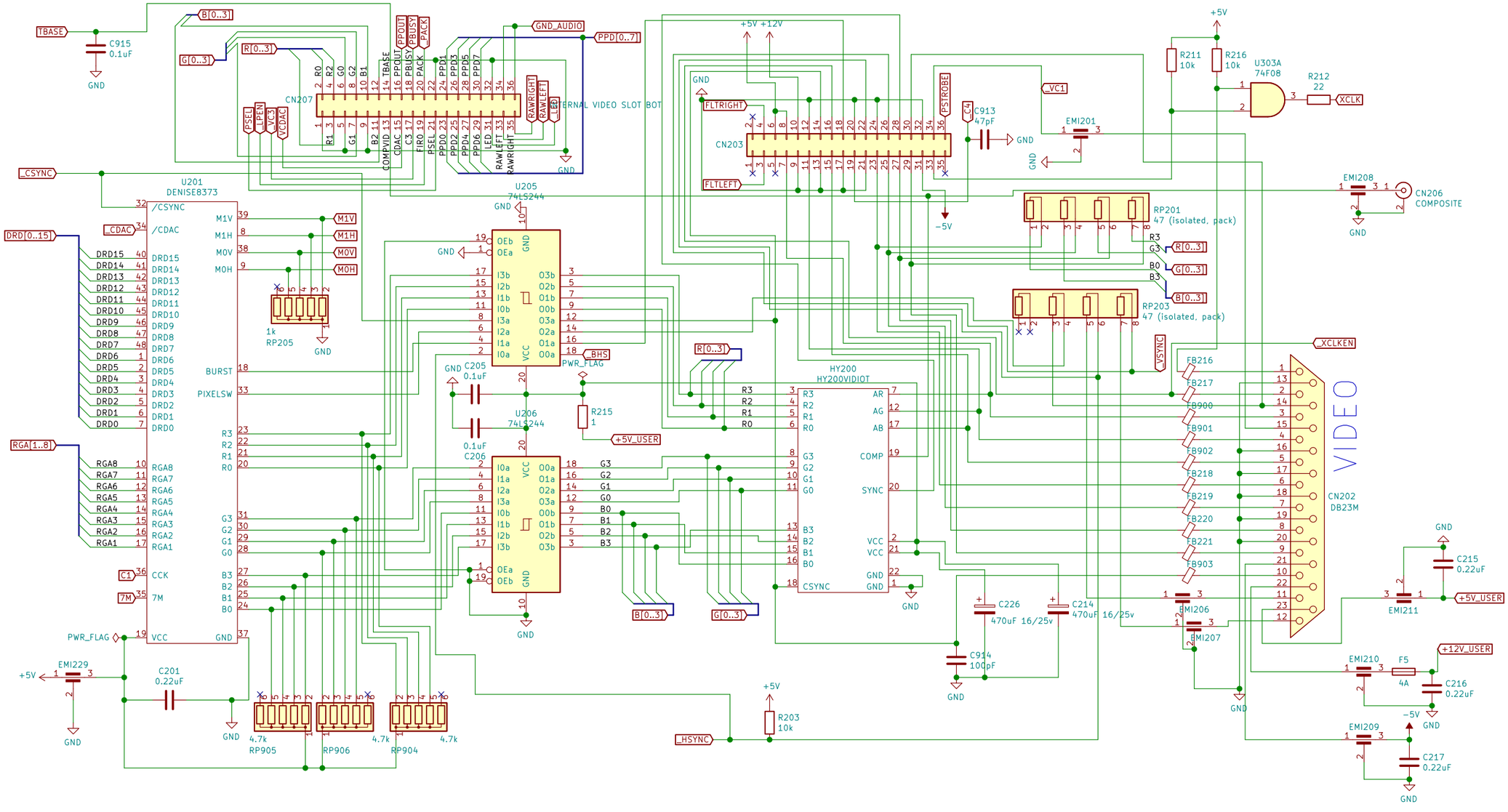

Assy: 312721		
Next Assy: 312725		
Used on: A2000-CR		
Drawn by: Dave Haynie		
Commodore		
Sheet: /denise/		
File: denise.sch		
Title:		
Size: A3	Date: 07/06/1987	**Rev: 6.2-a**
KiCad E.D.A. kicad (5.1.9)-1		Id: 12/13

CN600
CO-PROCESSOR_SLOT

+5V-5W-12V

GND

A[1..23]

V7M
Z8M
_COPCFG
_VC3
VCDAC
_VC5
_OVR
XRDY
_INT2
_BOSS
_INT6

A5
A6
A4
A3
A2
A7
A1
A8
A9
A10
A11
A12
A13
A14
A15
A16
A17
A18
A19
A20
A22
A21
A23

FC[0..2]
FC0
FC1
FC2

IPL[0..2]
_IPL0
_IPL1
_IPL2

_BEER
_VPA
E
_VMA
_RST
_HLT

_CBR
_BGACK
_CBG
_DTACK
R_W
_LDS
_UDS
_AS

D15
D14
D13
D12
D11
D10
D9
D8
D3
D7
D4
D6
D5
D0
D10
D1
D9
D2
D8
D3
D7
D4
D6
D5

D[0..15]

U600
74LS245

U601
74LS245

U602
74ALS245

A7 A6 A5 A4 A3 A2 A1
A8 A9 A10 A11 A12 A13 A14 A15
A16 A17 A18 A19 A20 A21 A22 A23

A0 A1 A2 A3 A4 A5 A6 A7
B0 B1 B2 B3 B4 B5 B6 B7
VCC GND
A->B
CE

BA7 BA6 BA5 BA4 BA3 BA2 BA1
BA8 BA9 BA10 BA11 BA12 BA13 BA14 BA15
BA16 BA17 BA18 BA19 BA20 BA21 BA22 BA23

BA[1..23]

C600 0.1uF
C601 0.1uF
C602 0.1uF

+5V
GND

REV 6.2 fixes: RP900 and RP901, 3.3k both, connected to D[0..15] were removed
And instead connected directly to U603 and U604

U603
74LS245

U604
74LS245

D0 D1 D2 D3 D4 D5 D6 D7
D8 D9 D10 D11 D12 D13 D14 D15

BD0 BD1 BD2 BD3 BD4 BD5 BD6 BD7
BD8 BD9 BD10 BD11 BD12 BD13 BD14 BD15

BD[0..15]

_D2P
_DBOE

RPF603 3.3k
RPF604 3.3k

C603 0.1uF
C604 0.1uF

U605
74ALS245

DMAOUT

C605 0.1uF

RP908 1k
RP903 1k

BAS
BUDS
BLDS
READ
BFC0
BFC1
BFC2

Assy: 312721
Next Assy: 312725
Used on: A2000-CR
Drawn by: Dave Haynie
Commodore
Sheet: /coprocessor slot/
File: coprocessor slot.sch
Title:
Size: A2 | Date: 07/06/1987 | **Rev: 6.2-a**
KiCad E.D.A. kicad (5.1.9)-1 | Id: 13/13