processor
review 1 : ok
review 2 :
processor.sch

paula
review 1 : ok
review 2 :
paula.sch

serial
review 1 : ok
review 2 :
serial.sch

power
review 1 : ok
review 2 :
power.sch

chipram
review 1 : ok
review 2 :
chipram.sch

zorro
review 1 : ok
review 2 :
zorro.sch

pc slots
review 1 : ok
review 2 :
pc slots.sch

expansion logic
review 1 : ok
review 2 :
expansion logic.sch

agnus
review 1 : ok
review 2 :
agnus.sch

parallel
review 1 : ok
review 2 :
parallel.sch

denise
review 1 : ok
review 2 :
denise.sch

coprocessor slot
review 1 : ok
review 2 :
coprocessor slot.sch

Notes: XX4256-15 pins 18 and 19 are swapped in the original scanned schematics
pin 18 of U501 is DRD2, and 19 is DRD3.

Rev 6.3 fixes :
- Kickstart 2.03 and Denise 8373

Rev 6.4 fixes :
- Agnus 8375
- Instead of R101, add a capacitor (100nF) from right side of R101 to ground

Used on: A2000-CR
Drawn by: Dave Haynie
Commodore
Sheet: /
File: amiga2000.sch

Title:

Size: A4	Date: 07/06/1987	**Rev: 6.2-a**
KiCad E.D.A. kicad (5.1.2-1)-1		Id: 1/13

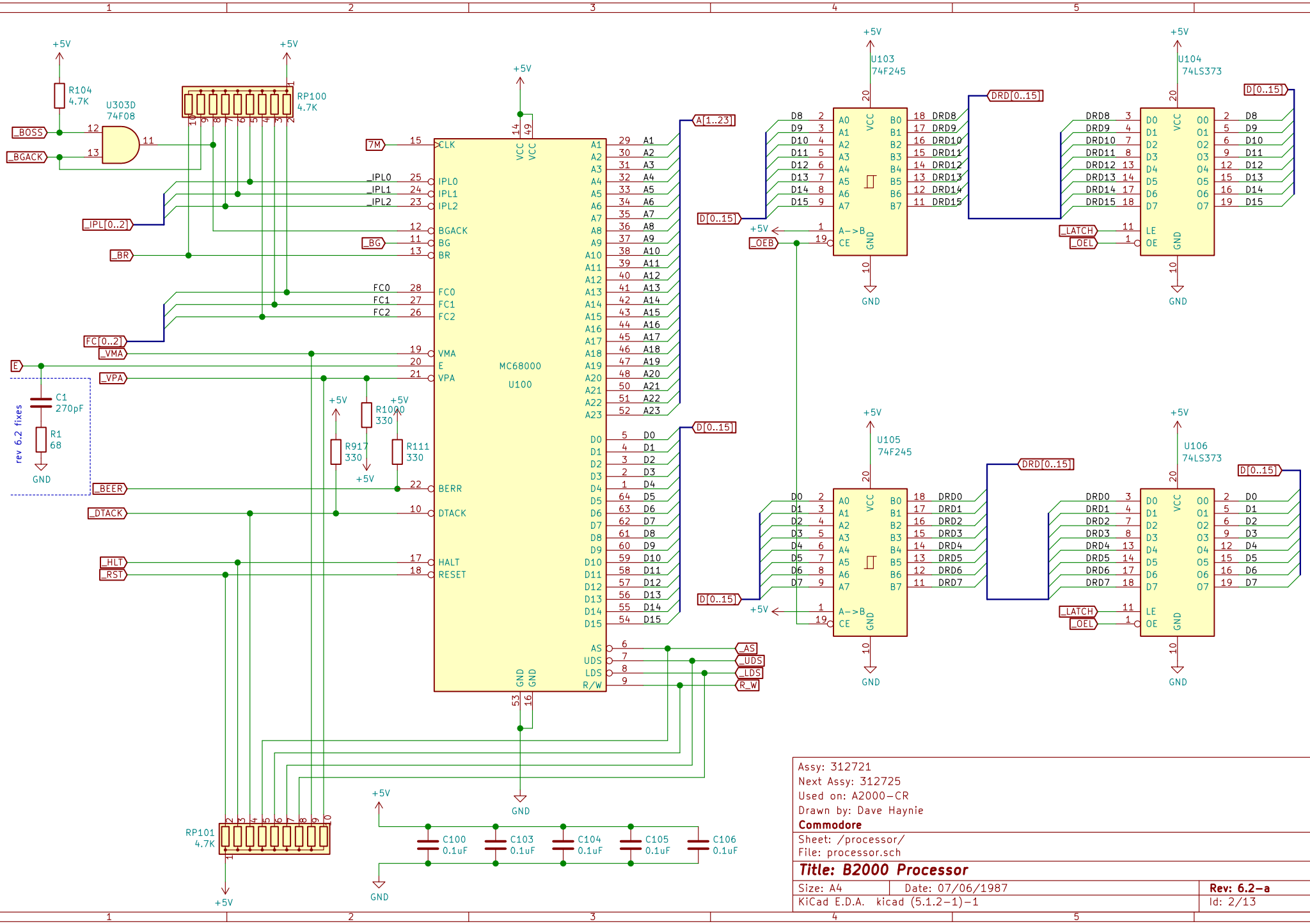

Assy: 312721	
Next Assy: 312725	
Used on: A2000-CR	
Drawn by: Dave Haynie	
Commodore	
Sheet: /processor/	
File: processor.sch	
Title: B2000 Processor	
Size: A4	Date: 07/06/1987
KiCad E.D.A. kicad (5.1.2-1)-1	**Rev: 6.2-a**
	Id: 2/13

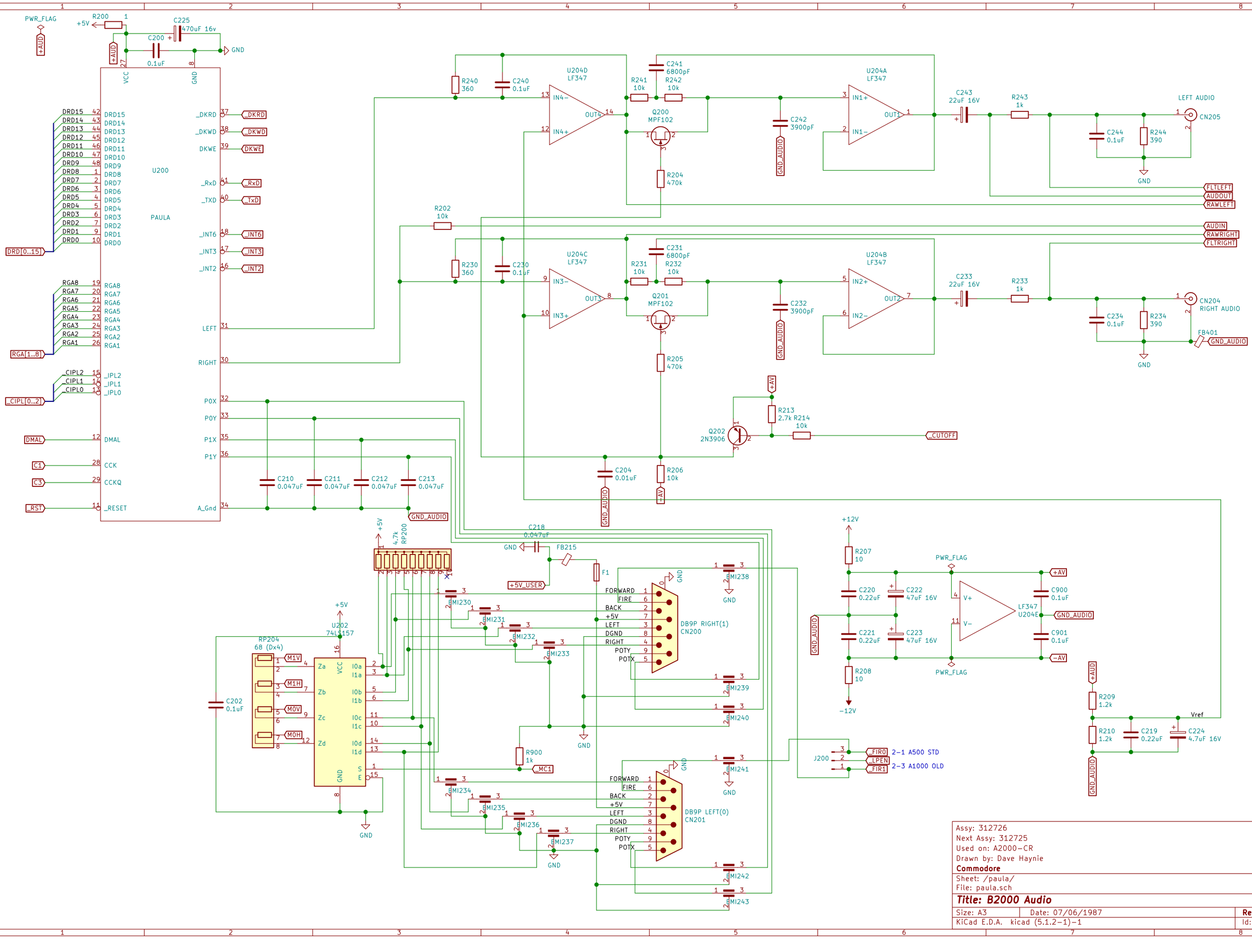

Assy: 312726	
Next Assy: 312725	
Used on: A2000-CR	
Drawn by: Dave Haynie	
Commodore	
Sheet: /paula/	
File: paula.sch	
Title: B2000 Audio	
Size: A3	Date: 07/06/1987 — **Rev: 6.2-a**
KiCad E.D.A. kicad (5.1.2-1)-1	Id: 3/13

rev 6.2 fixes: D802 removed, PST518B added
also that makes the ERC cry but whatever...

RESET

U1 PST518B
U805B LM339
U805A LM339
U805C LM339
U805D LM339
R802 10k
R805 47k
C813 22uF 16V
C814 22uF 16V
C815 0.1uF
C805 0.1uF
RP802 1k
U303B 74F08

POWER LED

Q302 2N3906
R902 4.7k
R307 68
R308 200
C919 0.1uF
CN306

INTERNAL SERIAL

CN304
C320 470pF
C321 470pF

EXTERNAL SERIAL

DB25M CN305
C306 100pF
C317 22uF 16V
C318 22uF 16V
C304 100pF
EMI325
EMI326
EMI327
EMI328
EMI329
EMI330
EMI331
EMI332
EMI333
EMI334
F2

U301 8520
U302B 74LS32
U304 1488
U305 1489
C301 0.1uF
C305 0.01uF
C310 1000pF
C311 1000pF
C312 1000pF
C313 1000pF
C314 1000pF
C315 1000pF
C316 1000pF
Q300 2SC945
R305 10k
R306 10k
D300 1N4148
R302 1k

Assy: 312726	
Next Assy: 312725	
Used on: A2000-CR	
Drawn by: Dave Haynie	
Commodore	
Sheet: /serial/	
File: serial.sch	
Title: B2000 Serial and Reset	
Size: A3	Date: 07/06/1987 — **Rev: 6.2-a**
KiCad E.D.A. kicad (5.1.2-1)-1	Id: 4/13

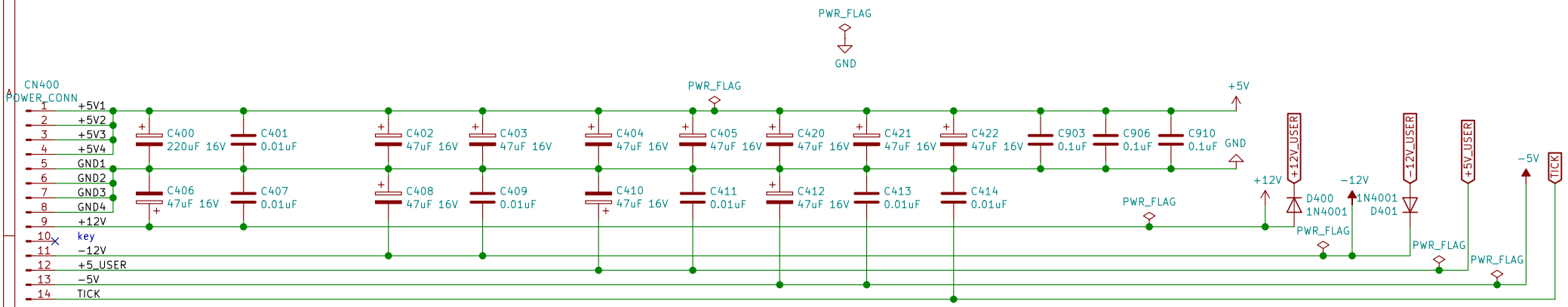

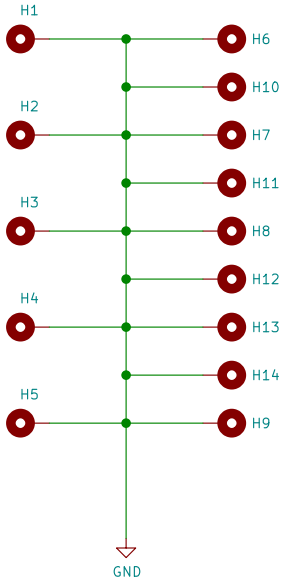

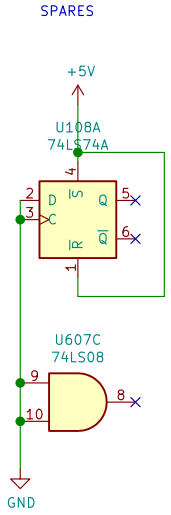

Assy: 312726	
Next Assy: 312725	
Used on: A2000−CR	
Drawn by: Dave Haynie	
Commodore	
Sheet: /power/	
File: power.sch	
Title: B2000 Power	
Size: A4	Date: 07/06/1987
KiCad E.D.A. kicad (5.1.2−1)−1	Id: 5/13

Rev: 6.2−a

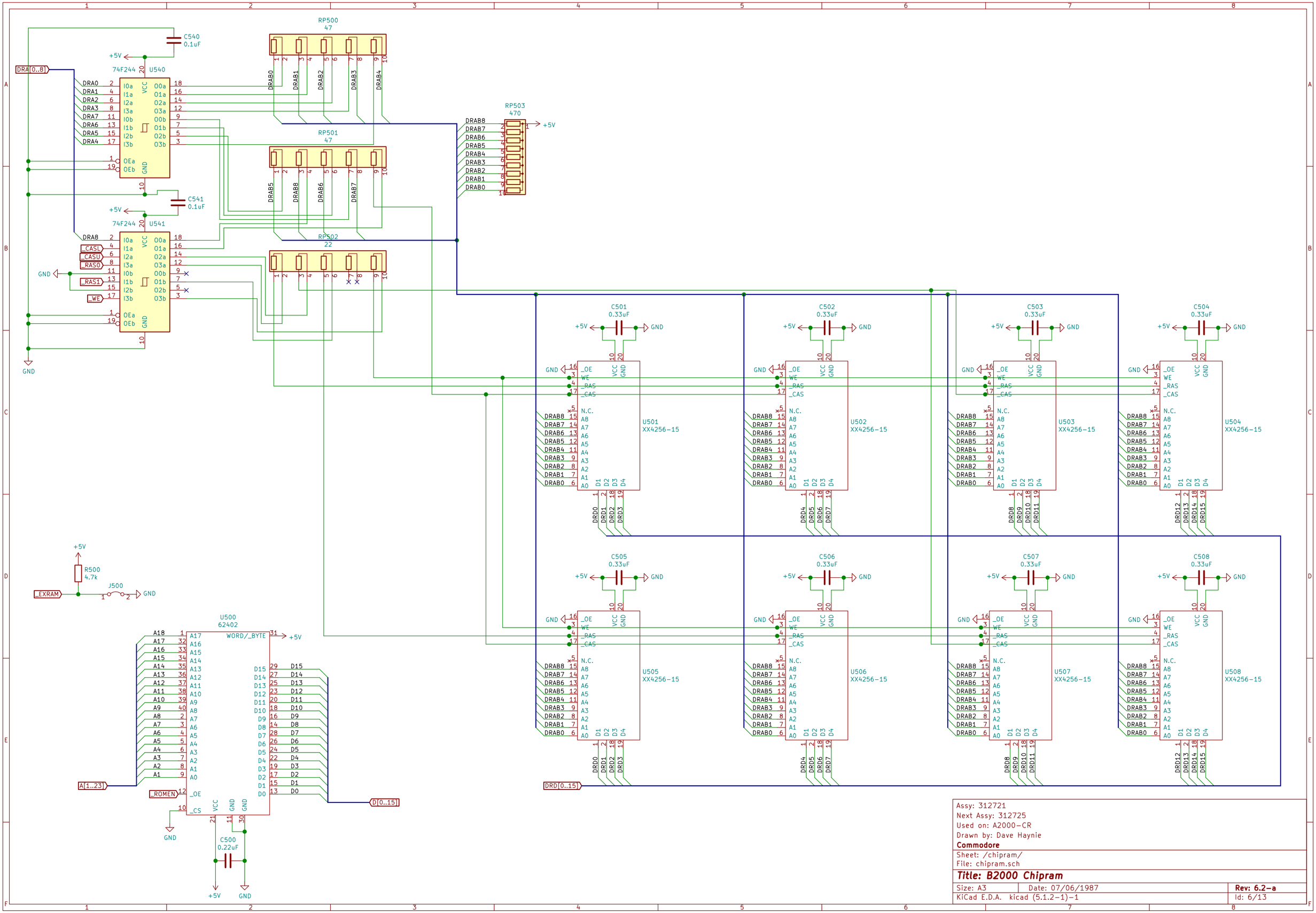
RP500
47
RP501
47
RP502
22
RP503
470
C540
0.1uF
C541
0.1uF
74F244
U540
74F244
U541
DRA[0..8]
_CASL
_CASU
_RAS0
_RAS1
_WE
GND
+5V
C501
0.33uF
C502
0.33uF
C503
0.33uF
C504
0.33uF
C505
0.33uF
C506
0.33uF
C507
0.33uF
C508
0.33uF
U501
XX4256-15
U502
XX4256-15
U503
XX4256-15
U504
XX4256-15
U505
XX4256-15
U506
XX4256-15
U507
XX4256-15
U508
XX4256-15
DRD[0..15]
R500
4.7k
J500
_EXRAM
U500
62402
A[1..23]
_ROMEN
D[0..15]
C500
0.22uF
Assy: 312721
Next Assy: 312725
Used on: A2000-CR
Drawn by: Dave Haynie
Commodore
Sheet: /chipram/
File: chipram.sch
Title: B2000 Chipram
Size: A3
Date: 07/06/1987
Rev: 6.2-a
KiCad E.D.A. kicad (5.1.2-1)-1
Id: 6/13

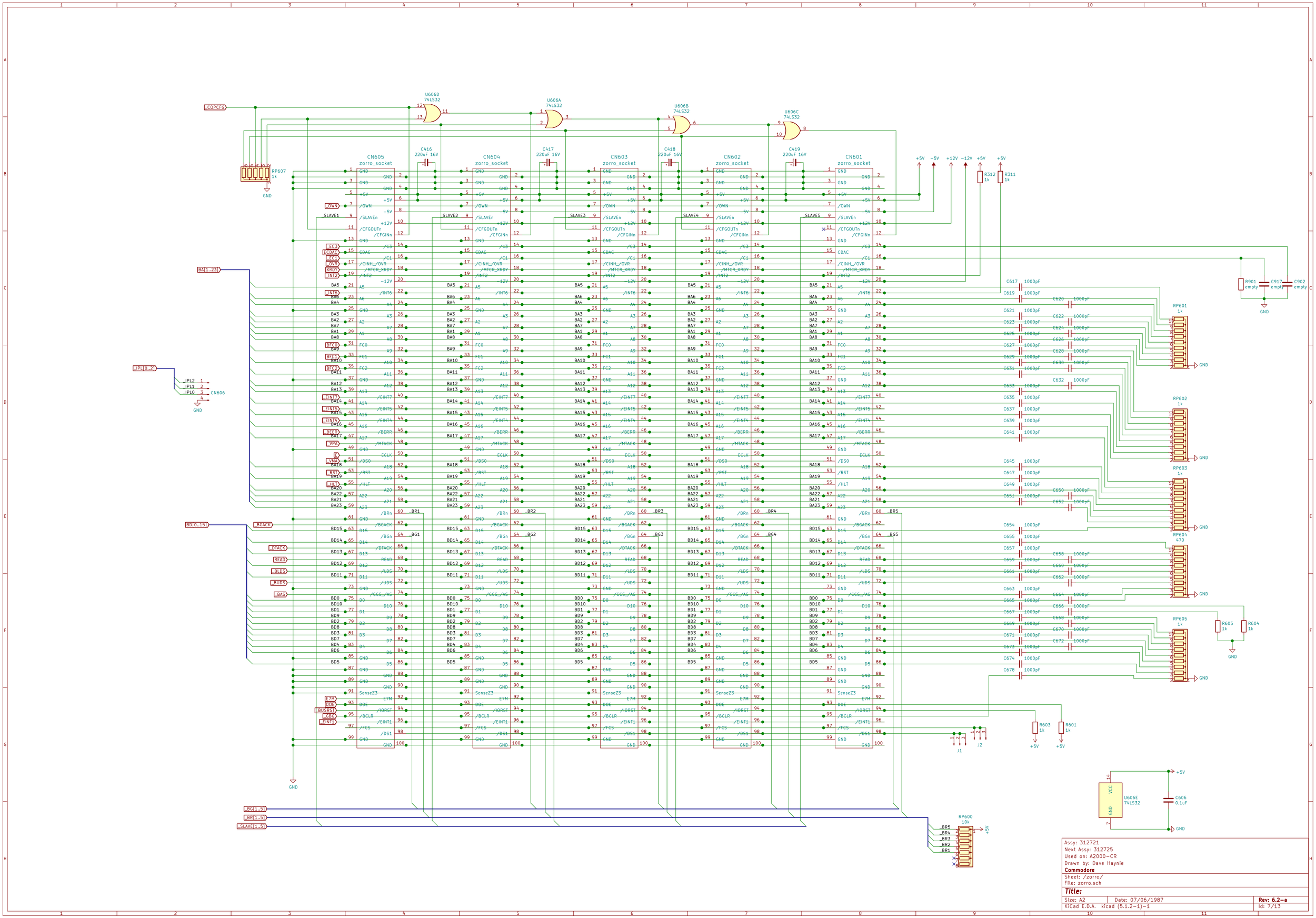

Assy: 312721
Next Assy: 312725
Used on: A2000-CR
Drawn by: Dave Haynie
Commodore
Sheet: /zorro/
File: zorro.sch

Title:

Size: A2	Date: 07/06/1987	**Rev: 6.2-a**
KiCad E.D.A. kicad (5.1.2-1)-1		Id: 7/13

+12V −12V −5V +5V

C703 0.22uF
C704 0.22uF
C702 0.22uF
GND

C705 0.22uF
C701 22uF 16V
C700 0.22uF
GND GND GND

CN700

B1	1	GND	
A1	2		_IOCHK
B2	3		RESDRV
A2	4		D7
B3	5		
A3	6		D6
B4	7		IRQ2
A4	8		D5
B5	9		
A5	10		D4
B6	11		DRQ2
A6	12		D3
B7	13		
A7	14		D2
B8	15		CD_SEL
A8	16		D1
B9	17		
A9	18		D0
B10	19		
A10	20		IOREADY
B11	21		_MEMW
A11	22		AEN
B12	23		_MEMR
A12	24		A19
B13	25		_IOW
A13	26		A18
B14	27		_IOR
A14	28		A17
B15	29		_DACK3
A15	30		A16
B16	31		DRQ3
A16	32		A15
B17	33		_DACK1
A17	34		A14
B18	35		DRQ1
A18	36		A13
B19	37		SMITHEAD
A19	38		A12
B20	39		CLK
A20	40		A11
B21	41		IRQ7
A21	42		A10
B22	43		IRQ6
A22	44		A9
B23	45		IRQ5
A23	46		A8
B24	47		IRQ4
A24	48		A7
B25	49		IRQ3
A25	50		A6
B26	51		_DACK2
A26	52		A5
B27	53		TC
A27	54		A4
B28	55		ALE
A28	56		A3
B29	57		
A29	58		A2
B30	59		OSC
A30	60		A1
B31	61		
A31	62		A0

CN701

B1	1		
A1	2		
B2	3		
A2	4		
B3	5		
A3	6		
B4	7		
A4	8		
B5	9		
A5	10		
B6	11		
A6	12		
B7	13		
A7	14		
B8	15		
A8	16		
B9	17		
A9	18		
B10	19		
A10	20		
B11	21		
A11	22		
B12	23		
A12	24		
B13	25		
A13	26		
B14	27		
A14	28		
B15	29		
A15	30		
B16	31		
A16	32		
B17	33		
A17	34		
B18	35		
A18	36		
B19	37		
A19	38		
B20	39		
A20	40		
B21	41		
A21	42		
B22	43		
A22	44		
B23	45		
A23	46		
B24	47		
A24	48		
B25	49		
A25	50		
B26	51		
A26	52		
B27	53		
A27	54		
B28	55		
A28	56		
B29	57		
A29	58		
B30	59		
A30	60		
B31	61		
A31	62		

CN702

B1	1		
A1	2		
B2	3		
A2	4		
B3	5		
A3	6		
B4	7		
A4	8		
B5	9		
A5	10		
B6	11		
A6	12		
B7	13		
A7	14		
B8	15		
A8	16		
B9	17		
A9	18		
B10	19		
A10	20		
B11	21		
A11	22		
B12	23		
A12	24		
B13	25		
A13	26		
B14	27		
A14	28		
B15	29		
A15	30		
B16	31		
A16	32		
B17	33		
A17	34		
B18	35		
A18	36		
B19	37		
A19	38		
B20	39		
A20	40		
B21	41		
A21	42		
B22	43		
A22	44		
B23	45		
A23	46		
B24	47		
A24	48		
B25	49		
A25	50		
B26	51		
A26	52		
B27	53		
A27	54		
B28	55		
A28	56		
B29	57		
A29	58		
B30	59		
A30	60		
B31	61		
A31	62		

CN703

B1	1		
A1	2		
B2	3		
A2	4		
B3	5		
A3	6		
B4	7		
A4	8		
B5	9		
A5	10		
B6	11		
A6	12		
B7	13		
A7	14		
B8	15		
A8	16		
B9	17		
A9	18		
B10	19		
A10	20		
B11	21		
A11	22		
B12	23		
A12	24		
B13	25		
A13	26		
B14	27		
A14	28		
B15	29		
A15	30		
B16	31		
A16	32		
B17	33		
A17	34		
B18	35		
A18	36		
B19	37		
A19	38		
B20	39		
A20	40		
B21	41		
A21	42		
B22	43		
A22	44		
B23	45		
A23	46		
B24	47		
A24	48		
B25	49		
A25	50		
B26	51		
A26	52		
B27	53		
A27	54		
B28	55		
A28	56		
B29	57		
A29	58		
B30	59		
A30	60		
B31	61		
A31	62		

C711 1000pF
C713 1000pF
C714 1000pF
C716 1000pF
C717 1000pF
C719 1000pF
C720 1000pF
C722 1000pF

RP700 1k
GND

C726 1000pF
C728 1000pF
C730 1000pF
C732 1000pF
C734 1000pF
C736 1000pF
C738 1000pF
C740 1000pF
C742 1000pF
C744 1000pF

RP701 1k
GND

C746 1000pF
C748 1000pF
C750 1000pF
C752 1000pF
C754 1000pF
C756 1000pF
C758 1000pF
C790 1000pF
C791 1000pF
C793 1000pF

RP702 1k
GND

RP705 4.7k
+5V

CN704

D1	1		_MEM16
C1	2		SHBE
D2	3		_IO16
C2	4		LA23
D3	5		IRQ10
C3	6		LA22
D4	7		IRQ11
C4	8		LA21
D5	9		IRQ12
C5	10		LA20
D6	11		IRQ15
C6	12		LA19
D7	13		IRQ14
C7	14		LA18
D8	15		_DACK0
C8	16		LA17
D9	17		DRQ0
C9	18		_MEMR
D10	19		_DACK5
C10	20		_MEMR
D11	21		DRQ5
C11	22		D8
D12	23		_DACK6
C12	24		D9
D13	25		DRQ6
C13	26		D10
D14	27		_DACK7
C14	28		D11
D15	29		DRQ7
C15	30		D12
D16	31		
C16	32		D13
D17	33		_MASTER
C17	34		D14
D18	35		
C18	36		D15

GND

CN705

D1	1		
C1	2		
D2	3		
C2	4		
D3	5		
C3	6		
D4	7		
C4	8		
D5	9		
C5	10		
D6	11		
C6	12		
D7	13		
C7	14		
D8	15		
C8	16		
D9	17		
C9	18		
D10	19		
C10	20		
D11	21		
C11	22		
D12	23		
C12	24		
D13	25		
C13	26		
D14	27		
C14	28		
D15	29		
C15	30		
D16	31		
C16	32		
D17	33		
C17	34		
D18	35		
C18	36		

CN706

D1	1		
C1	2		
D2	3		
C2	4		
D3	5		
C3	6		
D4	7		
C4	8		
D5	9		
C5	10		
D6	11		
C6	12		
D7	13		
C7	14		
D8	15		
C8	16		
D9	17		
C9	18		
D10	19		
C10	20		
D11	21		
C11	22		
D12	23		
C12	24		
D13	25		
C13	26		
D14	27		
C14	28		
D15	29		
C15	30		
D16	31		
C16	32		
D17	33		
C17	34		
D18	35		
C18	36		

CN707

D1	1		
C1	2		
D2	3		
C2	4		
D3	5		
C3	6		
D4	7		
C4	8		
D5	9		
C5	10		
D6	11		
C6	12		
D7	13		
C7	14		
D8	15		
C8	16		
D9	17		
C9	18		
D10	19		
C10	20		
D11	21		
C11	22		
D12	23		
C12	24		
D13	25		
C13	26		
D14	27		
C14	28		
D15	29		
C15	30		
D16	31		
C16	32		
D17	33		
C17	34		
D18	35		
C18	36		

C794 1000pF
C796 1000pF
C760 1000pF
C762 1000pF
C764 1000pF
C766 1000pF
C768 1000pF
C770 1000pF

RP703 1k
GND

C776 1000pF
C778 1000pF
C780 1000pF
C782 1000pF
C784 1000pF
C786 1000pF
C787 1000pF
C789 1000pF

RP704 1k
GND

Note: R6 PCB — C789 is noted C788 and connected to _MASTER instead of D15

Assy: 312721
Next Assy: 312725
Used on: A2000-CR
Drawn by: Dave Haynie
Commodore
Sheet: /pc slots/
File: pc slots.sch

Title:

Size: A2	Date: 07/06/1987	**Rev: 6.2-a**
KiCad E.D.A. kicad (5.1.2-1)-1		Id: 8/13

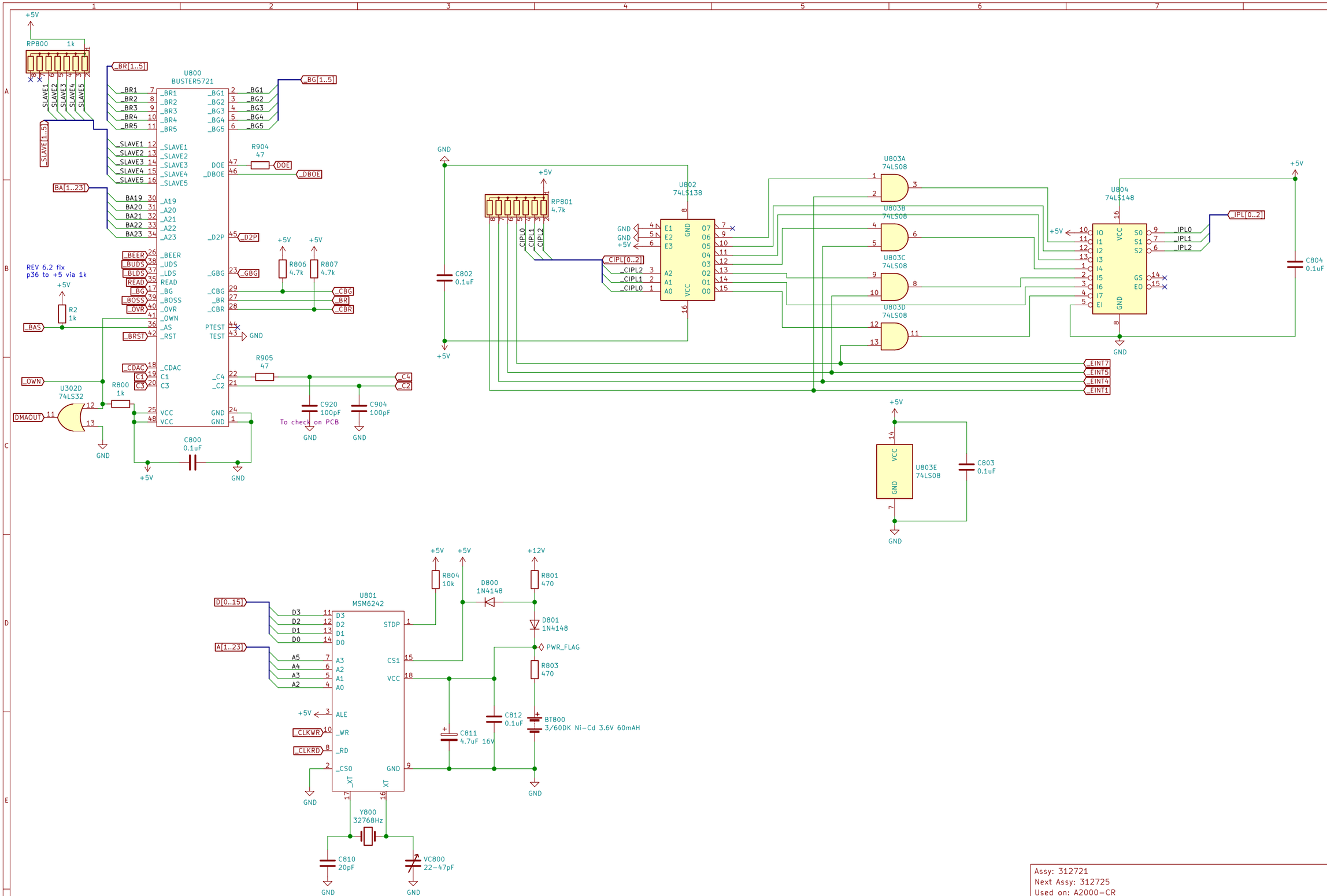

Assy: 312721		
Next Assy: 312725		
Used on: A2000-CR		
Drawn by: Dave Haynie		
Commodore		
Sheet: /expansion logic/		
File: expansion logic.sch		
Title:		
Size: A3	Date: 07/06/1987	**Rev: 6.2-a**
KiCad E.D.A. kicad (5.1.2-1)-1		Id: 9/13

U102A
GARY5719
(FLOPPY FUNCTIONS)
(CONTROL FUNCTIONS)

GND
A[1..23]
C905
100pF
FB102
_LATCH
_OEB
_OEL
A23
A22
A21
A20
A19
A18
A17
R105
22
_VPA
R106
22
_DTACK
_HLT
_RST
_BGACK
J900
R916
4.7k
+5V
_LDS
_UDS
R/W
_AS
_DTACK
_BGACK
_RAMEN
_REGEN
_BUSS
_BLIT
_CDAC
CCK
CCKQ
C907
100pF
C908
100pF
R115
330
+5V
R114
330
_OVR
OVL
XRDY
_ROMEN
_EXRAM
_CLKRD
_CLKWR
U900C
74F00
U900D
74F00
+5V
RP902
47
ECDAC
VCDAC
U107A
74LS74A
U107E
74LS74A
U107B
74LS74A
U107F
74LS74A
U107C
74LS74A
U107D
74LS74A
_CDAC
C1
C3
EC3
FB907
RP102
47
_MC1
VC1
_VC3
DRD[0..15]
DRD15
DRD14
DRD13
DRD12
DRD11
DRD10
DRD9
DRD8
DRD7
DRD6
DRD5
DRD4
DRD3
DRD2
DRD1
DRD0
AGNUS8372
U101
+5V
C101
0.1uF
C415
4.7uF 16V
VSS1
VSS2
VSS3
GND
_CASL
_CASU
_RAS0
_RAS1
_WE
A[1..23]
J101
normal
special
A19
A18
A17
A16
A15
A14
A13
A12
A11
A10
A9
A8
A7
A6
A5
A4
A3
A2
A1
DRA[0..8]
DRA8
DRA7
DRA6
DRA5
DRA4
DRA3
DRA2
DRA1
DRA0
RGA[1..8]
RGA8
RGA7
RGA6
RGA5
RGA4
RGA3
RGA2
RGA1
U900E
74F00
C918
0.1uF
U108C
74LS74A
C108
0.1uF
U107G
74LS74A
C107
0.1uF
U302C
74LS32
RP907
47
E7M
V7M
7M
7MHz
_LPEN
_HSYNC
_VSYNC
_CSYNC
PAL/_NTSC
R101
4.7k
J102
open : PAL
closed : NTSC
_LDS
_UDS
R_W
_AS
_RESET
DMAL
_INT3
_XCLKEN
XCLK
28MHZ
U102C
GARY5719
C102
0.1uF
C110
0.1uF
28.63636MHz
X1
FB101
28M
R109
4.7k
R110
330

Assy: 312721	
Next Assy: 312725	
Used on: A2000-CR	
Drawn by: Dave Haynie	
Commodore	
Sheet: /agnus/	
File: agnus.sch	
Title:	
Size: A3	Date: 07/06/1987
KiCad E.D.A. kicad (5.1.2-1)-1	Id: 10/13
	Rev: 6.2-a

EXT FLOPPY

PARALLEL

REV 6.2 fixes list C909 as removed but I haven't seen
it removed at all on numerous 6.2 boards.
so it is kept here

Assy:	312721
Next Assy:	312725
Used on:	A2000-CR
Drawn by:	Dave Haynie
Commodore	
Sheet:	/parallel/
File:	parallel.sch
Title:	
Size: A3	Date: 07/06/1987
KiCad E.D.A.	kicad (5.1.2-1)-1
Rev: 6.2-a	
Id: 11/13	

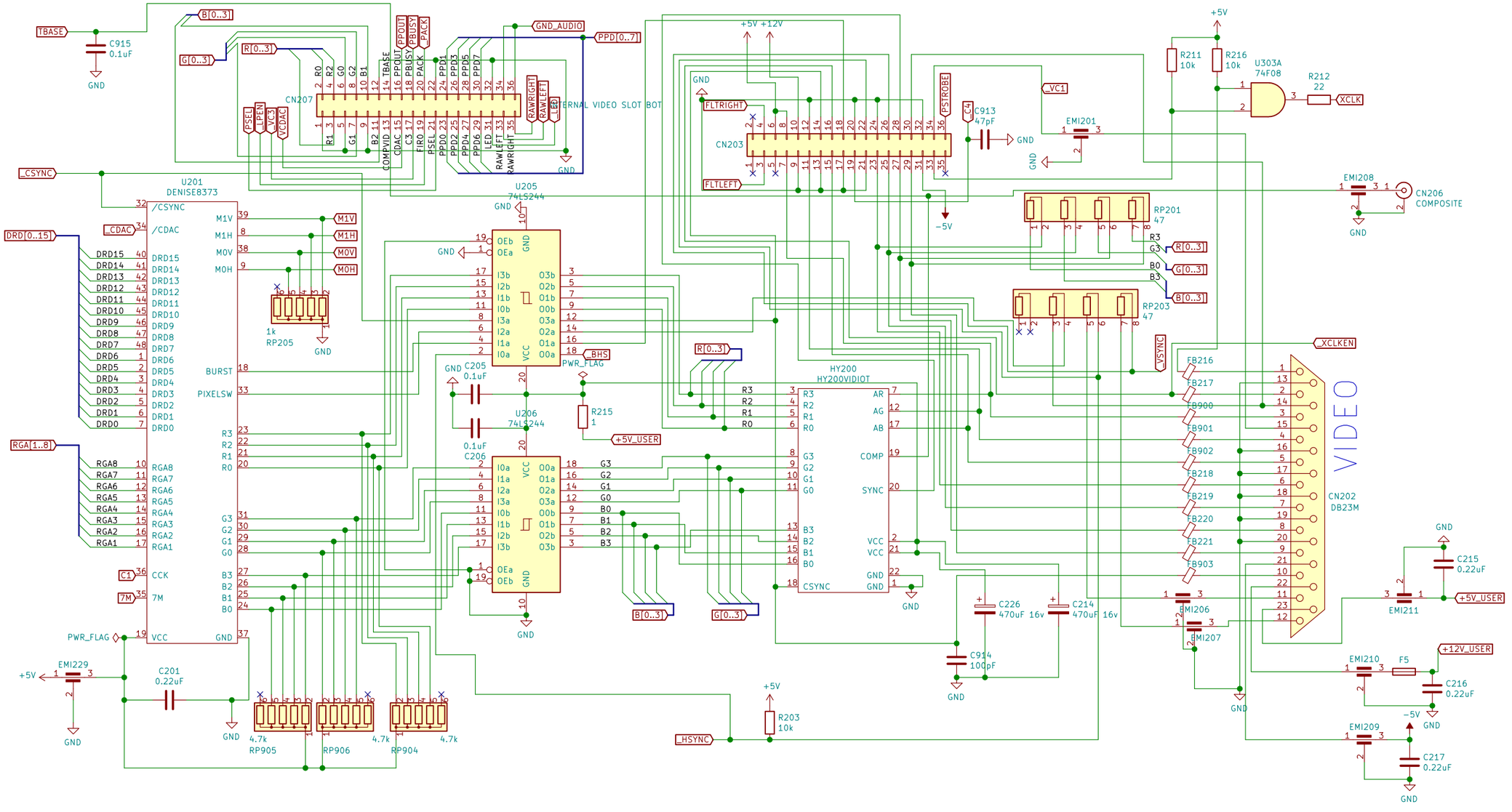

Assy: 312721		
Next Assy: 312725		
Used on: A2000-CR		
Drawn by: Dave Haynie		
Commodore		
Sheet: /denise/		
File: denise.sch		
Title:		
Size: A3	Date: 07/06/1987	**Rev: 6.2-a**
KiCad E.D.A. kicad (5.1.2-1)-1		Id: 12/13

CN600
CO-PROCESSOR_SLOT

+5V-5W-12V

GND

A[1..23]

V7M
Z8M
_COPCFG
_VC3
VCDAC
_VC5
_OVR
XRDY
_INT2
_BOSS
_INT6

A5
A6
A4
A3
A2
A7
A1
A8
A9
A10
A11
A12
A13
A14
A15
A16
A17
A18
A19
A20
A22
A21
A23

FC[0..2]
FC0
FC1
FC2

IPL[0..2]
_IPL0
_IPL1
_IPL2

_BEER
_VPA
E
_VMA
_RST
_HLT

_CBR
_BGACK
_CBG
_DTACK
R_W
_LDS
_UDS
_AS

D15
D14
D13
D12
D11
D10
D9
D8
D3
D7
D4
D6
D5
D1
D2
D0

D[0..15]

U600
74LS245

U601
74LS245

U602
74ALS245

A7 A6 A5 A4 A3 A2 A1
A8 A9 A10 A11 A12 A13 A14 A15
A16 A17 A18 A19 A20 A21 A22 A23

BA7 BA6 BA5 BA4 BA3 BA2 BA1
BA8 BA9 BA10 BA11 BA12 BA13 BA14 BA15
BA16 BA17 BA18 BA19 BA20 BA21 BA22 BA23

BA[1..23]

C600 0.1uF
C601 0.1uF
C602 0.1uF

REV 6.2 fixes: RP900 and RP901, 3.3k both, connected to D[0..15] were removed
And instead connected directly to U603 and U604

U603
74LS245

U604
74LS245

D7 D6 D5 D4 D3 D2 D1 D0
D15 D14 D13 D12 D11 D10 D9 D8

BD0 BD1 BD2 BD3 BD4 BD5 BD6 BD7
BD15 BD14 BD13 BD12 BD11 BD10 BD9 BD8

BD[0..15]

3.3k
RPF603
RPF604

_D2P
_DBOE

C603 0.1uF
C604 0.1uF

U605
74ALS245

DMAOUT

FC0 FC1 FC2

C605 0.1uF

RP908
1k

RP903
1k

BAS
BUDS
BLDS
READ
BFC0
BFC1
BFC2

+5V
GND

Assy: 312721		
Next Assy: 312725		
Used on: A2000-CR		
Drawn by: Dave Haynie		
Commodore		
Sheet: /coprocessor slot/		
File: coprocessor slot.sch		
Title:		
Size: A2	Date: 07/06/1987	**Rev: 6.2-a**
KiCad E.D.A. kicad (5.1.2-1)-1		Id: 13/13