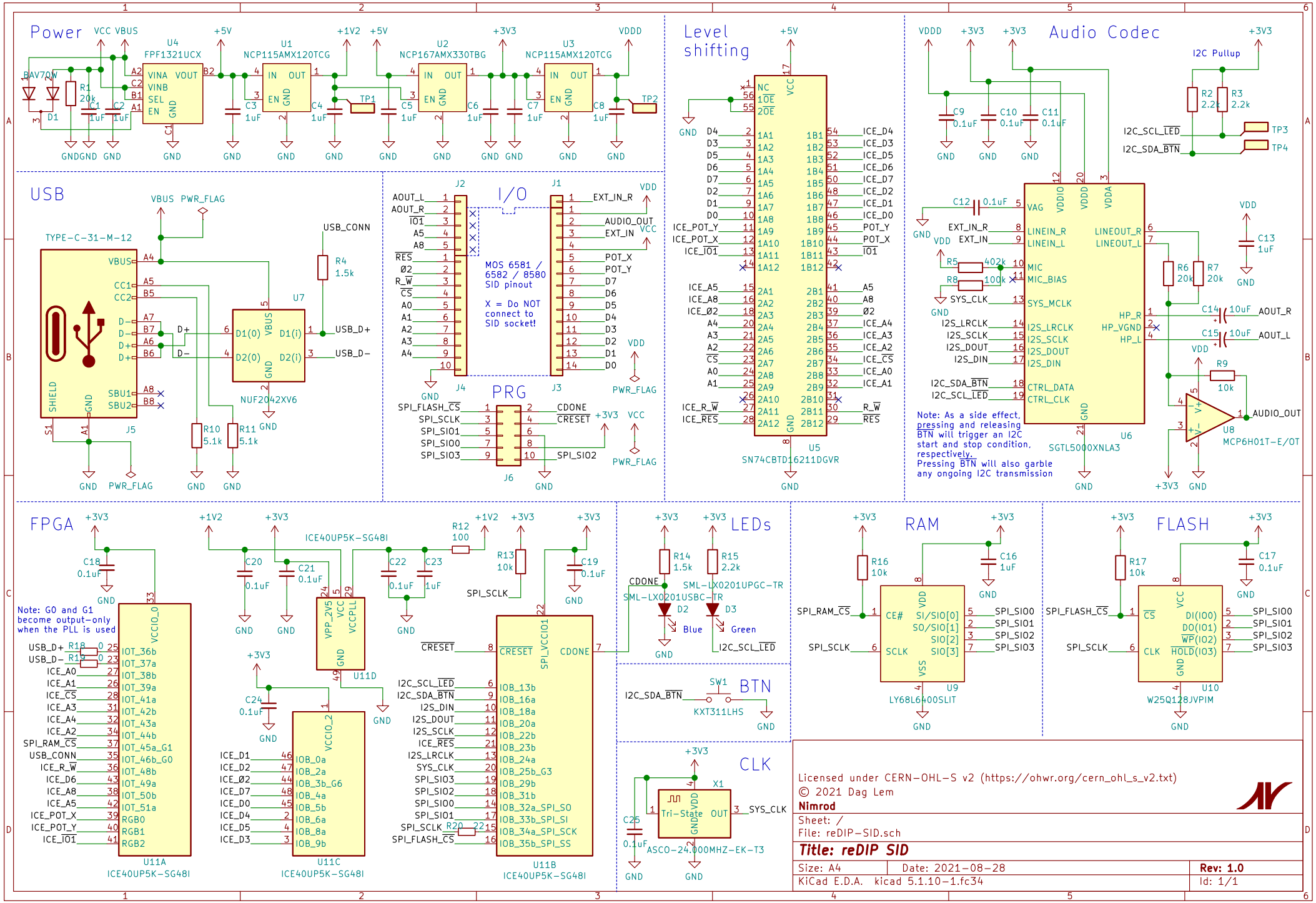
Power
U4
FPF1321UCX
U1
NCP115AMX120TCG
U2
NCP167AMX330TBG
U3
NCP115AMX120TCG
BAV70W
D1
R1 20k
C1 1uF
C2 1uF
C3 1uF
C4 1uF
C5 1uF
C6 1uF
C7 1uF
C8 1uF
TP1
TP2
VCC VBUS
+5V
+1V2
+3V3
VDDD
GND
USB
TYPE-C-31-M-12
J5
VBUS PWR_FLAG
USB_CONN
R4 1.5k
U7
NUF2042XV6
USB_D+
USB_D-
R10 5.1k
R11 5.1k
I/O
J2
J1
J4
J3
MOS 6581 / 6582 / 8580 SID pinout
X = Do NOT connect to SID socket!
AOUT_L
AOUT_R
EXT_IN_R
AUDIO_OUT
EXT_IN
POT_X
POT_Y
PRG
J6
SPI_FLASH_CS
SPI_SCLK
SPI_SIO1
SPI_SIO0
SPI_SIO3
SPI_SIO2
CDONE
CRESET
Level shifting
SN74CBTD16211DGVR
U5
ICE_POT_Y
ICE_POT_X
ICE_IO1
ICE_R_W
ICE_RES
Audio Codec
SGTL5000XNLA3
U6
I2C Pullup
R2 2.2k
R3 2.2k
TP3
TP4
I2C_SCL_LED
I2C_SDA_BTN
C9 0.1uF
C10 0.1uF
C11 0.1uF
C12 0.1uF
C13 1uF
R5 402k
R8 100k
SYS_CLK
I2S_LRCLK
I2S_SCLK
I2S_DOUT
I2S_DIN
R6 20k
R7 20k
C14 10uF
C15 10uF
R9 10k
U8
MCP6H01T-E/OT
Note: As a side effect, pressing and releasing BTN will trigger an I2C start and stop condition, respectively. Pressing BTN will also garble any ongoing I2C transmission
FPGA
ICE40UP5K-SG48I
U11A
U11B
U11C
U11D
C18 0.1uF
C19 0.1uF
C20 0.1uF
C21 0.1uF
C22 0.1uF
C23 1uF
C24 0.1uF
R12 100
R13 10k
R18 0
R19 0
Note: G0 and G1 become output-only when the PLL is used
USB_D+
USB_D-
ICE_A0
ICE_A1
ICE_CS
ICE_A3
ICE_A4
ICE_A2
SPI_RAM_CS
USB_CONN
ICE_R_W
ICE_D6
ICE_A8
ICE_A5
ICE_POT_X
ICE_POT_Y
ICE_IO1
ICE_D1
ICE_D2
ICE_Ø2
ICE_D7
ICE_D0
ICE_D4
ICE_D5
ICE_D3
I2C_SCL_LED
I2C_SDA_BTN
I2S_DIN
I2S_DOUT
I2S_SCLK
ICE_RES
I2S_LRCLK
SYS_CLK
SPI_SIO3
SPI_SIO2
SPI_SIO0
SPI_SIO1
SPI_SCLK
SPI_FLASH_CS
R20
LEDs
R14 1.5k
R15 2.2k
CDONE
SML-LX0201UPGC-TR
SML-LX0201USBC-TR
D2
Blue
D3
Green
BTN
SW1
KXT311LHS
CLK
X1
Tri-State
OUT
ASCO-24.000MHZ-EK-T3
C26 0.1uF
RAM
R16 10k
C16 1uF
U9
LY68L6400SLIT
SPI_RAM_CS
SPI_SCLK
FLASH
R17 10k
C17 0.1uF
U10
W25Q128JVPIM
SPI_FLASH_CS
SPI_SCLK
SPI_SIO0
SPI_SIO1
SPI_SIO2
SPI_SIO3
Licensed under CERN-OHL-S v2 (https://ohwr.org/cern_ohl_s_v2.txt)
© 2021 Dag Lem
Nimrod
Sheet: /
File: reDIP-SID.sch
Title: reDIP SID
Size: A4
Date: 2021-08-28
Rev: 1.0
KiCad E.D.A. kicad 5.1.10-1.fc34
Id: 1/1